Google

This is a digital copy of a book that was preserved for generations on library shelves before it was carefully scanned by Google as part of a project to make the world's books discoverable online.

It has survived long enough for the copyright to expire and the book to enter the public domain. A public domain book is one that was never subject to copyright or whose legal copyright term has expired. Whether a book is in the public domain may vary country to country. Public domain books are our gateways to the past, representing a wealth of history, culture and knowledge that's often difficult to discover.

Marks, notations and other marginalia present in the original volume will appear in this file - a reminder of this book's long journey from the publisher to a library and finally to you.

Usage guidelines

Google is proud to partner with libraries to digitize public domain materials and make them widely accessible. Public domain books belong to the public and we are merely their custodians. Nevertheless, this work is expensive, so in order to keep providing this resource, we have taken steps to prevent abuse by commercial parties, including placing technical restrictions on automated querying.

We also ask that you:

+ *Make non-commercial use of the files* We designed Google Book Search for use by individuals, and we request that you use these files for personal, non-commercial purposes.

+ *Refrain from automated querying* Do not send automated queries of any sort to Google's system: If you are conducting research on machine translation, optical character recognition or other areas where access to a large amount of text is helpful, please contact us. We encourage the use of public domain materials for these purposes and may be able to help.

+ *Maintain attribution* The Google "watermark" you see on each file is essential for informing people about this project and helping them find additional materials through Google Book Search. Please do not remove it.

+ *Keep it legal* Whatever your use, remember that you are responsible for ensuring that what you are doing is legal. Do not assume that just because we believe a book is in the public domain for users in the United States, that the work is also in the public domain for users in other countries. Whether a book is still in copyright varies from country to country, and we can't offer guidance on whether any specific use of any specific book is allowed. Please do not assume that a book's appearance in Google Book Search means it can be used in any manner anywhere in the world. Copyright infringement liability can be quite severe.

About Google Book Search

Google's mission is to organize the world's information and to make it universally accessible and useful. Google Book Search helps readers discover the world's books while helping authors and publishers reach new audiences. You can search through the full text of this book on the web at http://books.google.com/

Library
of the
University of Wisconsin

MECHANICAL EQUIPMENT OF BUILDINGS

Vol. I

HEATING AND VENTILATION

621 pages, 7 by 9¼, illustrated by many figures and folding plates. Flexible Binding, $4.00 net.

Vol. II

POWER PLANTS AND REFRIGERATION

766 pages, 7 by 9¼, Properly Illustrated. Flexible Binding, $5.00 net.

Vol. III—*In Preparation*

MISCELLANEOUS BUILDING EQUIPMENT

Including Lighting, Elevators, Vacuum Cleaning, Sprinkler Systems, Plumbing, etc.

MECHANICAL EQUIPMENT OF BUILDINGS

A REFERENCE BOOK FOR ENGINEERS AND ARCHITECTS

BY

LOUIS ALLEN HARDING, B.S., M.E.

Member American Society Mechanical Engineers; Member American Society Heating and Ventilating Engineers; Formerly Professor of Mechanical Engineering, Penna. State College; Professor of Experimental Mechanical Engineering, University of Illinois; Chief Engineer and Member Firm John W. Cowper Co., Buffalo, N. Y.

AND

ARTHUR CUTTS WILLARD, S.B.

Member American Society Heating and Ventilating Engineers; Formerly Assistant Professor of Mechanical Engineering, George Washington University, and Sanitary and Heating Engineer, U. S. War Department; Assistant Professor of Heating and Ventilation, University of Illinois

VOLUME II

POWER PLANTS AND REFRIGERATION

FIRST EDITION
FIRST THOUSAND

NEW YORK
JOHN WILEY & SONS, INC.
LONDON: CHAPMAN & HALL, LIMITED
1917

Copyright, 1917, by
LOUIS ALLEN HARDING
AND
ARTHUR CUTTS WILLARD

PUBLISHERS PRINTING COMPANY, NEW YORK

216175
MAR 16 1918
SXM
H21
2
6710076

PREFACE TO VOLUME II

THIS book is a new departure in the literature on the mechanical equipment of buildings. It proposes to deal not only with power plants and refrigeration, to which this volume is devoted, but also with the heating and ventilation of buildings which is considered in Volume I already published. In addition to these two volumes a third volume on elevators, lighting systems, sprinkler systems, vacuum cleaning and plumbing is now in preparation.

In order to make Volume II complete in itself it has been found advisable to reprint (with minor changes) the Chapters on Heat; Water, Steam and Air; and Fuels and Combustion, and parts of two other chapters, all taken from Volume I. This means that about 100 pages have been added to this volume in order to make it a complete individual unit avoiding the necessity of constant reference to Volume I.

The object of the authors is to produce a reference book for engineers, which will contain sufficient theoretical and commercial data for practical use in the designing room, and at the same time serve to show the student of this subject the relation between the theoretical principles involved and their practical application to actual problems.

All available sources of information relating to this field of engineering have been drawn upon, and credit given in the text, wherever such information is introduced. The authors have found it necessary, in their own experience, to make extensive use of manufacturers' data in designing the various mechanical systems or plants required in modern buildings. They have therefore not hesitated to include such data in the text in order to illustrate and facilitate the design of similar systems in each subject treated.

References to specific makes of such equipment have not been intended as in any sense exclusive of other equipment of the same sort, but merely as indicating that the equipment named and described is as satisfactory as any to be obtained in the market.

The authors are especially indebted to *Prof. G. A. Goodenough* for many valuable suggestions, as well as permission to make use of his latest tables of the properties of steam and ammonia and also of air and vapor mixtures.

THE AUTHORS.

URBANA, ILL.,
April, 1917.

TABLE OF CONTENTS

VOLUME II

POWER PLANTS AND REFRIGERATION

CHAPTER I

PAGE

PHYSICAL UNITS AND THE MEASUREMENT OF HEAT 3–15

CHAPTER II

WATER, STEAM AND AIR 16–51

CHAPTER III

FUELS AND COMBUSTION 52–73

CHAPTER IV

BOILERS AND RULES FOR CONSTRUCTION 74–141

CHAPTER V

MECHANICAL STOKERS 142–147

CHAPTER VI

SUPERHEATERS AND ECONOMIZERS 148–158

CHAPTER VII

CHIMNEYS FOR POWER BOILERS 159–195

CHAPTER VIII

MECHANICAL DRAFT 196–207

CHAPTER IX

FEED-WATER HEATERS AND FEED-WATER PURIFICATION 208–228

CHAPTER X

STEAM ENGINES 229–294

CHAPTER XI

STEAM TURBINES 295–338

CHAPTER XII

PAGE

PUMPS 339–385

CHAPTER XIII

STEAM CONDENSERS 386–440

CHAPTER XIV

COOLING PONDS AND TOWERS 441–464

CHAPTER XV

PIPE, FITTINGS, VALVES, COVERINGS AND ACCESSORIES 465–524

CHAPTER XVI

POWER-PLANT PIPING 525–559

CHAPTER XVII

ARRANGEMENT OF STEAM POWER PLANTS 560–579

CHAPTER XVIII

COAL AND ASH HANDLING MACHINERY 580–614

CHAPTER XIX

ISOLATED POWER-PLANT DATA 615–629

CHAPTER XX

COST OF STEAM AND GAS POWER EQUIPMENT 630–638

CHAPTER XXI

UNITS EMPLOYED IN REFRIGERATION PRACTICE 639–642

CHAPTER XXII

HEAT TRANSMISSION AND CONSTRUCTION OF COLD STORAGE WALLS . . . 643–664

CHAPTER XXIII

HEAT TRANSMISSION OF PIPING AS USED IN REFRIGERATION PRACTICE . . . 665–669

CHAPTER XXIV

METHODS OF PRODUCING ARTIFICIAL REFRIGERATION 670–671

CHAPTER XXV

PAGE

COLD AIR MACHINES 672–674

CHAPTER XXVI

COMPRESSION MACHINES 675–694

CHAPTER XXVII

VACUUM MACHINES 695–699

CHAPTER XXVIII

AMMONIA CONDENSERS 700–705

CHAPTER XXIX

BRINE CIRCULATING SYSTEM 706–712

CHAPTER XXX

THE AMMONIA ABSORPTION MACHINE 713–728

CHAPTER XXXI

ICE-MANUFACTURING PLANTS 729–747

The authors announce that the Rules for Construction and Installation of Steam Boilers, printed on page 122 *et sq.*, are extracts from the Progress Report Boiler Code Committee, the final Report not being available at the time the manuscript for this book was prepared.

The final Report has since been published and is now available, and copies may be secured from the Secretary of the A. S. M. E.

Mechanical Equipment of Buildings

VOLUME II

POWER PLANTS AND REFRIGERATION

CHAPTER I.

PHYSICAL UNITS AND THE MEASUREMENT OF HEAT

FUNDAMENTAL UNITS

MODERN engineering practice depends on the correct application of basic principles already developed and established in such branches of physical science as mechanics, thermodynamics, hydraulics, physics and chemistry. As reference will be made to these fundamental principles from time to time, it is necessary to define the units in which the various quantities dealt with will be measured.

In this country the system of units in general use by engineers is known as the *Foot-Pound-Second System*, and the following definitions and examples will show the significance of each unit. A table of equivalents (Table 2) is also given, so that the value of the more general compound units can be found in terms of various other units.

Definitions of Units and Terms Employed in the F. P. S. System. The unit of time is the second, which is equal to $\frac{1}{86{,}400}$ part of the mean solar day. t = *time*. Time is also expressed in minutes and hours.

L = *length*. The unit of length is the foot = 0.3048 meter.

W = *weight*. The unit of weight is the pound = 0.4536 kilogram.

A = *area*. The unit of area is the square foot. The unit often used is the square inch.

V = *volume*. The unit of volume is the cubic foot. Volume equals area $\times$ length = $A \times L$. In calculations involving quantity of air required Q is often used for cu. ft.

Example. The volume displaced per stroke by the plunger of a pump, if the diameter is 6″ and the stroke is 12″, is $\frac{1}{4}\pi \times 6^2 \times 12 = 339.29$ cubic inches or 0.196 cu. ft.

If the plunger makes 30 "working" strokes (not revolutions) per minute, then the plunger "displacement" per minute is $0.196 \times 30 = 5.88$ cu. ft. One U. S. gallon = 231 cu. inches or 0.1336 cu. ft. This pump will therefore theoretically deliver $\frac{5.88}{0.1336}$ or 44 gals. per min. The actual delivery of the pump will be somewhat less owing to "slip," which is the leakage back through the pump valves, around the plunger, and that due to imperfect filling of the pump cylinder on the suction stroke.

D = *density*. The weight of a unit volume (1 cu. ft.) of a substance is called its "density." The density of water at 70° F. is 62.3 lb. per cu. ft., and at 60° F. = 62.37.

The densities of the following liquids at 60° F. are:
Petroleum: 48.7 to 54.9 lb. per cu. ft.

Mercury: 848.7 lb. per cu. ft. Specific gravity = 848.7/62.37 = 13.6.

The pump in the preceding example would, therefore, handle 5.88 × 62.3 or 366 lb. of water per minute.

If the water end of the pump were operated by a steam cylinder having a displacement of 0.349 cu. ft. per stroke and took steam at the same pressure for the full stroke as in the "direct acting" type and assuming that the steam pressure were 100 lb. gage, we find from the steam tables that the density of steam at this pressure is 0.2565 lb. The "steam consumption" of the pump, therefore, would be 0.2565 × 0.349 × 30 × 60 or 161.6 lb. per hr. theoretically.

v = *velocity*. The rate of motion of a body is measured by the distance passed over in a unit time. Velocity is expressed in ft. per sec.

a = *acceleration*. The rate of change of velocity measured in ft. per sec. is termed acceleration, and is stated in ft. per sec. per sec. (generally expressed, ft. per sec.^{2}). Acceleration may be either positive or negative, depending upon whether the speed of the moving body is increasing or decreasing. The uniform acceleration due to gravity, denoted by the symbol g, is the rate of gain in velocity of a freely falling body and is 32.174 ft. per sec.^{2} The value of g is generally taken as 32.2.

M = *mass*. The expression W/g is termed "mass." A unit of mass is the quantity of matter in pounds to which the unit of force (1 lb.) will give an acceleration of 1 ft. per sec.^{2}

Relation between Velocity, Acceleration, Time, and Space Passed Over: When the accelerating force is uniform the acceleration will be uniform. The velocity at the end of t seconds, if the body starts from rest, will be

$$v = at; \text{ whence } a = \frac{v}{t}, \text{ and } t = \frac{v}{a}$$

The space passed over at the end of t seconds is equal to the product of the mean velocity and the time, or $L = \frac{1}{2} vt$, or $L = \frac{1}{2} at^2$.

A force of 1 pound when applied to a mass whose weight is 32.17 pounds will produce an acceleration of 1 ft. per sec.^{2} when the mass is moving against no resistance (frictionless motion). A force of F pounds acting on a mass of one pound will produce an acceleration of $F \times 32.17$ ft. per sec.^{2}

The relation between force, mass, and acceleration is given by the equation $F = Ma = Wa/g$.

Substituting the value of a in terms of v we obtain

$$F = \frac{W v}{g t}$$

U = *energy* or *work*. The unit of work is the foot pound, and is the quantity of energy expended or the work performed by a force of 1 pound moving through a distance of 1 foot in the line of action of the force.

Power is the rate of doing work. Note that "power" involves the factor "time" and is equal to the amount of work done divided by the time required to do this work.

h.p. = *Horsepower*. The unit of power is the "horsepower" and is the performance of work at the rate of 550 ft.-lb. per sec. or 33,000 ft.-lb. per minute.

Example. Required the theoretical work and horsepower developed by the water end of the pump in the preceding example if the head or the height pumped against is 200 ft., assuming no frictional resistance to be overcome.

The work U_m performed per minute is the lifting of the weight of water, W = 366 lb. per minute, through a height of 200 ft. is

$$U_m = 366 \times 200 = 73{,}200 \text{ ft. lb. per min. and h.p.} = \frac{U_m}{33{,}000} = \frac{73{,}200}{33{,}000} = 2.22.$$

The actual power required will be somewhat greater, as we have neglected the force required to overcome frictional resistance, and the force required to accelerate the water from a state of rest to the velocity at which it is delivered.

The total force F required on the plunger will be the total pressure produced on the plunger by the water column, neglecting friction and the accelerating force.

The pressure per unit area produced by the water column is equal to the height H in ft. multiplied by the density D of the water or $P = H\,D = 200 \times 62.3 = 12{,}460$ lb. per sq. ft., or $p = \frac{12{,}460}{144} = 86.5$ lb. per sq. in.

If A = area of plunger in sq. in., then $F = p\,A$ or $86.5 \times 28.27 = 2{,}446$ lb.

The work performed per stroke of the plunger is $U = F\,L$ in which L is the length of the stroke in ft. or $U = 2{,}446 \times 1 = 2{,}446$ ft.-lb.

The work per min. $= U_m = 2{,}446 \times 30 = 73{,}380$ and the power required is $\frac{73{,}380}{33{,}000} = 2.22$ h.p.

Measurement of Pressure. It is customary to measure pressure by means of gages which in reality only indicate the difference between the pressure being measured and the pressure of the atmosphere (barometric pressure) at the same time and place. These gages may indicate either a higher or lower pressure than that of the atmosphere; in the former case they are known as *pressure gages* and in the latter as *vacuum* or *draft gages*.

Pressure and Vacuum Gages. The most common type of pressure gage (Fig. 1) is provided with a flexible hollow brass tube of oval cross section known as a *Bourdon* tube. When subjected to pressure, this tube tends to straighten out and thus causes a sector of a gear to mesh with a small pinion on the same shaft with the indicating hand or pointer and rotate the latter a corresponding amount. The pointer is placed just in front of a graduated dial (not shown in the figure) from which the pressure may be read in suitable pressure units such as pounds per square inch.

FIG. 1. SINGLE SPRING PRESSURE GAGE. INTERIOR VIEW.

These gages may also be used for indicating vacuum or pressures less than that of the atmosphere.

Draft Gages. The measurement of pressures but slightly above or below the atmospheric pressure (barometric pressure) is usually accomplished by the use of a draft *gage* (Fig. 2) connected at the stop cock on the right hand side.

This is essentially a U tube, containing either water, kerosene, alcohol or mercury, mounted upon a graduated scale, and reading either in inches of fluid or in pounds or ounces per square inch. Since the pressure indicated is a differential one, due to the left hand leg being open to the air, the reading must be obtained by adding the depression in the left hand leg to the elevation in the right hand leg; using zero as the reference point in both cases. Thus, for the gage shown in Fig. 2 the reading is $0.95 + 1.05 = 2.00$ inches of mercury from which the vacuum or pressure below the atmosphere in pounds or ounces per square inch may be readily calculated.

Barometers. The pressure of the atmosphere is usually measured by a *mercurial barometer* (Fig. 3) which in its simplest form consists of a glass tube about 3 feet long, closed at one end, which after being filled with mercury is inverted in a shallow bath of mercury. The pressure of the atmosphere at sea level maintains the mercury column in the tube about 30″ above the level in the cistern. The barometric height or length of this column of mercury varies with the altitude above or below sea level.

When the mercury in the tube falls, that in the cistern rises in corresponding proportion, and vice versa, so that there is an ever-varying relation between the level of the mercury in the tube and the mercury in the cistern, which affects the accuracy of the readings. It is therefore necessary before reading the height of the mercury column on the stem of the barometer (Fig. 4) by means of the movable vernier C to adjust the level of the mercury in the cistern.

The cistern (Fig. 5) consists primarily of a heavy walled glass cylinder AA allowing the surface of the mercury B to be clearly seen.

This cylinder is securely held between bolsters CC in a movable frame suitably mounted in the base of the instrument.

The bottom of the frame D is connected with the threaded stem E which ends in the knurled

FIG. 2. DRAFT GAGE.

FIG. 3. SIMPLE BAROMETER.

nut F, by means of which the cistern is moved vertically thus raising or lowering the mercury level and adjusting same to the tip of the ivory pointer G, which is the zero of the scale.

All standard or observatory barometers of the mercurial type possess this adjustable feature. Barometers of other types, such as the *Aneroid barometer*, must be frequently compared with a standard mercurial barometer in order to check the accuracy of their readings.

Barometric Pressure. By barometric height is meant the height of a column of pure mercury at 32° F. which just balances the pressure of the atmosphere at the time and place of the observation. The *standard* or *normal barometric pressure* is defined as the pressure of a column of pure mercury 760 mm. (29.92 inches) high at 32° F. This is the normal barometric pressure at latitude 45° and sea level. Since the weight of 1 cu. in of mercury under these same conditions is 0.491 lb. then the normal barometric pressure equals the height of mercury column × weight per cubic inch, = 29.92 × 0.491, or 14.7 lb. per sq. in.

This pressure of 14.7 lb. per sq. in. is known as the *absolute pressure* of the atmosphere at latitude 45° and sea level. Now, since the ordinary pressure gage measures only pressures above or below that of the atmosphere it is necessary to *add the barometric pressure* at the place in question *to the gage reading to obtain the total absolute pressure* corresponding to the pressure indicated by the gage. That is: absolute pressure = barometric pressure + gage pressure.

The pressures used must be in the same units, and may be expressed in pounds per sq. ft., P or *specific pressure*, or in pounds per sq. in., p, the usual units for expressing *gage pressure* $P = 144\ p$. Also pressure in inches of mercury × 0.491 = pressure in pounds per sq. in.

HEAT

Definition of Heat. *Heat is a form of energy*, and not a substance. It is, in fact, the kinetic and potential energy of the molecules of which all substances, whether solid, liquid, or gaseous, are composed. Whenever the vibratory motion of the molecules composing a body of given mass is increased from any cause the *thermal kinetic energy* is increased. The temperature of the body rises, its *sensible heat* increases, and the body feels warmer.

The *thermal potential energy* of a body of given mass may be increased by causing it to expand or change its state, thus separating the molecules against their mutual attractions and requiring the expenditure of work or its equivalent in heat. The work expended in separating the molecules due to expansion, or in changing their state of aggregation, as in changing from solid to liquid, is stored in the body as potential energy. There is no change in temperature during changes of state, hence the kinetic energy and the temperature remain constant.

Furthermore, the thermal kinetic energy of a body for a given rate of vibration of the molecules will vary with their number or the mass of the body. Hence if the rate of this molecular vibration is the same in two different masses of the same substance, they will have the same *heat intensity* or *temperature*, but the larger mass will have the greater *heat content* or possess more *heat energy*.

Measurement of Temperature. (Thermometry.) *Intensity* of heat is measured by *thermometers* and *pyrometers*, the latter being used for high temperatures, above 400° to 500° F. In engineering work mercurial thermometers are very largely employed. These depend upon the uniform expansion of mercury to indicate changes in temperature. The unit of measurement is called a *degree*, and is capable of very exact determination, provided two points, at which the heat intensity is always constant, can be used as a base or reference for calibration. The melting-point of ice and boiling-point of water at atmospheric pressure are usually selected as bases, and the uniform expansion of the mercury between these two points is indicated on a scale divided into 180, 100, or 80 divisions. (Fig. 6.) Each of these divisions is known as a degree and the scales used are known respectively as *Fahrenheit*, *Centigrade* or *Celsius*, and *Réaumur*. The former is used almost exclusively in engineering work in this country.

FIG. 4. STEM AND VERNIER. FIG. 5. CISTERN CONSTRUCTION. OBSERVATORY BAROMETER.

Due to variations, under service, in the glass of which mercurial thermometers are made, it is necessary to compare them from time to time with a standard or to check the melting and boiling-point readings for accuracy. This *calibration* of a thermometer, as the process is called, should always be made before taking any important temperature readings with the instruments. The corrections are either tabulated or plotted, and the sign (+) or (−) prefixed, the former indicating that the correction is to be added, and the latter that it is to be subtracted from the observed reading. For example, if the thermometer actually reads 200°, and the correction table shows + 2.3 at this observed temperature, the actual temperature is 202.3°.

A further correction for stem exposure must also be made in very exact work, due to the fact that thermometer scales are graduated to read correctly for total immersion, that is, with bulb and stem of the thermometer at the same temperature, and they should be used in this

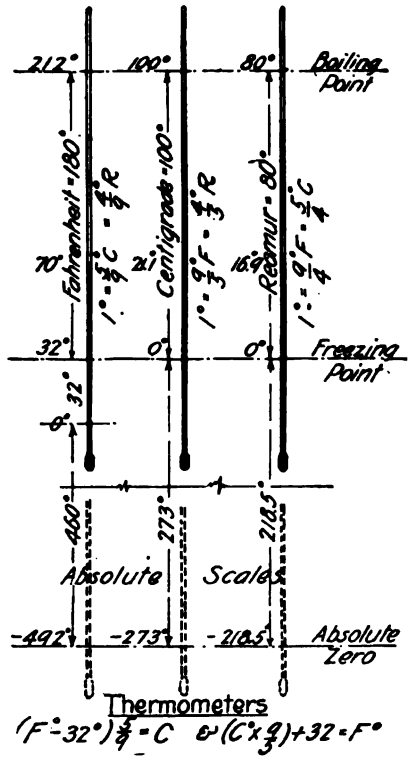

FIG. 6.

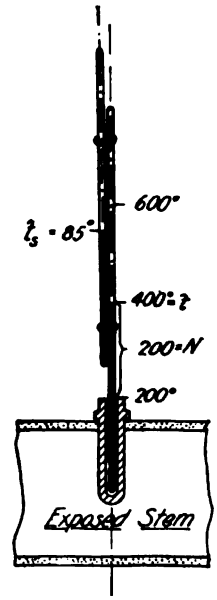

FIG. 7.

way when compared with a standard thermometer. If the stem emerges into space either hotter or colder than that in which the bulb is placed a "stem correction" must be applied to the observed temperature, and is made by use of the following formula:

$$\text{correction} = 0.000085\, N\, (t - t_s),$$

where the decimal is the difference between the coefficient of expansion of the mercury and the glass in the stem,

N = number of degrees of emergent mercury column,

t = observed temperature, and t_s = mean temperature of the emergent column. (Fig. 7.)

Absolute Temperature. In addition to the three temperature scales already described physicists employ what is known as the "absolute scale of temperatures," based on the so-called "absolute zero of temperature," at which point no molecular vibration exists. This zero is conceived as 491.6° F. below the melting-point of ice, or 32° F., it having been discovered that an ideal perfect gas would change in volume by $\frac{1}{491.6}$ of its volume at 32° for each 1° change in its

temperature at constant pressure. Thus, if 491.6 cu. ft. of gas measured at 32° F. is cooled 20° F. at constant pressure the new volume will be 471.6 cu. ft.

It is only necessary to add 491.6 − 32 or 459.6 to the actual thermometer reading to get the absolute temperature, that is, $T = t + 459.6$, where T = absolute temperature, and t = actual thermometer reading on the Fahrenheit scale. For engineering work 460° is used rather than 459.6°. For the Centigrade scale the relation is $T = t + 273.1$.

Pyrometers. For the measurement of high temperatures above 500° F. *pyrometers* of various kinds are employed. Mercurial pyrometers may be used for flue-gas temperatures up to 1000° F. These are simply thermometers with *an inert gas* such as nitrogen or carbon dioxide forced in above the mercury column to prevent the mercury from boiling, since at atmospheric pressure it will boil at 676° F. In fact, vaporization begins much below this temperature, so that ordinary thermometers should not be used much above 400° F.

Expansion pyrometers made up of two dissimilar metals, such as brass and iron, are used for temperatures up to 1500° F. They are liable to error unless both the brass and iron elements are uniformly heated throughout. In the common form a brass rod is enclosed in an iron pipe and one end of the rod attached to a cap at the end of the pipe, while the other end is connected by a multiplying gear to a pointer moving around a graduated dial. Lost motion in the gearing is often a source of error.

Thermo-electric pyrometers are used for temperatures up to 2900° F., and are described in "Steam," *Babcock & Wilcox Co.*, as follows:

"When wires of two different metals are joined at one end and heated, an electromotive force will be set up between the free ends of the wires. Its amount will depend upon the composition of the wires and the difference in temperature between the two. If a delicate galvanometer of high resistance be connected to the 'thermal couple,' as it is called, the deflection of the needle, after a careful calibration, will indicate the temperature very accurately.

"In the thermo-electric pyrometer of Le Chatelier, the wires used are platinum and a 10 per cent alloy of platinum and rhodium, enclosed in porcelain tubes to protect them from the oxidizing influence of the furnace gases. The couple with its protecting tubes is called an 'element.' The elements are made in different lengths to suit conditions.

"It is not necessary for accuracy to expose the whole length of the element to the temperature to be measured, as the electromotive force depends only upon the temperature of the juncture at the closed end of the protecting tube and that of the cold end of the element. The galvanometer can be located at any convenient point, since the length of the wires leading to it simply alter the resistance of the circuit, for which allowance may be made.

"The advantages of the thermo-electric pyrometer are accuracy over a wide range of temperatures, continuity of readings, and the ease with which observations can be taken. Its disadvantages are high first cost, and, in some cases, extreme delicacy."

For temperatures up to 3227° F., the fusing point of platinum, it is possible to make use of the melting points of various metals for approximate temperature indications.

Above these temperatures either *radiation* or *optical pyrometers* are employed, the former having a range as high as 3600° F., the limit in steam-boiler practice, and the latter being capable of recording temperatures as high as 12,000° F.

Measurement of Heat Quantity. (Calorimetry.) *Heat may be measured*, since it is a form of energy, in any of the usual energy units, as the joule, foot-pound, or horsepower hour. However, it is the custom to use for this purpose a special unit more readily applicable to heat changes. This unit in the English system is known as the **British thermal unit (B.t.u.)**, and is the amount of heat required to raise 1 pound of water from 63° to 64° F.; in the French system the unit is called the *Calorie*, and is the amount of heat required to raise 1 kilogram of water from 15° to 16° C. Since 1 kg. = 2.2046 lb. and 1° C. = $^9/_5$° F., then 1 Cal. = $2.2046 \times {}^9/_5 = 3.968$ B.t.u. or 1 B.t.u. = 0.252 Cal.

The tendency at the present time is to define a B.t.u. as the mean or average amount of

heat per degree to raise 1 lb. of water from 32° to 212° F., which is almost exactly the same as the heat required to raise 1 lb. of water 1° at 63.5° F.

The *calorimeter* is an apparatus into which a hot body of known temperature and weight can be introduced, and in cooling through a known difference in temperature is made to give up heat measured in B.t.u. to a liquid also of known temperature and weight, which undergoes a corresponding increase in temperature.

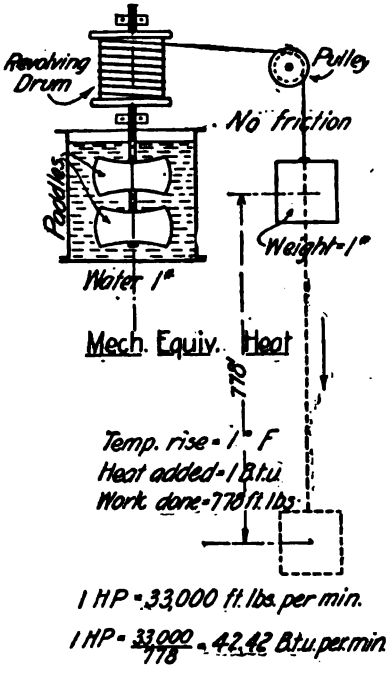

FIG. 8.

Example. If 1 lb. of iron is put into a calorimeter containing 10 lb. of water, and the water rises in temperature 5° F., the iron has given up 50 B.t.u., and at the same time its temperature has fallen about 420° F.

If 50 lb. of water are raised from 70° to 90° F. it is customary to say that $50 \times (90-70) = 1{,}000$ B.t.u. have been added.

It should be noted that while a B.t.u. is based on the temperature interval of 63° to 64° F. it will be sufficiently accurate for engineering work to use the actual temperature interval direct in any case without correction into terms of 63° to 64° F.

Specific Heat. It is a well-known fact that equal quantities of heat will raise equal weights of different substances a different number of degrees, depending on the nature of the substance. This property of matter is known as *specific heat*, and for any substance can be expressed as the number of B.t.u. required to raise or lower the temperature of 1 pound 1° F. at some given temperature. It is also customary to make use of the mean or average value for a certain temperature interval.

Two specific heats are recognized, one known as the "true" specific heat, measured at the temperature stated, and the other as the "mean" specific heat, which is the average value between the temperatures under consideration. In the case of gases a further distinction is made between specific heat at *constant pressure* and at *constant volume*. See "Specific Heat of Gases" in chapter on "Air."

The specific heat at constant pressure of a mixture of gases is obtained by multiplying the specific heat of each constituent gas by the percentage by weight of that gas in the mixture, and dividing the sum of the products by 100. The specific heat of a gas whose composition by weight is CO_2, 13 per cent; CO, 0.4 per cent; O, 8 per cent; N, 78.6 per cent, is found as follows:

CO_2	: 13.	$\times$ 0.217	=	2.821
CO	: 0.4	$\times$ 0.2479	=	0.09916
O	: 8.	$\times$ 0.2175	=	1.74000
N	: 78.6	$\times$ 0.2438	=	19.16268
	100.0			23.82284

and 23.8228/100 = 0.238 = specific heat of the gas, at constant pressure.

The specific heats of various solids, liquids, and gases are given in Table 1.

Relation between Units of Energy and Power. Since the various forms of energy, heat, mechanical energy, electrical energy, etc., are mutually convertible there must be definite numerical relations between the various units used to express energy. As determined by various physicists the relation between the B.t.u. and ft.-lb. is

1 B.t.u. = 777.64 ft.-lb.

The number 777.64 is called the *mechanical equivalent of heat* and is denoted by J. For ordinary use the value 778 may be taken. Another convenient relation is, 1 hp.-hr. = 2,546 B.t.u.

TABLE 1

SPECIFIC HEATS OF VARIOUS SUBSTANCES

SOLIDS

	Temperature,* Degrees Fahrenheit	Specific Heat		Temperature,* Degrees Fahrenheit	Specific Heat
Copper	59–460	0.0951	Glass (normal ther. 16 III)	66–212	0.1988
Gold	32–212	.0316	Lead	59	.0299
Wrought iron	59–212	.1152	Platinum	32–212	.0323
Cast iron	68–212	.1189	Silver	32–212	.0559
Steel (soft)	68–208	.1175	Tin	−105–64	.0518
Steel (hard)	68–208	.1165	Ice	.....	.5040
Zinc	32–212	.0935	Sulphur (newly fused)	.....	.2025
Brass (yellow)	32	.0883			

LIQUIDS

	Temperature,* Degrees Fahrenheit	Specific Heat		Temperature,* Degrees Fahrenheit	Specific Heat
Water	59	1.0000	Sulphur (melted)	246–297	0.2350
Alcohol	32 to 176	0.5475 to .7694	Tin (melted)	.....	.637
Mercury	32	.3346	Sea-water (sp.gr.1.0043)	64	.930
Benzol	50 to 122	.4066 to .4502	Sea-water (sp.gr.1.0463)	64	.903
Glycerine	59–102	.....	Oil of turpentine	32	.411
Lead (melted)	to 360	.0410	Petroleum	64–210	.498
			Sulphuric acid	68–133	.3363
			Olive oil	.....	.309

GASES

	Temperature,* Degrees Fahrenheit	Specific Heat at Constant Pressure	Specific Heat at Constant Volume		Temperature,* Degrees Fahrenheit	Specific Heat at Constant Pressure	Specific Heat at Constant Volume
Air	32–392	0.2375	0.1693	Carbon monoxide	41–208	0.2425	0.1728
Oxygen	55–405	.2175	.1553	Carbon dioxide	52–417	.2169	.1535
Nitrogen	32–392	.2438	.1729	Methane	64–406	.5929	.4505
Hydrogen	54–388	3.4090	2.4141	Blast-Fur. gas (approx.)	.....	.2277	.....
				Flue gas (approx.)	.....	.2400	.....

SPECIFIC HEAT OF BUILDING MATERIALS

Building Materials	Specific Heat	Building Materials	Specific Heat	Densities	Lb. per 1 Cu. Ft.
Brick work	0.1950	Oakwood	0.5700	Stone work	160
Masonry	.2159	Birch	.4800	Wood	40
Plaster	.2000	Glass	.1977	Slate	170
Pinewood	.4670			Plaster	90

* When one temperature alone is given the "true" specific heat is given; otherwise the value is the "mean" specific heat for the range of temperature given.

One method used for determining the value of J is shown diagramatically in Fig. 8. This apparatus consisted essentially of a paddle-wheel revolved by a cord wound around a drum and connected to a known weight which in falling through a known distance caused the wheel to stir up the water and thus transmit the energy of the falling weight to the paddle. The friction of the water against this wheel produces heat which raises the temperature of the water a known number of degrees.

The unit of electrical energy is the *joule*, and the corresponding unit of power is the *watt*,

or one watt is the same as one joule per second. The larger unit of power is the kilowatt (kw.) = 1,000 watts. The following are the relations between these units and other units, or the *electrical equivalents of heat.*

1 watt-hour = 3.415 B.t.u.
1 kw.-hour = 3,415 B.t.u.
1 hp.-hour = 746 watts = 0.746 kw.

The numerical relations between the various units of pressure, energy, and power is given in the following table.

TABLE 2

EQUIVALENT VALUES OF ELECTRICAL AND MECHANICAL UNITS
(*H. Ward Leonard* in "The Electrical Engineer," February 25, 1895, Revised.)

Unit	Equivalent Value in Other Units
1 Kilowatt hour	1,000 watt hours 1.34 h.p. hours 2,654,200 ft. lb. 3,600,000 joules 3,414.5 B.t.u. 367,100 kilogram meters 0.235 lb. carbon oxidised with perfect efficiency 3.53 lb. water evaporated from and at 212° F. 22.75 lb. of water raised from 62° to 212° F.
1 H.P. hour	0.746 kw. hours 1,980,000 ft. lb. 2,546 B.t.u. 273,750 kg. m. 0.175 lb. carbon oxidized with perfect efficiency 2.64 lb. water evaporated from and at 212° F. 17.0 lb. water raised from 62° F. to 212° F.
1 Kilowatt	1,000 watts 1.34 horse-power 2,654,200 ft. lb. per hour 44,240 ft. lb. per minute 737.6 ft. lb. per second 3,414.5 B.t.u. per hour 56.9 B.t.u. per minute 0.948 B.t.u. per second 0.2275 lb. carbon oxidized per hour 3.53 lb. water evaporated per hour from and at 212° F.
1 Horsepower	746 watts 0.746 kw. 33,000 ft. lb. per minute 550 ft. lb. per second 2,546 B.t.u. per hour 42.4 B.t.u. per minute 0.707 B.t.u. per second 0.175 lb. carbon oxidized per hour 2.64 lb. of water evaporated per hour from and at 212° F.

Sensible and Latent Heat. Whenever we add heat to a substance without change of state we increase its temperature, and the heat thus added is known as *sensible heat*, as, for example, the heat added to water between 50° and 140° F. Sensible heat changes, as already stated, are measured by the thermometer.

Heat may be added to a body without any change of temperature provided a change of state from solid to liquid or from liquid to vapor takes place, and the heat thus added is known as *latent heat.* When the change is from solid to liquid, as ice to water, this heat is known as the *latent heat of fusion.* At atmospheric pressure ice melts at 32° F. and the latent heat is 144 B.t.u. per pound.

When the change is from liquid to vapor, as water to steam, the heat required to effect the change is known as the *latent heat of evaporation.* At atmospheric pressure water evaporates at 212° F. and the latent heat is 971.7 B.t.u. per pound.

TABLE 3

APPROXIMATE MELTING POINTS OF METALS AND OTHER SUBSTANCES

Metal or Other Substance	Temperature, Deg. Fahrenheit	Metal or Other Substance	Temperature, Deg. Fahrenheit
Wrought iron	2787	Lead	621
Pig iron (gray)	2190–2327	Bismuth	498
Cast iron (white)	2075	Tin	449
Steel	2460–2550	Platinum	3191
Steel (cast)	2500	Gold	1946
Copper	1981	Silver	1762
Zinc	786	Aluminum	1216
Antimony	1166	Mercury	−39
Ice	32	Carbon dioxide	−108
Tallow	92	Sulphur dioxide	−148
Stearic acid	158		
Sulphur	239		

In no case is this latent heat lost, as it always reappears whenever the substance passes through the reverse process from gas or vapor to liquid or from liquid to solid.

The temperature of ebullition of any liquid, or the *boiling-point*, may be defined as the temperature which exists when the addition of heat to the liquid no longer causes rise of temperature, the heat added being absorbed or utilized in converting the liquid into vapor. This temperature is dependent upon the pressure under which the liquid is evaporated, being higher as the pressure is greater. See Table 5 in the Chapter on " Water, Steam, and Air."

Expansion of Solids. The addition of heat, to practically all substances, causes them to expand or increase in length, area, and volume, providing no change of state takes place during heating. The amount by which one unit of length, area, or volume of the substance changes in length, area, or volume per 1° rise in temperature is known as the *coefficient of linear, superficial, or cubical expansion*, respectively. The coefficient of expansion is not a constant quantity and hence the temperature range to which the coefficient applies should always be stated. The variation is slight for the same material and the coefficient is usually assumed constant for any given substance.

TABLE 4

LINEAL EXPANSION OF SOLIDS AT ORDINARY TEMPERATURES

(Tabular values represent increase per foot per 100 degrees increase in temperature, Fahrenheit)

Substance	Temperature Conditions,* Degrees Fahrenheit	Coefficient per 100 Degrees Fahrenheit
Brass (cast)	32 to 212	0.001042
Brass (wire)	32 to 212	.001072
Copper	32 to 212	.000926
Glass (English flint)	32 to 212	.000451
Granite (average)	32 to 212	.000482
Iron (cast)	104	.000589
Iron (soft forged)	0 to 212	.000634
Iron (wire)	32 to 212	.000800
Lead	32 to 212	.001505
Mercury†	32 to 212	.009984
Limestone	32 to 212	.000139
Steel (Bessemer rolled, hard)	0 to 212	.00056
Steel (Bessemer rolled, soft)	0 to 212	.00063
Steel (cast, French)	104	.000734
Steel (cast annealed, English)	104	.000608

* Where range of temperature is given, coefficient is mean over range.
† Coefficient of cubical expansion.

Propagation of Heat. Heat may be propagated by conduction, convection, and radiation.

Conduction is a molecular transmission of heat, the material in question transmitting the heat from particle to particle of its own substance. This transmission will only occur between

any two sections of the material which are at different temperatures, the heat always flowing from the higher to the lower temperature.

Time is required for conduction to take place, and varies with the distance between the sections, with the temperature difference, and with the character of the material. Good conductors permit a very rapid flow, while poor conductors transmit heat very slowly. In these latter substances great differences of temperature may exist, while in the former the substance arrives at very nearly the same temperature throughout in a very short time.

Since conduction takes place between molecules by contact it may go on *in any direction* from the source of heat, and hence does not always travel in straight-lines like radiation. The amount of heat which is transmitted per unit of time by conduction is directly proportional to the area of the cross-section, to the difference of the temperatures divided by the thickness, and to a coefficient which depends on the character of the material.

The *coefficient of conduction* is the quantity of heat which flows in unit time, through a cross-section of unit area, when the thickness of the plate is unity and the difference of temperature is one degree. In the English system the relation that determines this coefficient is

$$Q = C\,S\,\frac{(t_2 - t_1)}{X}\,T$$

Q = quantity of heat in B.t.u. C = coefficient of conduction per 1 in. thickness, S = area in sq. ft. X = thickness in inches, $t_2 - t_1$ = the temperature difference between the two sections or surfaces, and T = time in hours.

The conducting power of substances varies greatly, as shown by the table of absolute conductivities of various materials in the Chapter on " Heat Transmission of Cold Storage Walls."

Convection is the transmission of heat by the circulation of one substance, a fluid or gas, over the surface of a hotter or colder body. The particles or molecules of the moving substance come into close contact with the hotter body, and are actually heated by conduction during the period of this contact, but immediately pass on, carrying what heat they have acquired along with them, and fresh, cooler molecules succeed them. This circulation may be caused by purely natural forces, or may be produced by mechanical means. The circulation of the water in a boiler is an example of the former, while the circulation of air over the heater coils in a fan blast heating system is an example of the latter condition. In case the circulating substance is hotter than the other body the process will be reversed and heat will be given up by the moving molecules.

In general, it may be said that the heat transferred by convection is independent of the nature of the surface of the body and of the surrounding absolute temperature. It depends on the velocity of the moving substance, varying as some function of the velocity, on the form and dimensions of the body; and on the temperature difference between the moving substance and the body.

The general expression for the *heat given off by convection* is:

$$H = f\,(V)^{\frac{1}{n}}\,(t_s - t_a)\,A,$$

where V is the velocity in feet per second, t_s and t_a are the temperatures of the heating media and outside air respectively in degrees F., A is the area in sq. ft., and f and n are constants to be determined for the radiator in question.

Radiation is the transmission of heat through a medium commonly known as the ether, which is assumed to occupy all intermolecular spaces. Radiation always takes place *in straight lines*, obeying the same laws as light, so that its intensity or amount per unit of surface varies inversely as the square of the distance from the source of radiation to the surface, and directly with the sine of the angle of inclination. Moreover, radiant heat continues to travel in the same straight line until intercepted or absorbed by some other body.

TABLE 5

RELATIVE RADIATING OR ABSORBING POWER AT 212° F.

Lampblack	100	Steel	17
White lead	100	Platinum	17
Paper	98	Polished brass	7
Glass	90	Copper	7
India ink	85	Polished gold	3
Shellac	72	" silver	3

The amount of radiant heat emitted or absorbed depends largely upon the character of the surface of the hot or cold body, and it has been found that the power of a given substance for absorbing radiant heat is exactly the same as for emitting radiant heat. Table 5 gives the relative radiating powers of various substances at 212° F.

Radiant heat has the property of *passing through dry gases without heating them* to any appreciable extent, but air containing water vapor or dust will intercept and absorb radiant heat, hence the earth's atmosphere is warmed by the radiant heat from the sun.

Radiant heat like light is reflected from various materials, and it will be found that in general substances possessing a high power of radiation have a low reflecting power. Silver has a relative radiating power of 3 but its reflecting power is given as 97.

Radiant heat will also pass through certain solid substances without heating them, in the same way as light passes through glass. This property of substances is known as *diathermacy*, and crystals of rock salt have this property to a very high degree.

Radiant heat is diffused in all directions by certain materials such as white lead, powdered silver, and chromate of lead. Radiation in this case takes place in all directions, with little or no regularity or uniformity of direction.

In general it may be said that the heat emitted by radiation per unit of surface and per unit of time is independent of the form and extent of the heated body provided there are no re-entrant surfaces to intercept the heat rays. Also, the amount of heat emitted by a surface radiating equally in all directions depends only on the nature of the surface, the difference in temperature between the surface and surroundings, and the absolute value of the temperature.

The general expression for *heat given off by radiation*, as stated by *Newton*, and later by *Dulong* and *Petit*, as well as *Stefan* and *Boltzman*, is:

$$H = K\left(T_1^x - T_2^x\right),$$

where K is the radiation constant or coefficient, and T_1 and T_2 are the absolute temperatures of the hot body and the surrounding colder bodies respectively. *Newton* gave the exponent x the value 1, but this has since been proved too small, and *Stefan* and *Boltzman* give the value $x = 4$, while for a black body they give $K = (16 \times 10^{-10})$.

CHAPTER II

WATER, STEAM, AND AIR

WATER

Properties of Water. Pure water is a chemical compound (H_2O) formed by the union of two volumes of hydrogen gas with one volume of oxygen gas, or 2 parts by weight of hydrogen and 16 parts by weight of oxygen. Water expands when heated from 39.2° F., the temperature of maximum density, to any higher temperature, but contracts when heated from 32° to 39.2° F. At the atmospheric pressure of 29.92″ mercury its freezing point is 32° F. and its boiling point is 212° F.

The change in density is shown by the following comparison of weights per cu. ft. at various temperatures.

At 32° F., or freezing point = 62.418 lb. per cu. ft.
" 39.2° F., max. density = 62.427 " " " "
" 62° F., standard = 62.355 " " " "
" 212° F., or boiling point = 59.760 " " " "

TABLE 1

HEAT CONTENT AND SPECIFIC WEIGHT OF WATER

Temp., Deg. Fahr.	Heat Content Above 32° per 1 Lb.	Weight, Lb. per Cu. Ft.	Temp., Deg. Fahr.	Heat Content Above 32° per 1 Lb.	Weight, Lb. per Cu. Ft.	Temp., Deg. Fahr.	Heat Content Above 32° per 1 Lb.	Weight, Lb. per Cu. Ft.
32	0.00	62.42	100	68.00	62.02	158	125.88	61.02
35	3.02	62.42	102	69.99	62.00	160	127.88	60.98
40	8.05	62.42	104	71.99	61.97	162	129.87	60.94
45	13.07	62.42	106	73.98	61.95	164	131.87	60.90
50	18.08	62.41	108	75.97	61.92	166	133.86	60.85
52	20.08	62.40	110	77.97	61.89	168	135.88	60.81
54	22.08	62.40	112	79.96	61.86	170	137.88	60.77
56	24.08	62.39	114	81.96	61.83	172	139.88	60.73
58	26.08	62.38	116	83.95	61.80	174	141.88	60.68
60	28.08	62.37	118	85.94	61.77	176	143.89	60.64
62	30.08	62.36	120	87.94	61.74	178	145.89	60.59
64	32.08	62.35	122	89.93	61.70	180	147.89	60.55
66	34.08	62.34	124	91.93	61.67	182	149.89	60.50
68	36.08	62.33	126	93.92	61.63	184	151.90	60.46
70	38.07	62.31	128	95.92	61.60	186	153.90	60.41
72	40.07	62.30	130	97.91	61.56	188	155.91	60.37
74	42.07	62.28	132	99.91	61.52	190	157.91	60.32
76	44.06	62.27	134	101.90	61.49	192	159.92	60.27
78	46.06	62.25	136	103.90	61.45	194	161.92	60.22
80	48.05	62.23	138	105.90	61.41	196	163.93	60.17
82	50.05	62.21	140	107.89	61.37	198	165.94	60.12
84	52.04	62.19	142	109.89	61.34	200	167.95	60.07
86	54.04	62.17	144	111.89	61.30	202	169.95	60.02
88	56.03	62.15	146	113.89	61.26	204	171.96	59.97
90	58.03	62.13	148	115.88	61.22	206	173.97	59.92
92	60.02	62.11	150	117.88	61.18	208	175.98	59.87
94	62.02	62.09	152	119.88	61.14	210	177.99	59.82
96	64.01	62.07	154	121.88	61.10	212	180.00	59.76
98	66.01	62.05	156	123.88	61.06			

At 62° a U. S. gallon of 231 cu. in. weighs approximately 8⅓ lb., and a cu. ft. is equal to 7.48 gals. Pressures are often stated in feet or inches of water column, and at 62° F. the equiva-

lent in pounds per sq. ft. is (let h = head in feet), = 62.355 h, or in pounds per sq. in. = $\frac{62.355}{144} h = 0.433\ h$. Also, if h_1 = head in inches of water at 62° F., then the pressure in ounces per sq. in. = $\frac{h_1}{12} \frac{62.355}{144} \times 16 = 0.578\ h_1$, or $h_1 = 1.73 \times$ pressure in ounces per sq. in. A column of water 2.309 ft. or 27.71 in. high exerts a pressure of 1 lb. per sq. in. at 62° F.

For density of water at other temperatures than those already stated see Table 1.

The *specific volume* of water, or the volume of one pound, depends on the temperature at which the volume is measured, and is practically independent of the pressure, since water is but very slightly compressible. The specific volume is the reciprocal of the specific density, values for the latter being given in Table 1, hence it is only necessary to find the value of $\frac{1}{\text{wt. per cu. ft.}}$ to get the volume of 1 pound, as $\frac{1}{62.42} = 0.016$ cu. ft. at 32° F.

The *boiling point* of pure water varies with the pressure or altitude above sea level, the temperature at which ebullition will occur decreasing with the altitude or lower pressure. This relation is shown by reference to the steam tables, which also indicate that the boiling point increases for pressures higher than that of the atmosphere at sea level. Table 2 gives the boiling points at various altitudes.

TABLE 2

BOILING POINT OF WATER AT VARIOUS ALTITUDES

Boiling Point, Degrees Fahr.	Altitude Above Sea Level, Feet	Atmospheric Pressure, Pounds per Sq. In.	Barometer Reduced to 32 Degrees, Inches	Boiling Point, Degree Fahr.	Altitude Above Sea Level, Feet	Atmospheric Pressure, Pounds per Sq. In.	Barometer Reduced, to 32 Degrees, Inches
184	15,221	8.20	16.70	199	6,843	11.29	22.99
185	14,649	8.38	17.06	200	6,304	11.52	23.47
186	14,075	8.57	17.45	201	5,764	11.76	23.95
187	13,498	8.76	17.83	202	5,225	12.01	24.45
188	12,984	8.95	18.22	203	4,697	12.26	24.96
189	12,367	9.14	18.61	204	4,169	12.51	25.48
190	11,799	9.34	19.02	205	3,642	12.77	26.00
191	11,243	9.54	19.43	206	3,115	13.03	26.53
192	10,685	9.74	19.85	207	2,589	13.30	27.08
193	10,127	9.95	20.27	208	2,063	13.57	27.63
194	9,579	10.17	20.71	209	1,539	13.85	28.19
195	9,031	10.39	21.15	210	1,025	14.13	28.76
196	8,481	10.61	21.60	211	512	14.41	29.33
197	7,932	10.83	22.05	212	Sea Level	14.70	29.92
198	7,381	11.06	22.52				

The *specific heat of water*, or the number of B.t.u. required to raise the temperature of 1 pound of water 1° F. varies with the temperature as shown in the following table.

TABLE 3

Temperature, F.°	Specific Heat
30° F.	1.0098
55	1.0000
100	0.9967
160	1.0002
210	1.0050

In consequence of this variation, the amount of heat required to raise 1 lb. of water at 32° F. through a known temperature interval, known as the *heat of the liquid*, will depend on the average value of the specific heat for that range, and this variation is shown in Table 1—where the "heat units" required to raise 1 lb. of water from 32° F. to the temperature in the table is given as the heat content.

The specific heat of water is very commonly assumed to be unity, and is so used in many engineering calculations. The steam tables, however, are based on the exact value for the temperature range in question.

The specific heat of ice at 32° F. is 0.463 B.t.u. per 1 pound.

Flow of Water in Pipes. The flow of water in pipes depends on a difference in head or pressure between the two points between which flow takes place. This difference in head is used up in overcoming the resistance (friction of the pipe) offered to the flow, and in creating the velocity of discharge at the second point.

The flow of a liquid in a pipe is under the influence of three heads or equivalent pressures.

The *velocity head or pressure* is defined as that head or pressure of the liquid which is required to create the velocity of flow, that is, the head or pressure necessary to accelerate the mass from a state of rest to the velocity attained at the point in the line under consideration.

The *resistance head or pressure*, also termed the *friction head*, is that head or pressure required to overcome the frictional resistance offered to the flow.

The *total head or pressure*, also termed the *dynamic head or pressure*, is the sum of the velocity head plus the friction head..

The *potential or measured head* is the vertical distance, measured in feet, from some datum line to the center of the pipe at the point in the line under consideration.

The Piezometer in its simplest form consists of a tube inserted in a pipe at right angles to the flow (Fig. 1). The radial pressure within the pipe is measured by the height of the column of the liquid within the tube. For high pressures an ordinary gage of the Bourdon type is substituted for the tube.

The reading obtained by the use of a piezometer placed in a pipe of uniform cross section throughout its entire length with free discharge to the atmosphere is the head lost by friction beyond the point of attachment of the piezometer.

The Pitot Tube in its simplest form is a bent tube placed in the pipe so that the immersed end of the tube faces the stream (Fig. 2). The height of the column of liquid in the tube is greater

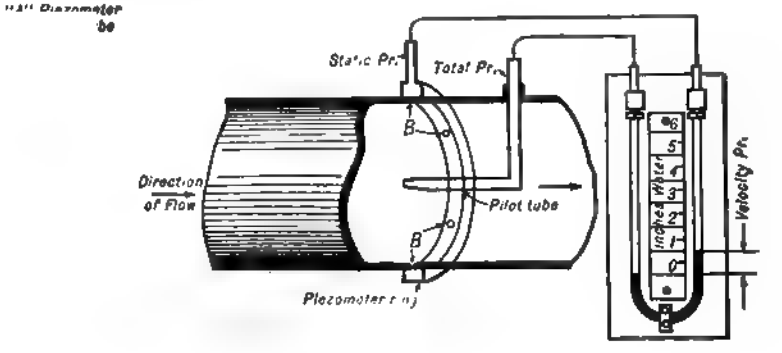

FIG. 1. FIG. 2.

than the reading obtained by the piezometer by an amount equal to the head required to produce the velocity of flow. The height of the column is the *total head* at the point of measurement.

The *difference* between the readings obtained by the Pitot tube and the piezometer is the velocity head at the point considered. If the pipe is of uniform diameter this difference is of course a constant throughout the length of the pipe as the velocity is constant.

The difference between the total and resistance heads is read direct on the manometer by connecting the opposite ends of the U tube to the piezometer and Pitot tube as shown by Fig. 2.

If it were not for friction "the total head at any point or section would be equal to the total

head at any subsequent point or section," total head being the sum of the static or friction head plus the velocity head. See Fig. 4. $H = h_s + h_v$, where

H = total head measured in feet of fluid flowing.

h_s = static or friction head measured in feet of fluid flowing.

h_v = velocity head measured in feet of fluid flowing.

This relation between the total head at any two sections of a pipe line, assuming frictionless flow, is known as *Bernoulli's theorem* and is demonstrated as follows. See Fig. 3.

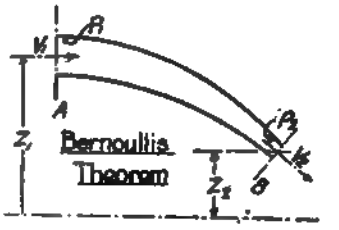

FIG. 3.

Assume (1) a perfect fluid, (2) steady flow, (3) no friction. Assume a weight W passes section A in unit time. Because of (2) a weight W also passes B in the same time.

$$\text{Kinetic energy of } W \text{ at } A = \tfrac{1}{2} M V^{2*} \left(\text{where } M = \frac{W}{g}\right)$$

Let P_1 = the radial or static pressure at section A measured in pounds per sq. ft. and P_2 the static pressure at B measured in pounds per sq. ft.

Potential energy of W at $A = WZ_1 + \frac{P_1}{D} W$ in which D is the density of the fluid flowing hence $\frac{P_1}{D}$ is the potential head equivalent to the static pressure P_1, and Z_1 = potential, head or measured

FIG. 4.

head at the section. The total energy of W at $A = W\left(\frac{V_1^2}{2g} + Z_1 + \frac{P_1}{D}\right)$. Likewise, the total energy of W at $B = W\left(\frac{V_2^2}{2g} + Z_2 + \frac{P_2}{D}\right)$. Since there is no external frictional resistance the total energy at A equals that at B or

$$\frac{V_1^2}{2g} + Z_1 + \frac{P_1}{D} = \frac{V_2^2}{2g} + Z_2 + \frac{P_2}{D}$$

This is Bernoulli's theorem, and each member of the equation is the "total head" at the corresponding section. It may be stated thus: In a steady flow *without friction* the total head

* M has a velocity V_1 and a constant force F would bring it to rest in a time t, and a distance S with a negative acceleration a, $S = \frac{1}{2} at^2$ and $F = Ma$. The work obtained (i.e. the kinetic energy of M) equals $F \times S = \frac{1}{2} M \times at^2$. But $v = at$. ∴ Kinetic energy of $M = \frac{1}{2} M V_1^2 = \frac{W}{2g} V_1^2$.

at any section equals the total head at any subsequent section. Note that the "total head" is the sum of the "velocity" head, the "potential" head, and the "pressure" head.

Case I. (*Flow without friction*): Apply Bernoulli's theorem to the case of water issuing from the base of a stand pipe. See Fig. 1.

The pressure at A is atmospheric (P_a) and within the jet at B it is also atmospheric. The velocity at A is zero

$$0 + H + \frac{P_a}{D} = \frac{V^2}{2g} + 0 + \frac{P_a}{D}$$

$$\therefore H = \frac{V^2}{2g} \text{ or } V = \sqrt{2gH}$$

Case II. (*Flow with friction*): Since friction tends to oppose motion the total head at any section is greater than the total head at any subsequent section. The "lost" or "friction" head

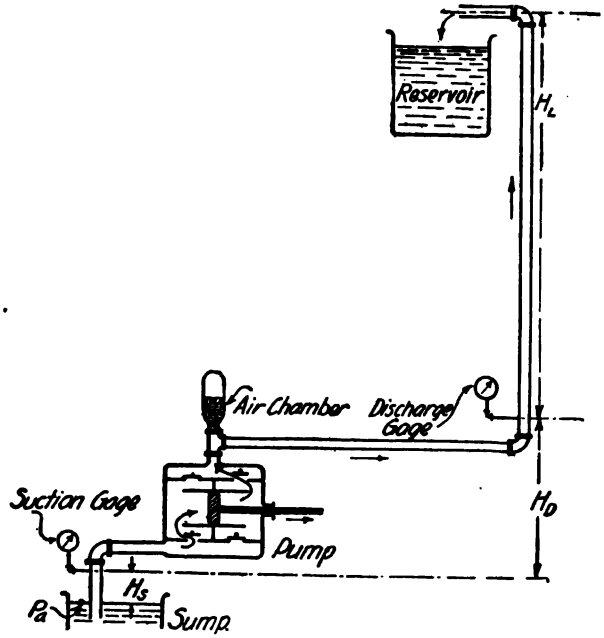

FIG. 5.

between any two sections is therefore the difference between the total heads at these sections. (Fig. 4.)

The total head at $A = 0 + H + \frac{P_a}{D}$

The total head at $C = \frac{V^2}{2g} + 0 + \frac{P_a}{D}$

The friction or lost head $= \left(0 + H + \frac{P_a}{D}\right) - \left(\frac{V^2}{2g} + 0 + \frac{P_a}{D}\right) = H - \frac{V^2}{2g}$

By applying the equation between A and B, or B and C it can readily be seen that the "pressure" or "static" head at B equals the friction or lost head caused by the pipe line.

Application of Bernoulli's theorem to the case of a pump to show what the suction and discharge gages on the pump register, and to show how the "total" head on a pump may be found. (Fig. 5.) Call H_T the "total" head on pump, h_1 the friction head lost in the suction pipe, h_2 the friction head lost in the discharge pipe, V_s the suction velocity, and V_d the discharge velocity.

Applying the equation between the surface of the sump and the suction gage:

$$\left(0 + 0 + \frac{P_a}{D}\right) - h_1 = \left(\frac{V_s^2}{2g} + H_s + \frac{P_s}{D}\right) \quad \ldots\ldots\ldots \quad (1)$$

The pressure registered on the suction gage is $(P_a - P_s)$ where P_s is the absolute pressure at this section. From equation (1) $\frac{1}{D}(P_a - P_s) = \left(H_s + \frac{V_s^2}{2g} + h_1\right)$.

The head registered on the suction gage equals the suction lift, plus the suction velocity head, plus the suction friction head.

Applying the equation between the discharge gage and the end of the line:

$$\left(\frac{V_d^2}{2g} + 0 + \frac{P_d}{D}\right) - h_2 = \left(\frac{V_d^2}{2g} + H_L + \frac{P_a}{D}\right)$$

$$\therefore \frac{1}{D}(P_D - P_a) = h_2 + H_L$$

The discharge gage registers the friction head in the discharge line, plus the measured lift of the discharge line.

Apply the theorem between the surface of the sump and the discharge pressure gage. (Note that the head H_T is added to the water during its passage through the pump.)

$$\left(0 + 0 + \frac{P_a}{D}\right) - h_1 + H_T = \frac{V_d^2}{2g} + H_D + H_s + \frac{P_d}{D}$$

$$\therefore \left(\frac{P_d}{D} - \frac{P_a}{D}\right) = H_T - h_1 - H_D - H_s - \frac{V_d^2}{2g}$$

or
$$H_T = \left(\frac{P_d}{D} - \frac{P_a}{D}\right) + H_s + h_1 + \frac{V_d^2}{2g} + H_D \quad \ldots\ldots\ldots \quad (2)$$

but
$$\left(\frac{P_d}{D} - \frac{P_a}{D}\right) = h_2 + H_L$$

$$\therefore H_T = h_2 + h_1 + H_s + H_D + H_L + \frac{V_d^2}{2g}$$

The *total head on the pump is equal to the entire friction head plus the measured head plus the final discharge velocity head.*

When the head is produced on the pump by closing the discharge valve, the measured head does not exist in reality but only virtually. The total head must be found from the two gage readings, the velocities in the suction and discharge lines, and the distance between gages.

From equation (2)

$$H_T = \left(\frac{P_d}{D} - \frac{P_a}{D}\right) + \left(H_s + h_1 + \frac{V_s^2}{2g}\right) + \frac{V_d^2}{2g} - \frac{V_s^2}{2g} + H_D$$

$$= \left(\frac{P_d}{D} - \frac{P_a}{D}\right) + \left(\frac{P_a}{D} - \frac{P_s}{D}\right) + \frac{V_d^2}{2g} - \frac{V_s^2}{2g} + H_D$$

The total head equals the discharge pressure head plus the suction pressure head plus the final velocity head minus the suction velocity head plus the distance between gages.

If the size of the discharge pipe equals that of the suction pipe the total head is found more easily.

V_d will equal V_s

Substituting $\frac{V_s^2}{2g}$ for $\frac{V_d^2}{2g}$ in (2)

$$H_T = \left(\frac{P_d}{D} - \frac{P_s}{D}\right) + \left(H_s + h_1 + \frac{V_s^2}{2g}\right) + H_D$$

$$H_T = \left(\frac{P_d}{D} - \frac{P_s}{D}\right) + \left(\frac{P_s}{D} - \frac{P_s}{D}\right) + H_D$$

The *total head on the pump equals the discharge pressure head plus the suction pressure head plus the distance between gages.*

Friction Head due to Flow of Water in Pipes. The *flow of water* in a pipe of uniform diameter will take place with a constant velocity if the total head producing flow is maintained constant. This total head can be determined for any given velocity of flow if the friction head is known.

The loss of head due to friction when a fluid such as water, steam, air, or gas flows through a straight tube or pipe is generally represented by the formula,

$$h = f\frac{L}{A}\frac{R}{}\frac{v^2}{2g}$$

where f = the coefficient of friction, L = length of tube in feet; R = perimeter of tube in feet, A = area in sq. ft., v = velocity of flow in feet per sec., and h = friction head in feet of the fluid flowing.

If the tube is round and D = diameter in feet, then $h = f\frac{\pi D L}{\frac{\pi D^2}{4}}\frac{v^2}{2g} = f\frac{4}{D}\frac{L}{2g}\frac{v^2}{}$ in which

$f = .00644$ according to *Weisbach*, for clean iron pipe.

This formula may be reduced to $h = f\frac{2}{D}\frac{L}{g}\frac{v^2}{}$ or $h = f_1\frac{L}{D}\frac{v^2}{2g}$ in which $f_1 = 0.02$, an average for water.

It is understood that the pipe is smooth, clean and free from the burrs as ordinarily left by a wheel pipe cutter.

For very low velocities, as found in gravity hot water heating systems, the above formula does not hold good.

William Cox in the "American Machinist," Dec. 28, 1913, gives the following modification of the above formula, which is simpler and gives almost identical results.

$$h = \frac{L}{d}\frac{(4v^2 + 5v - 2)}{1200}.$$

Values of the expression $\frac{(4v^2 + 5v - 2)}{1200}$ can be tabulated for varying velocities so that h may be readily solved for when v, L, and d are known. See Table 4, for these tabulated values. In Cox's formula d = diameter in inches.

TABLE 4

VALUES OF $\frac{4v^2+5v-2}{1200}$

v	0.0	0.2	0.4	0.6	0.8
1	0.00583	0.00813	0.01070	0.01353	0.01663
2	.02000	.02363	.02753	.03170	.03613
3	.04083	.04580	.05103	.05653	.06230
4	.06833	.07463	.08120	.08803	.09513
5	0.10250	0.11013	0.11803	0.12620	0.13463
6	.14333	.15230	.16153	.17103	.18080
7	.19083	.20113	.21170	.22253	.23363
8	.24500	.25663	.26853	.28070	.29313
9	0.30583	0.31880	0.33203	0.34553	0.35930
10	.37333	.38763	.40220	.41703	.43213
11	.44750	.46313	.47903	.49520	.51163
12	.52833	.54530	.56253	.58003	.59780
13	0.61583	0.63413	0.65270	0.67153	0.69063
14	.71000	.72963	.74953	.76970	.79013
15	.81083	.83180	.85303	.87453	.89630
16	.91833	.94063	.96320	.98603	1.00913
17	1.03250	1.05613	1.08003	1.10420	1.12863
18	1.15333	1.17830	1.20353	1.22903	1.25480
19	1.28083	1.30713	1.33370	1.36053	1.38763
20	1.41500	1.44263	1.47053	1.49870	1.52713
21	1.55583	1.58480	1.61403	1.64353	1.67330

The use of the formula and table may be illustrated as follows:

Example. Given a pipe 5″ in diameter and 1,000 ft. long, with 49 ft. head, what will be the discharge?

If the velocity v is known in feet per second, the discharge will be $\pi \frac{d^2}{4} \times \frac{60}{144} \times v = 0.32725\ d^2v$ cu. ft. per min. $= Q$. Now $\frac{hd}{L} = \frac{49 \times 5}{1000} = \frac{4v^2+5v-2}{1200} = 0.245$ and by reference to the table it will be seen that the actual velocity $v = 8$ ft. per sec.

The discharge in cu. ft. per min., if v is velocity in feet per second and d the diameter in inches is $0.32725\ d^2v$, hence $Q = 0.32725 \times 25 \times 8 = 65.45$ cu. ft. per min.

The velocity due to the head, if there were no friction, is $8.025 \sqrt{h} = 56.175$ ft. per sec. and the discharge at that velocity would be $0.32725 \times 25 \times 56.175 = 460$ cu. ft. per min.

Example. Suppose it is required to deliver this amount, 460 cu. ft., at a velocity of 2 ft. per sec.; what diameter of pipe of the same length and under the same head will be required and what will be the loss of head by friction?

$$d = \text{diameter} = \sqrt{\frac{Q}{v \times 0.32725}} = \sqrt{\frac{460}{2 \times 0.32725}} = \sqrt{703} = 26.5 \text{ inches diameter.}$$

Since the diameter, velocity and discharge are now known the friction head is found from

$h = \frac{L}{d} \times \frac{(4v^2+5v-2)}{1200}$ using the table; thus,

$$h = \frac{1000}{26.5} \times 0.02 = \frac{20}{26.5} = 0.75 \text{ ft.}$$

Friction Pressure Loss Chart for Flow of Water.* The *chart* (Fig. 6) from the "American Machinist," is based on the preceding formula. It gives the *velocity of flow* in pipes of various nominal diameters, and also the *friction or pressure loss* in pounds per sq. in. per 100 ft. of pipe, at varying rates of flow, stated both in gallons per min., and in cu. ft. per min.

The corresponding velocity of flow in lineal feet per sec. is read from the same chart by referring to the velocity lines, which in the example given on the sheet would be 5.9 ft. per sec.

* For additional data in this connection, see the Chapter on "Pumps."

FIG. 6. FLOW OF WATER IN PIPES.

Example. 60 gals. per min. to be transmitted 300 ft. through a 2″ standard steel pipe. Required the friction loss. From 60 gals. on the left trace horisontally to the intersection with the diagonal 2″ pipe, and read 3.25 lb. per sq. in. at the bottom of the chart. The loss is then $3 \times 3.25 = 9.75$ lb. per sq. in.

Approximate Allowance for Ells and Globe Valves.

Add to the measured length of line 40 diams. for each 90° ell, and 60 diams. for each globe valve.

Loss of Head by Entrance, Elbows and Valves. The loss of head occasioned by entrance to a pipe and various obstructions may be stated as a function of the velocity head as $h = \phi \frac{V^2}{2g}$ in which ϕ is a coefficient experimentally determined.

Values of ϕ. This may be taken to equal 0.50 for a pipe at right angles to the reservoir where the pipe is flush with the inside surface with the burr removed so that the edge is sharp. Approximately the same condition exists when a smaller branch pipe is taken off a main.

When the pipe projects inside the reservoir for a length equal to several diameters the value of ϕ may be taken as 0.93. If the entrance is bell-mouthed and smooth the value of ϕ may be practically equal to 0.

The value of ϕ for elbows as stated by *Weisbach* based on experiments conducted with 1¼-inch pipe are as follows:

Angle of elbow	= 22½°	45°	90°
Value of ϕ	= 0.038	0.181	0.984

For smaller pipe the value of ϕ increases. For example, *Weisbach* gives $\phi = 1.53$ for a 90 degree ⅜-inch elbow. For larger pipe the value of ϕ becomes less.

The value of ϕ for a globe valve, wide open, is ordinarily assumed as 1.5 times the value for a 90 degree elbow. The loss through a gate valve, wide open, is ordinarily neglected.

Engineers, in practice, frequently assume an equivalent length of straight pipe to allow for the loss occasioned by elbows and globe valves. The assumption that is frequently made is to add to the measured length of line a length equal to 40 diameters of the pipe for each 90 degree elbow and 60 diameters for each globe valve.

For further data on the loss through fittings, etc., and the allowable velocity of water through pipes see the Chapter on " Pumps."

Example. A 2-inch pipe 300 ft. long with five–90° elbows and two globe valves is to carry 60 gallons per min. Required the pressure loss in the line.

From the chart Fig. 6 we find that the velocity will be approximately 6 ft. per sec. and that the friction loss in the straight run of pipe will be $3 \times 3.25 = 9.75$ lb. per sq. in. This is equivalent to a head of 9.75×2.3 or 22.4 feet.

The loss through 5 elbows is $5 \times 0.984 \times \frac{6^2}{2g} = 2.75$ ft.

The loss through 2 globe valves is $2 \times 1\frac{1}{2} \times 0.984 \times \frac{6^2}{2g} = 1.65$ ft.

The loss of head at entrance is $0.50 \times \frac{6^2}{2g} = 0.28$ ft.

The total estimated loss of head is therefore $22.4 + 2.75 + 1.65 + 0.28 = 27.08$ ft.

Measurement of the Flow of Water. The weight of the liquid delivered in a unit of time may be determined either directly or indirectly. To determine the weight delivered directly, it is necessary to use weighing tanks and scales or to measure the volume delivered in a tank of known dimensions. In the latter case the density of the liquid, by which the volume is multiplied to obtain the weight, must be known. Owing to the large size of tanks necessary when the quantity discharged is considerable direct measurement is frequently impractical. The indirect methods of determining the weight of liquid delivered depend upon the use of weirs, orifices, meters, Pitot tube and the Venturi tube.

The V-Notch Weir. The apparatus consists of a tank divided into two chambers by a dividing sheet as shown by Fig. 7. A 90° V-notch weir is inserted in the top of the dividing sheet.

Behind the weir is the so-called surge chamber or tumbling bay. The tumbling bay is provided with a hook gage with scale and vernier as shown. The reading on the scale is noted when the point of the hook is on the level with the bottom of the V-notch. A reading is made, after the

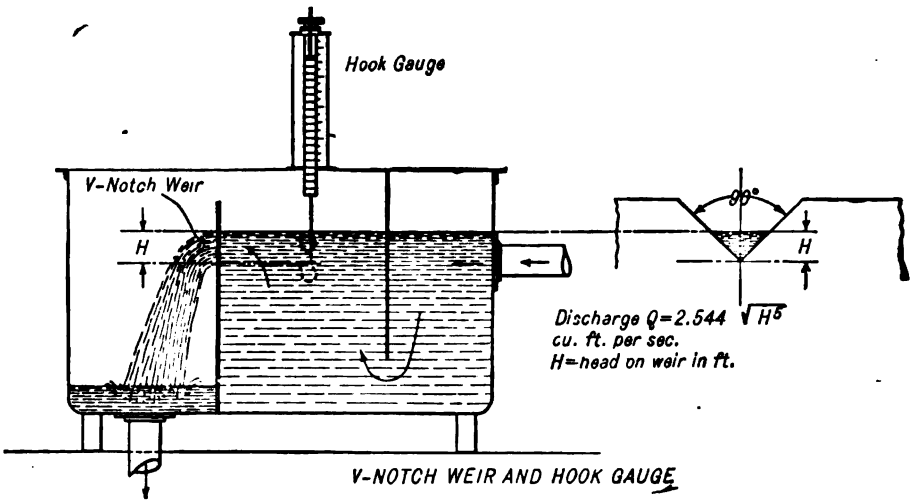

FIG. 7.

flow starts, by raising the gage until the point of the hook begins to pierce the surface of the water. The difference between the two readings gives the head producing the flow over the weir. The formula for the 90° V-notch weir as stated by *Professor James Thompson* is:

$$Q = 2.544 \sqrt{H^5}$$

in which

Q = volume flowing, cu. ft. per sec.
H = head on the weir in ft.

Where possible to adopt in practice, the V-notch weir will give consistent results and is quite extensively used in connection with the open type of feed-water heater. A recording device is readily attached to this apparatus through the medium of a float placed in a well which is in communication with the tumbling bay.

The Venturi Tube. For the measurement of flow in pipes under pressure the Venturi tube (Fig. 8) is a reliable form of meter and is extensively used in practice where accurate and consistent results are desired.

The head or pressure difference H between A in the "up-stream" portion of the contracted tube and B at the throat is made use of in determining the velocity at the throat.

$$V = \frac{A_a}{\sqrt{A^2_a - A^2_b}} \sqrt{2gH} \quad . \quad (1)$$

in which

V = velocity at the throat, ft. per sec.
A_a = area of "up-stream" section of tube sq. ft.
A_b = area of "throat" section, sq. ft.
H = difference in head measured in ft. of water column by the manometer.

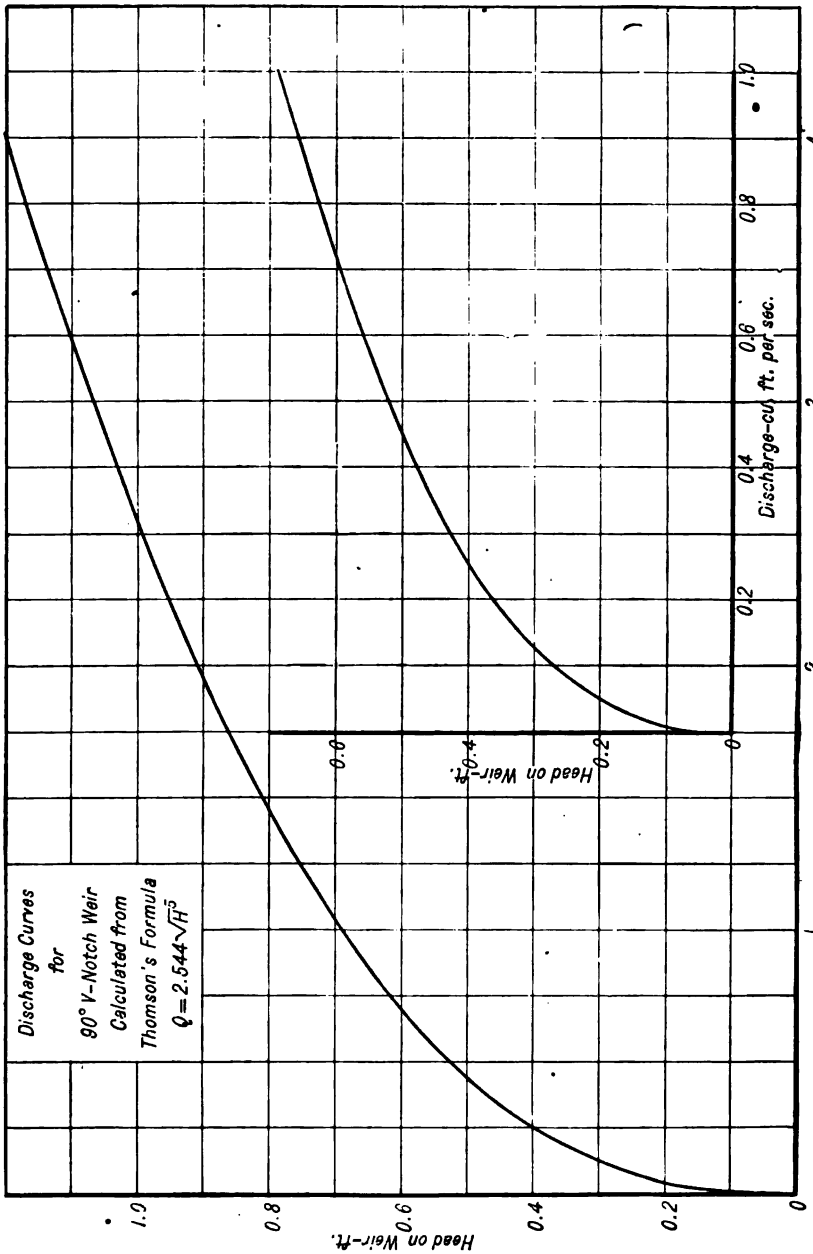

FIG. 7A. DISCHARGE CAPACITIES FOR 90° V-NOTCH WEIR.

The quantity of water discharged is,

$Q = A_b V$ cu. ft. per sec. . . . . (2)

The velocity as determined by the above formula gives results within 3 per cent of the correct value. For extreme accuracy the meter should be calibrated by actually weighing the water for different rates of flow.

Measurement of Flow by Means of the Pitot Tube. As previously shown the Pitot tube

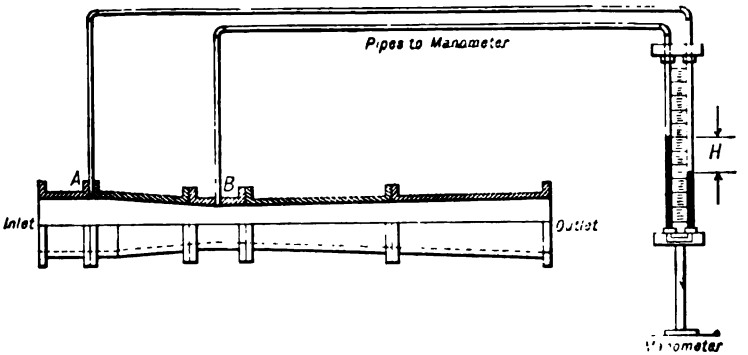

FIG. 8. VENTURI TUBE WITH INDICATING MANOMETER.

indicates the *total pressure* at the point of measurement. If a Pitot tube be placed at the discharge end of a pipe the reading obtained is the velocity head at the center of the pipe.

It is a well-known fact that the velocity is greatest at the center of the pipe and least at the walls. The ratio between these velocities being approximately two to one, for accurate work a traverse of the pipe should be made, as described in the Chapter on "Hot Blast Heating,"* and the relation between the velocity at the center and the mean velocity established.

The traverse velocity curve approximates quite closely an ellipse. The mean average velocity is very nearly equal to 0.84 × the velocity as determined from the reading taken at the center of the pipe.

Let h_v = the velocity head measured at the center of the pipe in feet of water.

V = velocity at center of pipe in ft. per sec.

V_m = mean average velocity, ft. per sec

Then $V_m = 0.84\ V = 0.84\ \sqrt{2gh_v}$

STEAM

Properties of Steam. Steam is water vapor, which exists in the vaporous condition due to the fact that sufficient heat has been added to the water, from which the steam has been formed, to supply the latent heat of evaporation, and change the liquid into vapor. This change in state takes place at a definite and constant temperature, which is determined solely by the pressure of the steam. A change in pressure will always be accompanied by a change in the temperature at which ebullition or boiling will occur, and there will be a corresponding change in the latent heat.

The properties of steam together with other characteristics, are tabulated in the steam tables. See Table 5.

Steam in contact with the water from which it has been generated is known as *saturated steam*, and may be known as *dry saturated steam*, or as *wet saturated steam*. The latter contains more or less actual water in the form of mist or "priming" as it is called.

If dry, saturated steam be heated, and the pressure maintained the same as when it was vaporized, its temperature will increase and it will become *superheated*, that is, its temperature will be higher than that of saturated steam at the same pressure.

* Volume I.

A conception of the relation between the properties or characteristics of steam, and the manner in which the changes in state, temperature and pressure are brought about is shown in Fig. 12 and described in the following paragraphs.

Generation of Steam. Consider a frictionless cylinder, Fig. 9, containing 1 lb. of water at 32° F. Also consider the pressure of the atmosphere to be 14.7 lb. per sq. in. and to be replaced by that of the piston *B*. When heat is applied to the cylinder the temperature of the water

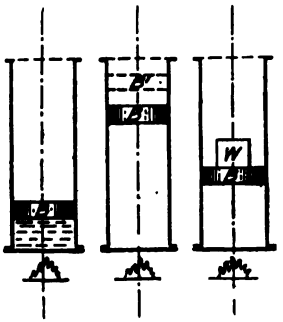

FIG. 9. FIG. 10. FIG. 11.

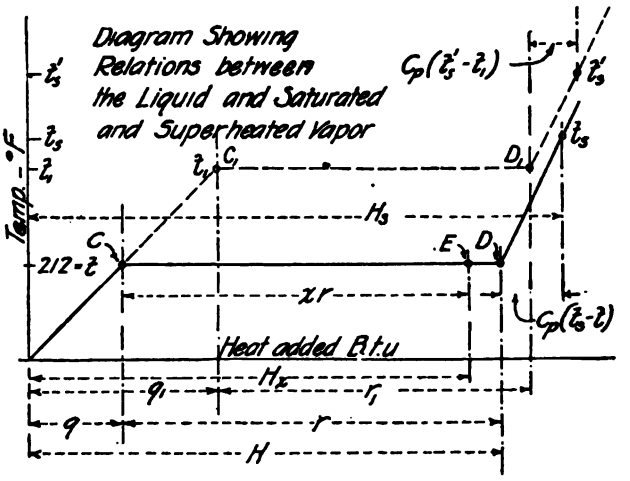

FIG. 12.

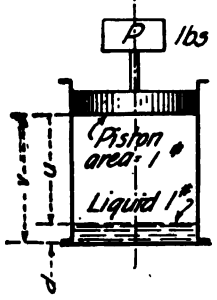

NOTE:-
External work of evaporation = $P(v-d) = Pu$
or in B.t.u = $AP(v-d) = APu$ & $A = \frac{1}{778}$
Since r = total heat of evap then $r - APu$ = internal heat of evap. = ρ necessary to overcome molecular attraction

FIG. 13.

rises until the boiling point, 212° F., is reached. The heat necessary to raise the temperature from 32° F. to the boiling point is known as the "heat of the liquid" or "sensible heat," and is denoted by the symbol q. This condition is denoted on Fig. 12 by the point *C*. The average specific heat of water between 32° F. and 212° F. is 1, hence the number of British thermal units (B.t.u.) necessary to raise the temperature of the water this amount is 212 − 32 or 180 B.t.u.

When more heat is added the water begins to evaporate and expand at constant temperature until, as in Fig. 10, the water is entirely changed into steam. This condition is also shown on Fig. 12, by the point *D*. The heat thus added is known as the "latent heat of evaporation" and is denoted by the symbol r. This heat r is subdivided into two parts. See Fig. 13. First the attraction between the molecules must be broken down. This is known as the internal latent heat and is denoted by the symbol ρ; next the external resistance must be overcome, the weight P being raised against gravity as in Fig. 13. The heat thus added is known as external latent heat and is designated by the symbols APu, where u is the change in volume, in cu. ft. of one pound of water, A is 1/778 and P is the pressure of the atmosphere in pounds per sq. ft. (barometric pressure). It is evident then that the latent heat $r = \rho + APu$, or $\rho = r - APu$. The term APu is the heat equivalent of the work performed for the change in volume from water to steam.

The heat added from the starting point (32° F.) is known as *total heat* (H) or $q + r = H$. If more heat is added, the pressure remaining constant, the temperature of the steam rises and the steam becomes what is known as *superheated steam*. The heat added is equal to the mean specific heat (C_p) of the steam times the change in temperature ($t_s - 212$). Specific heat of steam is the B.t.u. or heat required to raise the temperature of 1 pound of the steam 1° F. Since the specific heat of steam is less than that of water, the slope of this line becomes greater than that of the water line. The point is now located at t_s on Fig. 12, and the steam has increased in volume in the cylinder of Fig. 10 until the piston occupies the dotted position B'.

If instead of the above condition of pressure, additional pressure be added as shown by the weight W in Fig. 11, the temperature of the boiling point will be raised from the temperature of 212° F. to some other point as t_1 in Fig. 12. As may be seen by this figure, the sensible heat q has been increased to q_1. When more heat is added the water is evaporated at the temperature t_1 and if heat again be added the saturated steam will become superheated.

Quality. The proportion of the dry steam per pound of steam delivered by the boiler is known as the quality of the steam and is represented by the symbol x, and the heat (H_x) contained in the steam above 32° F. is $q + xr$ and the state point is located at E in Fig. 12.

The volume of a pound of steam is known as the *specific volume* (v), and, as may be seen by comparing Figs. 10 and 11, decreases as the pressure increases. The reciprocal of this or weight of steam per cu. ft. is known as the *density* and is denoted by d or $\frac{1}{v}$.

The relation between pressure and specific volume for dry saturated steam is given by the experimental equation (*Goodenough*) as $pv^{1.0631} = 484.2$ in which

p = pressure in pounds per sq. in.

v = specific volume.

Another quantity known as *entropy* is made use of in calculations relating to steam engines and turbines, and is defined as the ratio obtained by dividing the quantity of heat added to a substance by the absolute temperature at which it is added. The *entropy of the liquid* is represented by s' or n, the *entropy of vaporization* by $\frac{r}{T}$ and the *entropy of the vapor* s'' or s. The use of entropy is explained under the "Rankine Cycle," in the chapter on "Steam Engines."

The total heat (H) of a dry saturated vapor for any pressure and temperature is the sum of the heats required to raise the temperature of one pound of the liquid from the freezing point to the given temperature and corresponding pressure and *entirely* vaporize it at this pressure. For this case $x = 1$, consequently $H = (\rho + APu) + q = r + q$; $H = 1151.7 + 0.3745\ (t - 212) - 0.00055\ (t - 212)^2$, as stated by *Marks and Davis*.

The total heat (H_x) of wet vapor at any pressure and temperature is the sum of the heats required to raise the temperature of one pound of the liquid from the freezing point to the given temperature and corresponding pressure and to vaporize the part x at this pressure. For this case,

$$H_x = xr + q.$$

It is manifestly incorrect to say this is the heat *in* the vapor as the APu is not heat in the vapor, but the external work performed by the vapor while evaporating.

Heat Content of Saturated Steam. This by definition is $i'' = q + \rho + APv''$ in which v'' is the specific volume of the steam.

The total heat of saturated steam by definition is $H = q + \rho + AP\ (v'' - v')$, in which v' is the specific volume of the liquid.

As v' is small compared with v'' the term Apv' may be neglected, except at very high temperatures and pressures, and i'' and H may be considered equal.

In recent steam tables the values of i'' instead of H are usually tabulated.

Superheated Steam or Vapor. Superheated steam is defined as water vapor which has been

heated, out of contact with its liquid, until its temperature is higher than that of saturated vapor at the same pressure. Moreover, if the temperature or degree of superheat is far removed from the temperature of saturation the superheated vapor will follow the laws of perfect gases quite closely, ($PV = MRT$), except at high pressures or low temperatures. See "Air and Other Gases."

The relation between pressure, volume, and temperature, experimentally determined for superheated steam is $V + 0.256 = 0.5962 \frac{T}{p}$ which *Linde* gives as a rough approximation, where

V = specific volume.
T = absolute temperature.
p = pounds per sq. in.

The *specific heat of superheated steam* is not constant as shown by the experiments of *Knoblauch* and *Jakob*, and others. Curves of mean specific heat are shown in Fig. 14. For any degree of superheat the mean specific heat between the saturation state and the given state is given by the ordinate corresponding to the given degree of superheat and the given pressure. For example, at a pressure of 150 lb. per sq. in. absolute the mean specific heat for 240° superheat is 0.529.

The heat content of superheated steam or vapor may be expressed by the equation $H_s = q + r + C_p (t_s - t) = H + C_p (t_s - t)$ where t_s = temperature of superheated vapor and t = temperature of saturated vapor at the corresponding pressure, q = heat of the liquid at t, and r = heat of vaporisation at temperature t. C_p = mean specific heat of superheated vapor, H = total heat of one pound of dry saturated steam, and H_s = total heat of one pound of superheated steam.

Throttling Calorimeter. The expressions for heat content of a liquid and its vapor, and the heat content of superheated steam, are made use of in finding the part x of a mixture that exists as wet vapor, within certain limits.

This is commonly known as the determination of moisture or "priming" in steam by means of the "throttling" or superheating calorimeter and the necessary data applicable to the above

TABLE 5

PROPERTIES OF SATURATED STEAM

(*G. A. Goodenough*)

Pressure		Temp., ° F.	Volume, Cu. Ft. per Lb.	Weight, Lb. per Cu. Ft.	Heat Content in B.t.u.		Latent Heat in B.t.u.		Entropy		
In. of Mercury	Lb. per Sq. In.				of Liquid	of Vapor	of Vaporisation	Internal	of Liquid	of Vaporisation	of Vapor
p	—	t	v''	$1/v''$	t'	t''	r	ρ	s'	r/T	s''
				d	q	H			$\varkappa$		s
2.036	1	101.76	333.3	0.00300	69.76	1105.4	1035.6	973.9	0.1327	1.8448	1.9775
4.072	2	126.10	173.6	.00576	94.02	1116.2	1022.2	957.9	.1750	1.7452	1.9203
4.6	2.260	130.64	154.8	.00646	98.55	1118.2	1019.7	954.9	.1827	1.7275	1.9103
4.8	2.358	132.24	148.8	.00672	100.14	1118.9	1018.8	953.8	.1854	1.7214	1.9068
6.108	3	141.49	118.7	.00843	109.38	1122.9	1013.5	947.6	.2009	1.6862	1.8871
8.144	4	152.99	90.6	.01104	120.9	1127.9	1007.0	939.9	.2199	1.6438	1.8637
10.180	5	162.25	73.5	.01360	130.1	1131.7	1001.6	933.6	.2348	1.6107	1.8456
12.216	6	170.07	62.0	.01614	137.9	1135.0	997.1	928.2	.2473	1.5835	1.8308
14.25	7	176.85	53.7	.01864	144.7	1137.8	993.1	923.6	.2581	1.5603	1.8184
16.29	8	182.87	47.35	.02112	150.8	1140.3	989.5	919.4	.2675	1.5402	1.8077
18.32	9	188.28	42.41	.02358	156.2	1142.5	986.3	915.6	.2759	1.5223	1.7982
20.36	10	193.21	38.43	.02602	161.1	1144.4	983.3	912.2	.2835	1.5062	1.7897
22.40	11	197.75	35.16	.02844	165.7	1146.2	980.5	909.0	.2905	1.4916	1.7821
24.43	12	201.96	32.41	.03086	169.9	1147.9	978.0	906.0	.2969	1.4783	1.7752
26.47	13	205.88	30.07	.03326	173.8	1149.4	975.6	903.2	.3028	1.4659	1.7687
28.50	14	209.56	28.06	.03564	177.5	1150.8	973.3	900.6	.3083	1.4545	1.7628
29.92	14.697	212	26.81	.03730	180.0	1151.7	971.7	898.8	.3120	1.4469	1.7589
30	14.74	212.13	26.75	.03739	180.1	1151.8	971.7	898.8	.3122	1.4465	1.7587

TABLE 5—(*Continued*)

PROPERTIES OF SATURATED STEAM

(*G. A. Goodenough*)

Absolute Pressure, Lb. per Sq. In.	Temp., ° F.	Volume, Cu. Ft. per Lb.	Weight, Lb. per Cu. Ft.	Heat Content in B.t.u.		Latent Heat in B.t.u.		Entropy		
				of Liquid	of Vapor	of Vaporization	Internal	of Liquid	of Vaporization	of Vapor
p	t	v''	$1/v''$	t'	i''	r	ρ	s'	r/T	s''
			d	q	H			n		s
16	216.3	24.76	0.04038	184.3	1153.4	969.1	895.8	0.3184	1.4337	1.7521
18	222.4	22.18	.04508	190.5	1155.7	965.2	891.4	.3274	1.4153	1.7427
20	228.0	20.10	.04976	196.0	1157.7	961.7	887.3	.3356	1.3987	1.7343
22	233.1	18.38	.0544	201.2	1159.6	958.4	883.6	.3430	1.3837	1.7267
24	237.8	16.95	.0590	206.0	1161.3	955.3	880.1	.3499	1.3698	1.7197
26	242.2	15.73	.0636	210.4	1162.8	952.4	876.8	.3563	1.3570	1.7133
28	246.4	14.67	.0681	214.6	1164.3	949.7	873.7	.3622	1.3452	1.7074
30	250.3	13.76	.0727	218.6	1165.7	947.1	870.7	.3679	1.3340	1.7019
32	254.0	12.95	.0772	222.4	1166.9	944.6	867.9	.3731	1.3236	1.6967
34	257.6	12.24	.0818	225.9	1168.1	942.2	865.2	.3781	1.3137	1.6918
36	260.9	11.60	.0862	229.4	1169.2	939.9	862.7	.3829	1.3044	1.6873
38	264.2	11.03	.0907	232.6	1170.3	937.7	860.2	.3874	1.2956	1.6830
40	267.2	10.51	.0951	235.8	1171.3	935.5	857.8	.3917	1.2871	1.6788
42	270.2	10.04	.0996	238.8	1172.2	933.5	855.5	.3958	1.2791	1.6749
44	276.0	9.61	.1040	241.7	1173.2	931.5	853.3	.3998	1.2714	1.6712
46	275.8	9.22	.1085	244.5	1174.0	929.6	851.2	.4036	1.2640	1.6676
48	278.4	8.86	.1129	247.2	1174.8	927.7	849.1	.4072	1.2570	1.6642
50	281.0	8.53	.1173	249.8	1175.6	925.9	847.1	.4108	1.2501	1.6609
52	283.5	8.22	.1217	252.3	1176.4	924.1	845.1	.4142	1.2436	1.6577
54	285.9	7.93	.1261	254.7	1177.1	922.4	843.2	.4174	1.2373	1.6547
56	288.2	7.67	.1304	257.1	1177.8	920.7	841.4	.4206	1.2311	1.6517
58	290.5	7.42	.1348	259.5	1178.5	919.0	839.5	.4237	1.2252	1.6489
60	292.7	7.18	.1392	261.7	1179.1	917.4	837.8	.4267	1.2195	1.6462
62	294.9	6.97	.1435	263.9	1179.7	915.8	836.0	.4296	1.2139	1.6435
64	296.9	6.76	.1479	266.1	1180.3	914.3	834.3	.4324	1.2085	1.6409
66	299.0	6.57	.1522	268.2	1180.9	912.7	832.7	.4352	1.2032	1.6384
68	301.0	6.39	.1566	270.2	1181.5	911.2	831.1	.4379	1.1981	1.6360
70	302.9	6.22	.1609	272.2	1182.0	909.8	829.5	.4405	1.1931	1.6336
72	304.8	6.05	.1652	274.2	1182.5	908.3	827.9	.4431	1.1883	1.6313
74	306.7	5.90	.1695	276.1	1183.0	906.9	826.4	.4456	1.1835	1.6291
76	308.5	5.75	.1738	278.0	1183.5	905.5	824.9	.4480	1.1789	1.6269
78	310.3	5.61	.1781	279.8	1184.0	904.2	823.4	.4504	1.1744	1.6248
80	312.0	5.48	.1824	281.6	1184.4	902.8	821.9	.4527	1.1700	1.6227
82	313.7	5.35	.1868	283.4	1184.9	901.5	820.5	.4550	1.1657	1.6207
84	315.4	5.23	.1910	285.1	1185.3	900.2	819.1	.4572	1.1615	1.6187
86	317.1	5.12	.1953	286.8	1185.7	898.9	817.7	.4594	1.1574	1.6168
88	318.7	5.01	.1996	288.5	1186.1	897.7	816.3	.4615	1.1534	1.6149
90	320.3	4.905	.2039	290.1	1186.5	896.4	815.0	.4636	1.1495	1.6131
92	321.8	4.805	.2081	291.7	1186.9	895.2	813.7	.4657	1.1456	1.6113
94	323.3	4.709	.2124	293.3	1187.3	894.0	812.4	.4677	1.1419	1.6096
96	324.8	4.617	.2166	294.8	1187.7	892.8	811.1	.4697	1.1381	1.6079
98	326.3	4.528	.2209	296.4	1188.0	891.6	809.8	.4717	1.1345	1.6062
100	327.8	4.442	.2251	297.9	1188.4	890.5	808.6	.4736	1.1309	1.6045
102	329.2	4.359	.2294	299.4	1188.7	889.3	807.4	.4755	1.1274	1.6028
104	330.7	4.279	.2337	300.9	1189.0	888.2	806.1	.4773	1.1239	1.6012
106	332.0	4.202	.2380	302.3	1189.4	887.1	804.9	.4791	1.1205	1.5996
108	333.4	4.128	.2422	303.7	1189.7	885.9	803.8	.4809	1.1172	1.5981
110	334.8	4.057	.2465	305.1	1190.0	884.8	802.6	.4827	1.1138	1.5965
112	336.1	3.988	.2508	306.5	1190.3	883.7	801.4	.4844	1.1106	1.5950
114	337.4	3.921	.2550	307.9	1190.6	882.7	800.3	.4861	1.1074	1.5935
116	338.7	3.857	.2593	309.2	1190.8	881.6	799.2	.4878	1.1043	1.5921
118	340.0	3.795	.2635	310.6	1191.1	880.6	798.0	.4895	1.1012	1.5907
120	341.3	3.735	.2678	311.9	1191.4	879.5	796.9	.4911	1.0982	1.5893
122	342.5	3.676	.2720	313.2	1191.6	878.5	795.8	.4927	1.0952	1.5879
124	343.7	3.620	.2762	314.4	1191.9	877.5	794.8	.4943	1.0922	1.5865
126	345.0	3.566	.2805	315.7	1192.1	876.4	793.7	.4958	1.0894	1.5852
128	346.2	3.513	.2847	316.9	1192.4	875.4	792.6	.4974	1.0865	1.5838
130	347.4	3.461	.2889	318.2	1192.6	874.4	791.6	.4989	1.0836	1.5825
132	348.5	3.412	.2931	319.4	1192.9	873.5	790.5	.5004	1.0808	1.5812
134	349.7	3.363	.2973	320.6	1193.1	872.5	789.5	.5019	1.0781	1.5800
136	350.8	3.316	.3016	321.8	1193.3	871.5	788.5	.5033	1.0754	1.5787
138	352.0	3.270	.3058	323.0	1193.5	870.5	787.4	.5048	1.0727	1.5775
140	353.1	3.226	.3100	324.2	1193.7	869.6	786.4	.5062	1.0700	1.5762
142	354.2	3.182	.3142	325.3	1193.9	868.6	785.4	.5076	1.0674	1.5750
144	355.3	3.140	.3184	326.5	1194.1	867.7	784.5	.5090	1.0648	1.5738

TABLE 5—(*Continued*)

PROPERTIES OF SATURATED STEAM

(*G. A. Goodenough*)

Absolute Pressure, Lb. per Sq. In.	Temp., °F.	Volume, Cu. Ft. per Lb.	Weight Lb. per Cu. Ft.	Heat Content in B.t.u.		Latent Heat in B.t.u.		Entropy		
				of Liquid	of Vapor	of Vapor-ization	Internal	of Liquid	of Vapor-ization	of Vapor
p	t	v''	$1/v''$	i'	i''	r	p	s'	r/T	s''
			d	q	H					s
146	[illegible]	3.099	0.3227	327.6	1194.3	866.8	788.5	0.5104	1.0623	1.5727
148	357.4	3.059	.3269	[illegible]	1194.5	865.8	782.5	.5117	1.0598	1.5715
150	358.5	3.020	.3311	[illegible]	1194.7	864.9	781.6	.5131	1.0573	1.5704
152	359.5	2.982	.3353	[illegible]	1194.9	864.0	780.6	.5144	1.0548	1.5692
154	360.5	2.945	.3396	332.0	1195.1	863.1	779.7	.5157	1.0524	1.5681
156	361.6	2.909	.3438	333.1	1195.3	862.2	778.7	.5170	1.0500	1.5670
158	[illegible]	2.874	.3480	334.1	1195.5	861.4	777.8	.5183	1.0476	1.5659
160	[illegible]	2.839	.3522	335.2	1195.7	860.5	776.9	.5196	1.0452	1.5649
162	364.5	2.806	.3564	336.2	1195.8	859.6	776.0	.5209	1.0429	1.5638
164	365.6	2.773	.3606	337.3	1196.0	858.7	775.1	.5221	1.0406	1.5627
166	366.5	2.741	.3648	338.3	1196.2	857.9	774.2	.5233	1.0384	1.5617
168	367.5	2.710	.3691	339.3	1196.3	857.0	773.3	.5245	1.0361	1.5607
170	368.5	2.679	.3733	340.3	1196.5	856.2	772.4	.5258	1.0339	1.5597
172	369.4	2.649	.3775	341.3	1196.6	855.3	771.5	.5270	1.0317	1.5587
174	370.4	2.620	.3817	342.3	1196.8	854.5	770.6	.5281	1.0295	1.5577
176	371.3	2.591	.3859	343.3	1196.9	853.6	769.8	.5293	1.0274	1.5567
178	372.2	2.563	.3901	344.3	1197.1	852.8	768.9	.5305	1.0252	1.5557
180	373.1	2.536	.3943	345.2	1197.2	852.0	768.0	.5316	1.0231	1.5547
182	374.0	2.509	.3985	346.2	1197.4	851.2	767.2	.5328	1.0210	1.5538
184	374.9	2.483	.4027	347.1	1197.5	850.4	766.4	.5339	1.0189	1.5528
186	375.8	2.457	.4069	348.1	1197.6	849.5	765.5	.5350	1.0169	1.5519
188	376.7	2.432	.4111	349.0	1197.8	[illegible]	764.7	.5361	1.0148	1.5509
190	377.6	2.408	.4154	350.0	1197.9	847.9	763.9	.5372	1.0128	1.5500
192	378.5	2.383	.4196	350.9	1198.0	847.1	763.0	.5383	1.0108	1.5491
194	379.3	2.360	.4238	351.8	1198.1	846.3	762.2	.5394	1.0089	1.5482
196	380.2	2.337	[illegible]	352.7	1198.2	845.6	761.4	[illegible]	1.0069	1.5473
198	381.0	2.314	[illegible]	353.6	1198.4	844.8	760.6	[illegible]	1.0049	1.5464
200	381.9	2.292	[illegible]	354.5	1198.5	844.0	759.8	[illegible]	1.0030	1.5456
202	382.7	2.270	[illegible]	355.4	1198.6	843.2	759.0	[illegible]	1.0011	1.5447
204	383.5	2.248	[illegible]	356.2	1198.7	[illegible]	758.2	.5446	0.9992	1.5438
206	384.4	2.227	.4490	[illegible]	1198.8	[illegible]	757.4	.5457	.9973	1.5430
208	385.2	2.206	.4532	358.0	1198.9	[illegible]	756.7	.5467	.9954	1.5421
210	386.0	2.186	.457	358.8	1199.0	[illegible]	755.9	.5477	.9936	1.5413
212	386.8	2.166	.462	359.7	1199.1	[illegible]	755.1	.5487	.9918	1.5405
214	387.6	2.147	.466	360.5	1199.2	[illegible]	754.3	.5497	.9900	1.5396
216	388.4	2.128	.470	361.4	1199.3	[illegible]	753.6	.5507	.9881	1.5388
218	389.2	2.109	.474	362.2	1199.4	[illegible]	752.8	.5516	.9864	1.5380
220	390.0	2.090	.478	363.0	1199.5	[illegible]	752.1	.5526	.9846	1.5372

equations for heat content are obtained by causing a sample of the wet saturated steam from the boiler, at high pressure, to pass through a small orifice and expand to a lower pressure without doing any external work. The total heat of saturated steam at the lower pressure is less than the total heat of saturated steam at the higher pressure. Since, however, the steam in expanding from a high pressure to a lower pressure does no external work, and assuming no radiation loss, no heat is added or taken away from the system. Then according to the Law of Conservation of Energy, since the velocity before and after expansion is zero, it may readily be shown that the heat content per pound must also be the same before and after expansion and some heat will be available for drying and superheating the steam at the lower pressure.

Example. Refer to Fig. 15, showing a *throttling calorimeter* connected to a steam pipe, and assume that steam at 160 lb. gage is flowing in the steam pipe. Some of this steam enters the holes in the "sampling pipe" if the gate valve is opened wide, and passes by the upper thermometer, which records its temperature of 370.7° F., and then through a $\frac{1}{8}$" diameter orifice in the disk between the two flanges, where free expansion takes place; the pressure changing from 160 lb. gage to that of the atmosphere. The lower thermometer indicates the temperature after expansion, and if no superheating takes place it will read 212° F. at normal atmospheric pressure.

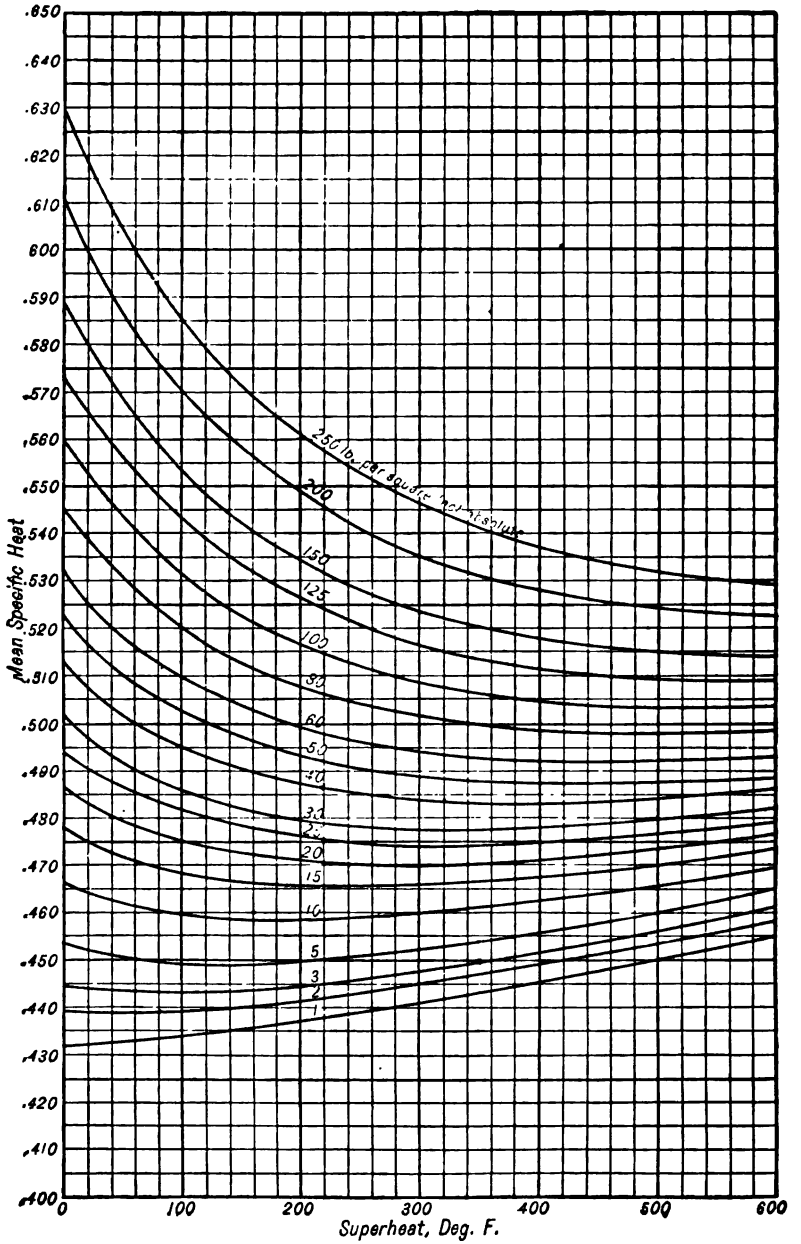

FIG. 14. MEAN SPECIFIC HEAT CURVES.
(*G. A. Goodenough*)

If the steam is absolutely dry and saturated in the main steam pipe the total heat H is 1196.9 B.t.u. per pound, and at atmospheric pressure the total heat H per pound of dry saturated steam is 1151.7 B.t.u. As the heat content must be the same after free expansion as before there is available 1196.9 − 1151.7 or 45.2 B.t.u., which goes to superheat the steam at the lower pressure. The amount of superheat or the number of degrees above the saturation temperature, corresponding to atmospheric pressure, to which the steam after free expansion will be raised is $\frac{45.2}{0.47} = 96.2°$, where 0.47 is the mean specific heat of superheated steam at atmospheric pressure. Hence the lower thermometer will read 212 + 96.2 = 308.2° F., if no moisture is present in the original steam.

FIG. 15. THROTTLING CALORIMETER AND SAMPLING NOZZLE.

If the original steam contains, say 1 per cent of moisture, it will take 8.5 B.t.u. to evaporate this moisture at 370.7° F. since the latent heat at this temperature is 854.2 B.t.u. per lb. We will then have left for superheating 45.2 − 8.5 = 36.7 B.t.u. or the steam will be superheated only $\frac{36.7}{0.47} = 78.1°$ F.

It is readily seen that as the moisture increases less and less heat will be available for superheating, until finally no superheating will occur and *the limit of moisture determination by the throttling calorimeter* for steam at this pressure will have been reached.

The general formula for finding the quality of steam by this apparatus at any pressure is given below:

$H_x = H_s$ where $H_x = x\, r_1 + q_1$ = total heat of one pound of steam at the initial pressure.

$H_s = r_2 + q_2 + C_p\,(t_s - t_2)$ = total heat of one pound of steam at the final or atmospheric pressure.

$$\text{Hence } x\, r_1 + q_1 = r_2 + q_2 + C_p\,(t_s - t_2)$$

$$x = \frac{r_2 + q_2 + C_p\,(t_s - t_2) - q_1}{r_1}$$

r_1 and r_2 = latent heat of vaporisation at the initial and final pressures respectively.
q_1 and q_2 = heat of the liquid at the initial and final pressures respectively.
C_p = mean specific heat of superheated steam (see Fig. 14).
t_s = temperature of steam after superheating.
t_2 = temperature of saturated steam at the final pressure (atmosphere).

The limit of moisture or maximum value of $1 - x$, is found by making $t_s = t_2$ for any given case and solving for x. These limits range from 2.88 per cent at 50 lb. gage to 7.17 per cent moisture at 250 lb. gage, at sea level.

Practically there are slight errors in the process due to the exposed stem of the thermometer, and the radiation loss from the instrument. The stem correction can be made as already indicated, and by heavily lagging the instrument the radiation loss can be largely overcome. Both errors tend to reduce the reading of the lower thermometer, t_2.

FIG. 16. COMPACT THROTTLING CALORIMETER.

FIG. 17. SEPARATING CALORIMETER.

A very compact form of the throttling calorimeter is shown in Fig. 16.

For very "wet" steam *a separating calorimeter* must be used, and a section of such an apparatus is shown in Fig. 17. This apparatus is in effect a small separator which mechanically separates the entrained water from the steam and collects it in a reservoir (R) where its amount

is indicated in a gage glass (G), while dry steam only escapes at the orifice (O). This orifice is of known size, and if the pressure in the chamber (C) is known the weight of dry steam passing the orifice can be calculated, or a gage (P) can be calibrated to read directly, the weight of steam flowing in pounds, provided the absolute pressure is not less than 25.37 lb. where the orifice discharges into the atmosphere. For absolute pressures lower than this a calculation must be made as stated by the formula under "Flow of Steam through Orifices."

Mixtures of Air and Saturated Water Vapor. The method of calculating the weight of water vapor mixed with air, for various conditions of pressure and temperature, will be found in the Chapter on "Cooling Ponds and Towers." A table and diagram are included for convenience in solving problems relative to the subject.

Flow of Steam Through Pipes. Various formulas for the flow of steam through pipes have been advanced, having their basis upon *Bernoulli's* theorem of the flow of water through circular pipes with the proper modifications made for the variation in constants between steam and water. *Unwin's* formula based on *Weisbach's* work is very commonly used and may be stated as follows:

$$h = f \times \frac{2\,L}{D} \times \frac{v^2}{g} \text{ See "Friction Head due to Flow of Water"} \quad . \quad . \quad . \quad . \quad . \quad (1)$$

in which h represents the loss of head in feet of the fluid flowing, in this case steam, which is passing with a velocity of v feet per second, through a pipe D feet in diameter, and L feet long; g represents the acceleration due to gravity, and f the coefficient of friction.

Numerous values have been given for this coefficient of friction, f, which, from experiment, apparently varies with both the diameter of pipe and the velocity of the passing steam. There are no authentic data on the rate of this variation with velocity, and, as in all experiments, the effect of change of velocity has seemed less than the unavoidable errors of observation, the coefficient is assumed to vary only with the size of the pipe.

Unwin established a relation for this coefficient for steam at a velocity of 100 feet per second.

$$f = \mathrm{K}\left(1 + \frac{3}{10\,D}\right) \quad . \quad . \quad . \quad . \quad . \quad . \quad . \quad . \quad . \quad . \quad . \quad . \quad . \quad . \quad . \quad (2)$$

where K is a constant experimentally determined, and D the internal diameter of the pipe in feet.

If d represents the density of the steam or weight per cubic foot, and p the loss of pressure due to friction in pounds per square inch, then

$$p = \frac{hd}{144} \quad . \quad . \quad . \quad . \quad . \quad . \quad . \quad . \quad . \quad . \quad . \quad . \quad . \quad . \quad . \quad . \quad . \quad (3)$$

and from equations (1), (2), and (3),

$$p = \frac{dv^2\,L}{72\,g\,D} \times K\left(1 + \frac{3}{10\,D}\right) \quad . \quad . \quad . \quad . \quad . \quad . \quad . \quad . \quad . \quad . \quad . \quad . \quad (4)$$

To convert the velocity term into weight and to reduce to units ordinarily used let D_1 = the diameter of pipe in inches = $12D$, and w = the weight of steam in pounds per minute; then

$$w = 60v \times \frac{\pi}{4} \times \left(\frac{D_1}{12}\right)^2 \times d$$

$$\text{and, } v = \frac{9.6\,w}{\pi\,D_1^2\,d}$$

Substituting this value and that of D in formula (4)

$$p = 0.04839\,K\left(1 + \frac{3.6}{D_1}\right)\frac{w^2\,L}{d\,D_1^5} \quad . \quad . \quad . \quad . \quad . \quad . \quad . \quad . \quad . \quad . \quad . \quad . \quad . \quad . \quad . \quad . \quad (5)$$

Some of the experimental determinations for the value of K for steam are:

$K = 0.0026$ (*R. C. Carpenter*).
$K = 0.0027$ (*G. H. Babcock*).

Substituting the value 0.0027 in formula (5) gives,

$$p = 0.000131 \left(1 + \frac{3.6}{D_1}\right) \times \frac{w^2 L}{d D_1^5} \quad \ldots\ldots\ldots\ldots\ldots\ldots \quad (6)$$

$$\text{and, } w = 87.5 \left[\frac{p d D_1^5}{\left(1 + \frac{3.6}{D_1}\right) \times L}\right]^{\frac{1}{2}} \quad \ldots\ldots\ldots\ldots\ldots\ldots \quad (7)$$

in which the various symbols have already been defined.*

This formula is the one most generally accepted in this country for the flow of steam in pipes.

Equation (4) may be written,

$$V = 16{,}050 \left[\frac{p D_1}{L d \left(1 + \frac{3.6}{D_1}\right)}\right]^{\frac{1}{2}}, \text{ in which } V = \text{velocity of the steam in ft. per min.}$$

Equation (6) may be written,

$$p = A \times \frac{w^2 L}{d} \quad \ldots\ldots\ldots\ldots\ldots\ldots \quad (8)$$

in which $$A = \frac{0.000131 \left(1 + \frac{3.6}{D_1}\right)}{D_1^5}$$

Equation (7) may be written,

$$w = C \left[\frac{p d}{L}\right]^{\frac{1}{2}} \quad \ldots\ldots\ldots\ldots\ldots\ldots \quad (9)$$

in which $$C = 87.5 \left[\frac{D_1^5}{\left(1 + \frac{3.6}{D_1}\right)}\right]^{\frac{1}{2}}$$

For values of A and C see Table 6.

Equivalent Length of Pipe for Each Globe Valve, Entrance, and Elbow. In addition to the loss of pressure due to friction, in straight pipe, there is also a loss of pressure due to a change in the velocity of the steam at the entrance to the pipe. This drop in pressure due to getting up velocity in the pipe is very slight and is seldom taken into account.

Elbows, globe valves, and a square-ended entrance to the pipe, such as occurs when steam is taken off through a tee at right angles to the main, all offer resistance to the flow of steam, thus causing a drop in pressure, which should be taken into account and proper allowance made for it.

Friction is greater through short radius elbows and tees, than through elbows and tees of long radius. The resistance offered by a globe valve is about ½ greater than that due to a short radius elbow, whereas gate valves offer practically no resistance to the flow, providing they are opened wide. The resistance offered by a square-ended opening, or at the outlet of a

*d, the density, is taken as the mean density at the initial and final pressures and in exact work on pipes up to 5" diameters actual internal diameters should be used.

tee where a branch is taken off at right angles, is about the same as that for a globe valve having the same size opening. The resistance offered by a long radius pipe bend is very slight and may be taken as equal to the resistance offered by the same length of straight pipe, or in other words, all pipe bends may be considered as straight pipe of equal length.

TABLE 6

Nominal Pipe Size—Inches	Actual Inside Diameter * Inches = D_1	Values of Constant "C"	Values of Constant "A"	Equivalent Length of Pipe, in Feet, to [illegible] for each Globe Valve and Entrance	Equivalent Length of Pipe in Feet, to be Added for each 90° Elbow
1	1.047	46	0.000,466	2	1.5
1¼	1.[illegible]	[illegible]		4	3.0
1½	1.[illegible]	159		5	3.5
2	2.067	320		7	5
2½	2.467	543		10	6
3	3.066	977		14	9
3½	3.548	1,410		17	11
4	4.026	2,016		20	13
4½	4.508	2,795		24	16
5	5.045	3,724		28	19
6	6.065	6,210		37	24
7	7.023	9,198		44	29
8	7.981	13,050		53	35
9	8.937	17,787		61	41
10	10.018	23,605		70	47
11	11	30,276		78	52
12	12	38,074		[illegible]	58
	14	56,862		106	70
	16	80,384		123	82
	18	109,231		143	95
	20	143,120		162	107
	22	183,870		181	120
	24	229,993		200	132

It is customary to consider the resistance offered by valves and fittings, etc., as equivalent to a length of straight pipe which will offer the same resistance, or cause the same drop in pressure. When this equivalent length has been determined it should be added to length L in the formula, and p, or w, computed accordingly.

Equivalent length of straight pipe, in inches, to be added for each globe valve, or square-ended opening

$$= \frac{144\ D_1}{\left(1 + \frac{3.6}{D_1}\right)}.$$

Equivalent length of straight pipe, in inches, to be added for each 90-deg. elbow in the line

$$= \frac{76\ D_1}{\left(1 + \frac{3.6}{D_1}\right)}.$$

Where D_1 = inside diameter of pipe in inches. The values in Table 6 have been computed from the above formulas.

Example: Let it be required to determine the pressure loss in a pipe line for the following conditions:

$$D_1 = 5'' \qquad L = 300' \qquad w = 250 \text{ lb.}$$

Steam pressure = 150 lb. gage, or 165 lb. absolute.

$$d = \frac{1}{v} = \frac{1}{2.755} = 0.363 \text{ (from Table 5).}$$

* NOTE. – All pipe 14 inches diameter and up is rated by its outside diameter. Inside diameter varies with wall thickness, and hence the outside diameters have been used as approximately correct in these large sizes.

From Table 6, value of constant $A = 0.000,000,07$. By substitution in equation (8)

$$p = 0.000,000,07 \times \frac{250^2 \times 300}{0.363} = 3.62 \text{ lb. per sq. in.}$$

Steam Flow Chart. The use of *steam flow charts* based on the above formulas is very general in engineering practice, and a variety of these charts have been prepared using various coordinates depending on the relations which are to be expressed. Thus charts may be laid out to show velocity of flow, weight of steam, or pressure loss. The latter value is most often required in proportioning a piping system, and the following logarithmic chart, Fig. 18, by *Professor H. V. Carpenter* will be found very useful, as it shows the relation between size of pipe, average pressure, drop in pressure, and weight of steam passing in pounds per minute.

Examples. Follow the heavy dotted lines, and assume an allowable pressure loss of 0.3 lb. per 100 ft. for a 3-in. pipe at an average pressure of 80 lb. absolute. The weight of steam delivered will be 21 lb. per min. Again, assume a drop of 1 lb. per 100 ft. for a 10-in. pipe delivering 860 lb. per min. The average absolute pressure must be 60 lb. per sq. in. Finally, assume a 20-in. pipe is delivering 4,000 lb. per min. at an average absolute pressure of 250 lb. per sq. in. The drop in pressure will be 0.15 lb. per 100 ft. of pipe.

Professor Carpenter says, regarding the accuracy of the charts: "They represent the formulas exactly, except for the inaccuracies in drawing and in reading the scales. These errors are far within the limits of accuracy needed in practice so the charts may be used with the same degree of confidence as the formulas.

"As to the accuracy and range of the formulas, it seems that all the published experiments were made with pipes of from 1.85 to 4.0 in. in diameter. There is little doubt that the formulas may be applied with entire safety over a much wider range than this, but the practical limits are unknown."

Flow of Steam Through Orifices. The flow of steam from a higher to a lower pressure increases as the difference in pressure increases to a point where *the absolute terminal pressure becomes 58 per cent of the absolute initial pressure*. Below this point the flow is not increased by a reduction of the terminal pressure, even to the extent of a perfect vacuum. The lowest initial pressure for which this statement holds, when steam is discharged into the atmosphere, is 25.37 lb. For any pressure below this figure, the atmospheric pressure, 14.7 lb., is greater than 58 per cent of the initial pressure.

Napier deduced the following approximate formula for the flow of steam through an orifice.

$$W = \frac{p\,a}{70}.$$

Where W = the pounds of steam flowing per second,
p = the absolute pressure in pounds per square inch,
and a = area of the orifice in square inches.

In some experiments made by *Professor C. H. Peabody* on the flow of steam through pipes from ¼ in. to 1½ in. long and ¼ in. in diameter, with rounded entrances, the greatest difference from *Napier's* formula was 3.2 per cent excess of the experimental over the calculated results.

For steam flowing through an orifice from a higher to a lower pressure where the lower pressure is greater than 58 per cent of the higher, the flow per minute may be calculated from the formula:

$$W = 1.9\,A\,K\sqrt{(P - d)\,d}$$

Where W = the weight of steam discharged in pounds per minute,
A = area of orifice in square inches,
P = the absolute initial pressure in pounds per square inch,

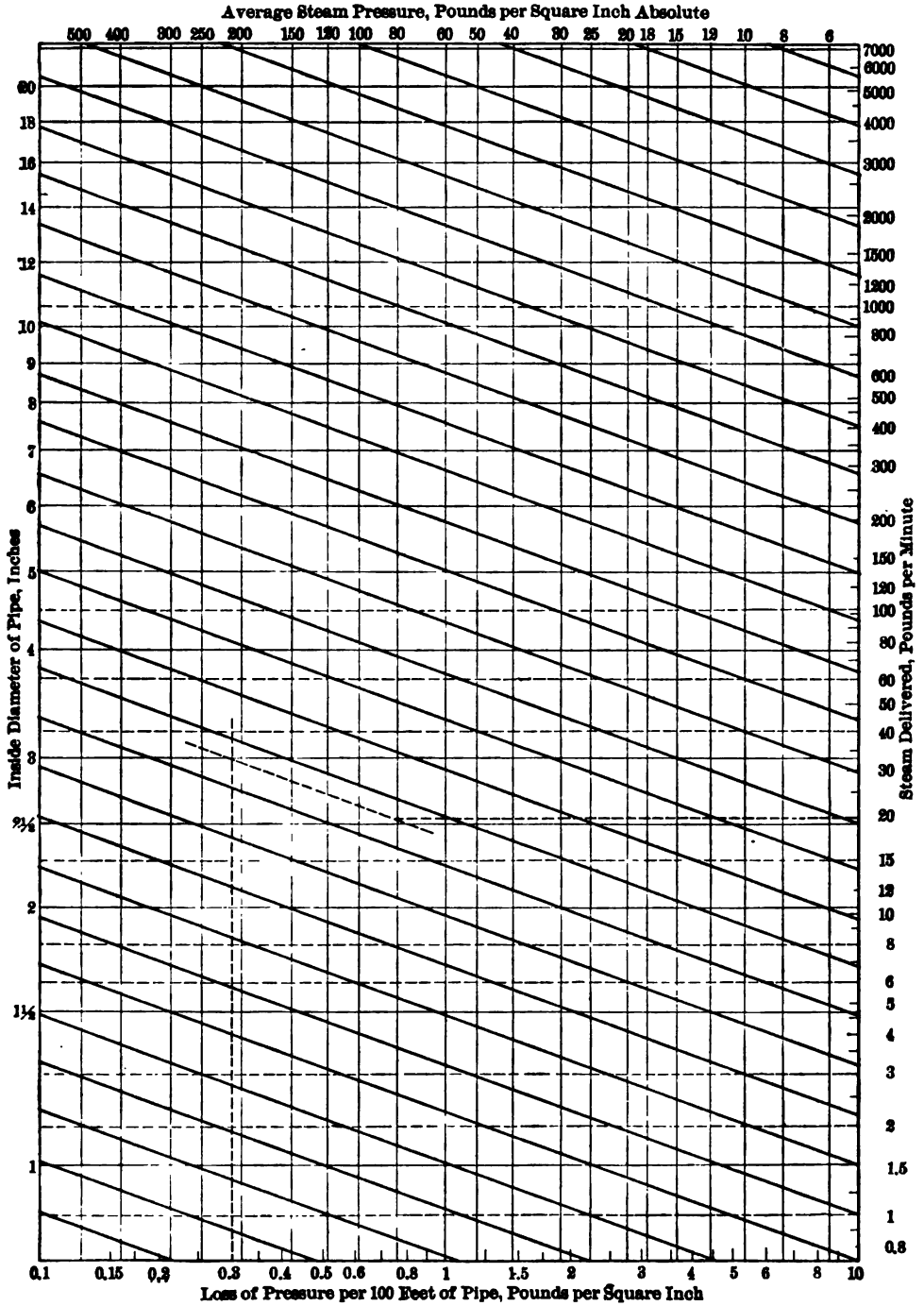

FIG. 18. CHART SHOWING LOSS OF PRESSURE WHEN A GIVEN AMOUNT OF STEAM PER MINUTE IS DELIVERED THROUGH A PIPE OF GIVEN SIZE.—*H. V. Carpenter.*

d = the difference in pressure between the two sides in pounds per square inch,
K = a constant = 0.93 for a short pipe, and 0.63 for a hole in a thin plate or a safety valve.

Example. Let it be required to determine the weight of steam flowing per min. from a boiler into the atmosphere through a short length of 1-in. pipe, for the following conditions:
Initial pressure in boiler (p) = 100 lb. absolute.
Internal area of 1-in. standard pipe (a) = 0.864 sq. in.
By substitution in *Napier's* formula

$$W = \frac{100 \times 0.864}{70} = 1.206 \text{ lb. per sec. or weight per min.} = 60 \times 1.206 = 72.48 \text{ lb.}$$

Measurement of Steam Flow. All steam meters for either indicating or recording the weight of steam flowing in a pipe are based on the following law:

$$W = A\,d\,V$$

in which
W = weight of steam flowing per sec.
A = internal area of pipe, sq. ft.
d = density of steam.
V = velocity, ft. per sec.

The density of steam is a function of the pressure and the quality, x, if it is wet saturated which is the usual condition in practice. The quality may be determined by means of a throttling or separating calorimeter previously described. The velocity in the Pitot tube type of meters, of which the *General Electric Co.'s* and the *Gebhardt* types are examples, is determined

FIG. 19. PRINCIPLE OF THE PITOT-TUBE TYPE OF STEAM METER.

from the velocity head or pressure, measured by the height of a column of water or mercury supported by this head or pressure (Fig. 19).

The static head or pressure on the liquid column W is transmitted through the upper connection s while the total or dynamic pressure is transmitted to the liquid column by means of the tube D bent at right angles to the flow.

The height H of the liquid column is a measure of the difference between the total and static pressure, and is therefore an indication of the velocity head or pressure existing at the point of measurement. The relation between the height of the liquid in the tube and the velocity at the center of the pipe is determined from the following equation:

$$V = C\sqrt{2gh} \quad \ldots\ldots\ldots\ldots\ldots\ldots \quad (1)$$

in which
V = mean velocity of flow over entire cross section, ft. per sec.
h = height of a column in feet of the medium flowing.

C = a coefficient to correct for the average rate of flow as determined by experiment for various sizes of pipes.

The actual measurement of the velocity head is made in inches of water or mercury.

Let k = density of the liquid used in the tube.

d = density of the steam.

H = velocity head measured in inches of the liquid used in the tube or manometer.

$$12\,d\,h = k\,H \text{ or } h = \frac{kH}{12\,d}.$$

Substituting the value of h in (1)

$$V = C\sqrt{\frac{g\,k\,H}{6\,d}} \quad \ldots\ldots\ldots\ldots \quad (2)$$

The commercial form of this type of meter gives results within 2 per cent of actual condenser weights for velocity pressures corresponding to 1 inch or more of water.

The calibration of the indicating column to read the weight of steam flow direct is best made by weighing the water from a condenser to which the steam is delivered.

For a description of various forms of steam flow meters see *Carpenter and Diederichs* "Experimental Engineering," also "Steam Power Plant Engineering" by *G. F. Gebhardt.*

AIR AND OTHER GASES

Properties of Air and Other Gases. Air is the most general example of a so-called perfect or permanent gas to be found in nature, and like the other so-called perfect gases conforms more or less closely to the laws of perfect gases. These laws are stated in the following paragraphs.

Pure dry air is a mechanical mixture of oxygen and nitrogen, that is, the oxygen and nitrogen can be separated from each other by purely physical means. This mixture is made up as follows:

	By Volume	By Weight
Oxygen	20.91%	23.15%
Nitrogen	79.09	76.85

Air as found in nature always contains other constituents in varying amounts such as carbon dioxide, ozone, water vapor, dust, bacteria, etc. See the Chapter on "Ventilation and Air Analysis."*

The *specific density*, or weight per cu. ft. of dry air decreases with the temperature, and conversely the *specific volume*, or volume per pound, which is always the reciprocal of the density, increases with the temperature. See Table 7 for properties of dry air.

The specific heat of air at constant pressure, or the B.t.u. required to raise one pound 1° F. at the pressure of the atmosphere, varies from 0.2375 to 0.2430 as determined by various investigators. The value 0.24 is recommended for engineering calculations.

It has been found that a given volume of air expands when heated under constant pressure, and again that if the temperature of a given volume of air is kept constant and the pressure increased, contraction takes place. These changes follow perfectly definite laws, which apply to other gases as well as air, known as "The Laws of Perfect Gases." These laws do not apply to steam, since it is not a perfect gas.

Boyle's Law refers to the relation between the pressure and volume of a gas, and may be stated as follows: With temperature constant, the volume of a given weight of gas varies inversely as its absolute pressure. Hence if P_1 and P_2 represent the initial and final absolute pressures and V_1 and V_2 represent corresponding volumes of the same mass, say 1 lb. of gas, then $\frac{V_1}{V_2} = \frac{P_2}{P_1}$ or $P_1V_1 = P_2V_2$, but since P_1V_1 for any given case is a definite constant quantity, it

* Volume I.

follows that the product of the absolute pressure and volume of a gas is a constant, or $PV = C$, when T is kept constant.

Any change in the pressure and volume of a gas at constant temperature, as indicated above, is called an *isothermal* change.

Charles' Law refers to the relation between pressure, volume, and temperature of a gas and may be stated as follows: The volume of a given weight of gas varies directly as the absolute temperature at constant pressure, and the pressure varies directly as the absolute temperature at constant volume. Hence, when heat is added at constant volume V_c, we have the equation: $\frac{P_2}{P_1} = \frac{T_2}{T_1}$ or for the same temperature range, at constant pressure P_c, the relation is $\frac{V_2}{V_1} = \frac{T_2}{T_1}$.

In general we have for any weight of gas M, since volume is proportional to weight at any given volume and temperature, the relation

$$PV = MRT$$

which is the characteristic equation for a perfect gas. In this formula

P = the absolute pressure of the gas in pounds per square foot.

V = the volume of the weight M in cubic feet.

M = the weight in pounds of the gas taken.

R = a constant depending on the nature of the gas.

T = the absolute temperature in degrees F.

A perfect gas conforms exactly to the above equation, and while no gases are "perfect" in this sense they conform so nearly that the above equation will apply to most engineering computations.

Another form of the characteristic equation is sometimes used, in which M and R are eliminated. Let P_0, V_0, and T_0 denote the initial condition of a given quantity of a gas which undergoes a change in pressure, volume and temperature, the second condition being denoted by P, V, and T. For the initial condition then $P_0 V_0 = MRT_0$ or $\frac{P_0 V_0}{T_0} = MR$, and for the second condition $PV = MRT$ or $\frac{PV}{T} = MR$ so that the left hand members of the two equations are equal to each other, or $\frac{P_0 V_0}{T_0} = \frac{PV}{T}$.

So long as the same units are used for pressure, as pounds or ounces, and the same units are used for volume, as cu. ft. or cu. meters, and the temperatures are expressed in the same absolute scale it makes no difference what these units may be and the above equation holds.

In order to determine the value of R for any gas we must know the absolute pressure and temperature, and the volume in cu. ft. of one pound. For air at sea level, the absolute pressure is 14.7 lb. per sq. in or 2146.3 lb. per sq. ft. and at a temperature of 32° F. the absolute temperature is 32 + 459.6 = 491.6 °F., and the volume is 12.39 cu. ft. per 1 lb. Now since $R = \frac{PV}{T}$ we have $R = \frac{2146.3 \times 12.39}{492} = 53.37$ *a constant for air.*

It follows then that the volume of 1 lb. of air (known as the specific volume) at any temperature and pressure, can be found at once by the equation $V = \frac{53.37 \times T}{P}$, and the value of R for other gases will be directly proportional to the specific volumes of such gases and air. See Table 8.

TABLE 7

PROPERTIES OF DRY AIR

Barometric Pressure 29.921 Inches

Temperature, Degrees Fahr.	Weight per Cubic Foot, Pounds	Per Cent of Volume at 70° F.	B.t.u. Absorbed by One Cubic Foot Dry Air per Degree F.	Cubic Foot Dry Air Warmed One Degree per B.t.u.
0	0.08686	0.8680	0.02080	48.08
5	.08544	.8772	.02060	48.55
10	.08453	.8867	.02039	49.05
15	.08363	.8962	.02018	49.56
20	.08276	.9057	.01998	50.05
25	.08190	.9152	.01977	50.58
30	.08107	.9246	.01957	51.10
35	.08025	.9340	.01938	51.60
40	.07945	.9434	.01919	52.11
45	.07866	.9530	.01900	52.64
50	.07788	.9624	.01881	53.17
55	.07713	.9718	.01863	53.68
60	.07640	.9811	.01846	54.18
65	.07567	.9905	.01829	54.68
70	.07495	1.0000	.01812	55.19
75	.07424	1.0095	.01795	55.72
80	.07356	1.0190	.01779	56.21
85	.07289	1.0283	.01763	56.72
90	.07222	1.0380	.01747	57.25
95	.07157	1.0472	.01732	57.74
100	.07093	1.0570	.01716	58.28
105	.07030	1.0660	.01702	58.76
110	.06968	1.0756	.01687	59.28
115	.06908	1.0850	.01673	59.78
120	.06848	1.0945	.01659	60.28
125	.06790	1.1040	.01645	60.79
130	.06732	1.1133	.01631	61.32
135	.06675	1.1230	.01618	61.81
140	.06620	1.1320	.01605	62.31
145	.06565	1.1417	.01592	62.82
150	.06510	1.1512	.01578	63.37
160	.06406	1.1700	.01554	64.35
170	.06304	1.1890	.01530	65.36
180	.06205	1.2080	.01506	66.40
190	.06110	1.2270	.01484	67.40
200	.06018	1.2455	.01462	68.41
220	.05840	1.2833	.01419	70.48
240	.05673	1.3212	.01380	72.46
260	.05516	1.3590	.01343	74.46
280	.05367	1.3967	.01308	76.46
300	.05225	1.4345	.01274	78.50
350	.04903	1.5288	.01197	83.55
400	.04618	1.6230	.01130	88.50
450	.04364	1.7177	.01070	93.46
500	.04138	1.8113	.01018	98.24
550	.03932	1.9060	.00967	103.42
600	.03746	2.0010	.00923	108.35
700	.03423	2.1900	.00847	118.07
800	.03151	2.3785	.00782	127.88
900	.02920	2.5670	.00728	137.37
1000	.02720	2.7560	.00680	147.07
1200	.02392	3.1655	.00603	165.83

Specific Heat of Gases. Reference has already been made to the fact that gases have two specific heats, one is the *specific heat at constant pressure* C_p and the other the *specific heat at constant volume* C_v.

The value of C_v can be found experimentally if we take one pound of gas occupying a fixed volume V_1 at pressure P_1. The absolute temperature is then $T_1 = \frac{P_1 V_1}{R}$. Now add heat to this gas and its temperature and pressure will become P_2 and T_2. No external work has been done as the volume remained constant and hence all the heat supplied has been used to raise the temperature of the gas. See Fig. 20. If H represents the heat added then $H = C_v (T_2 - T_1)$ or

$C_v = \dfrac{H}{(T_2 - T_1)}$, where C_v = specific heat at constant volume = B.t.u. required to raise 1 lb. of the gas 1° F.

TABLE 8

THERMAL PROPERTIES OF GASES

Name of Gas	Chem. Symbol	Mol. Weight $O_2 = 32$	Density Lb. per Cu. Ft. 32° F. & 1 Atmos.	Gas Constant R	$n = \frac{C_p}{C_v}$	Specific Heat	
						C_p	C_v
1	2	3	4	5	6	7	8
Air		28.95	0.0807	53.34	1.40	0.240	0.171
Acetylene	C_2H_2	26.02	.0725	59.34	1.23	.350	.270
Ammonia* Superheated	NH_3	17.06	.0476	90.50	1.31	.532	.389
Argon	A	39.9	.1112	38.70	1.66	.124	.075
Carbon Dioxide*	CO_2	44.0	.1227	35.09	1.31	.210	.160
Carbon Monoxide	CO	28.0	.0780	55.14	1.41	.243	.172
Ethylene*	C_2H_4	28.02	.0780	55.08	1.22	.400	.329
Helium	He	4.0	.0112	386.0	1.66	1.250	.750
Hydrogen	H_2	2.016	.00562	765.36	1.40	3.420	2.440
Methane	CH_4	16.03	.0447	96.31	1.32	.593	.450
Nitric Oxide	NO	30.04	.0838	51.40	1.40	.231	.165
Nitrogen	N_2	28.06	.0783	54.99	1.40	.247	.176
Oxygen	O_2	32.0	.0892	48.25	1.40	.217	.155
Steam*	H_2O	18.016		85.72	1.23	.461	.351
Sulphur Dioxide*	SO_2	64.06	.1786	24.19	1.25	.154	.123

* Properties of these gases vary greatly with the temperature and pressure.

The value of C_p can also be found in a somewhat similar manner if we assume we have 1 lb. of gas in a cylinder fitted with a frictionless piston which is 1 sq. ft. in area. Initial condition is P_1, V_1, and T_1, where P_1 is the constant weight of the piston. Now add heat and change the

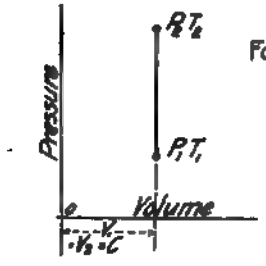

FIG. 20.

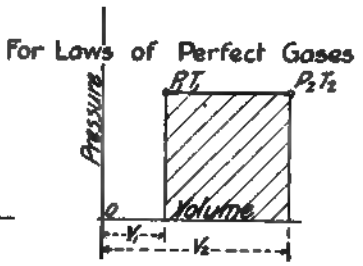

FIG. 21.

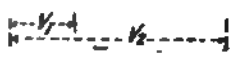

FIG. 22.

volume and temperature to V_2 and T_2, but $P_2 = P_1$. In this case we have performed external work by raising the piston, as well as increased the temperature of the gas. The work done is equal to $P_1 (V_2 - V_1)$ and its heat equivalent is found by dividing by 778. See Fig. 21.

If H represents the heat added then $H = C_v (T_2 - T_1) + \dfrac{P_1 (V_2 - V_1)}{778}$ = heat to change temperature + work done.

But if C_p = specific heat at constant pressure then $C_p (T_2 - T_1) = C_v (T_2 - T_1) + \dfrac{P_2 V_2 - P_1 V_1}{778}$ since $P_1 = P_2$. Also $P_2 V_2 = R T_2$ and $P_1 V_1 = R T_1$ so that $C_p (T_2 - T_1) =$

$C_v (T_2 - T_1) + \frac{R (T_2 - T_1)}{778}$ or $C_p = C_v + \frac{R}{778}$ for the gas in question. From this relation it will be seen that the specific heat at constant pressure is always greater than that at constant volume. See Table 8 for values of specific heats.

Expansion and Compression of Perfect Gases. The heat required to change the volume of a gas, the relation between the pressure and volume being expressed by some law, such as $P\ V^n = K$ (a constant) is found in the following manner. Referring to Fig. 22, it is apparent $P_1\ V_1^n = K$ and $P_2\ V_2^n = K$ from which

$\left(\frac{P_1}{P_2}\right) = \left(\frac{V_2}{V_1}\right)^n$ or $n = \frac{log\ P_1 - log\ P_2}{log\ V_2 - log\ V_1}$, so that K can be readily found.

Now the total heat required will be that necessary to change the temperature $C_v\ (T_2 - T_1)$ and do the external work W represented by the area $a\ b\ c\ d$.

This area *abcd* is equal to the summation of the elementary areas $P\,d\,V = \int_{v_1}^{v_2} P\,d\,V$, but $P = \frac{K}{V^n}$ so that $W = \int_{v_1}^{v_2} \frac{K\,d\,V}{V^n} = \frac{K}{n-1}\left[\frac{-1}{V^{(n-1)}}\right] = \frac{K}{n-1}\left[\frac{1}{V_1^{n-1}} - \frac{1}{V_2^{n-1}}\right]$. Now substitute the value of $K = P_1\ V^n_1 = P_2\ V^n_2$ in the last expression and we have $W = \frac{1}{n-1}$ $[P_1\ V_1 - P_2\ V_2]$ ft.-lb. or $W = \frac{1}{n-1}[R\ T_1 - R\ T_2] = \frac{R}{1-n}[T_2 - T_1]$ and expressed in heat units $= \frac{R}{778\ (1-n)}[T_2 - T_1]$. Hence the heat required is $H = \left[C_v + \frac{R}{778\ (1-n)}\right](T_2 - T_1)$.

Value of the exponent n. If expansion or contraction takes place without loss or gain of heat the change is said to be *adiabatic*. In this case no heat is added and hence $H = 0 = \left(C_v + \frac{R}{778\ (1-n)}\right)(T_2 - T_1)$. But as already stated $(C_p - C_v) = \frac{R}{778}$ and by substitution $C_v + \frac{C_p - C_v}{1-n} = 0$, or $C_v - n\ C_v + C_p - C_v = 0$. From which $n = \frac{C_p}{C_v}$ and hence the value of the exponent for adiabatic compression or expansion of a gas is equal to the ratio of the specific heats.

If we compress a gas adiabatically *the work of compression expressed in heat units is equal to the heat required to change the temperature.* As already stated $W = \frac{1}{n-1}(P_1\ V_1 - P_2\ V_2)$, the work of compression in ft.-lb. But for an adiabatic change $H = 0 = C_v\ (T_2 - T_1) + W\ \frac{1}{778}$ from which it appears that $\frac{W}{778} = C_v\ (T_1 - T_2)$.

Furthermore when a gas is expanded adiabatically the work performed by the gas expressed in heat units is equal to the heat abstracted in lowering its temperature.

The relation between pressure, volume and temperature, for adiabatic compression or expansion, can be expressed as follows, the value of n being $\frac{C_p}{C_v}$, and the initial and final states being P_1, V_1, T_1, and P_2, V_2, T_2. The characteristic equation of a perfect gas where M is 1 lb. can be stated as $T = \frac{P\ V}{R}$, and hence $\frac{T_1}{T_2} = \frac{P_1\ V_1}{P_2\ V_2} = \left(\frac{P_1}{P_2}\right) \times \left(\frac{V_1}{V_2}\right)$. Also, we have since

$P_1 V_1^n = P_2 V_2^n = K$ that $\frac{P_1}{P_2} = \left(\frac{V_2}{V_1}\right)^n$ and therefore $\frac{T_1}{T_2} = \left(\frac{V_2}{V_1}\right)^{n-1}$ and $\frac{V_2}{V_1} = \left(\frac{P_1}{P_2}\right)^{\frac{1}{n}}$ and $\frac{T_1}{T_2} = \left(\frac{P_1}{P_2}\right)^{\frac{n-1}{n}}$.

Those last three equations may be readily solved by the use of a table of logarithms.

Measurement of Air Flow. There are several methods employed for measuring the quantity of air delivered by a fan, blower or air compressor. The two methods most commonly employed in this connection are (1) by means of a circular orifice and (2) by the Pitot tube. The method employing the Pitot tube is fully described under the chapter on " Hot Blast Heating."

The Orifice Method. The discharge from the compressor or fan is piped to a gauging box similar in construction to the one shown in Fig. 23. The opposite end of the box is provided

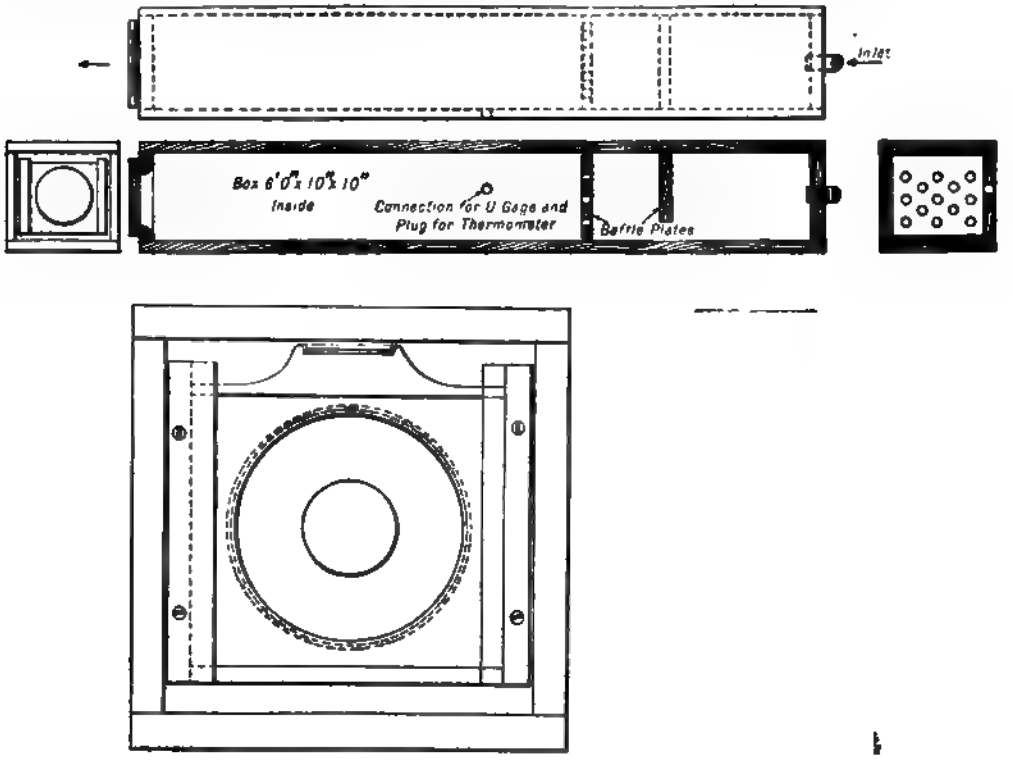

FIG. 23. DETAILS OF GAUGING BOX AND ORIFICE.

with a circular orifice as shown, discharging directly into the air. The static pressure existing within the box is measured by means of a U tube, which indicates the difference in pressure in inches of water between the two sides of the orifice. The temperature of the air passing through the gauging box is also recorded as well as the barometric pressure of the air. The discharge from the orifice must be free and unobstructed, so that the pressure on the discharge side will always be that of the atmosphere.

The *weight of air* passing the orifice per second is then readily determined by substituting in the following equation. The coefficient C to be used in this equation has been determined

by *R. J. Durley*, and may be taken from the curves in Fig. 24 for various sizes of orifices and differences in head. A complete discussion of this method of measuring air will be found in

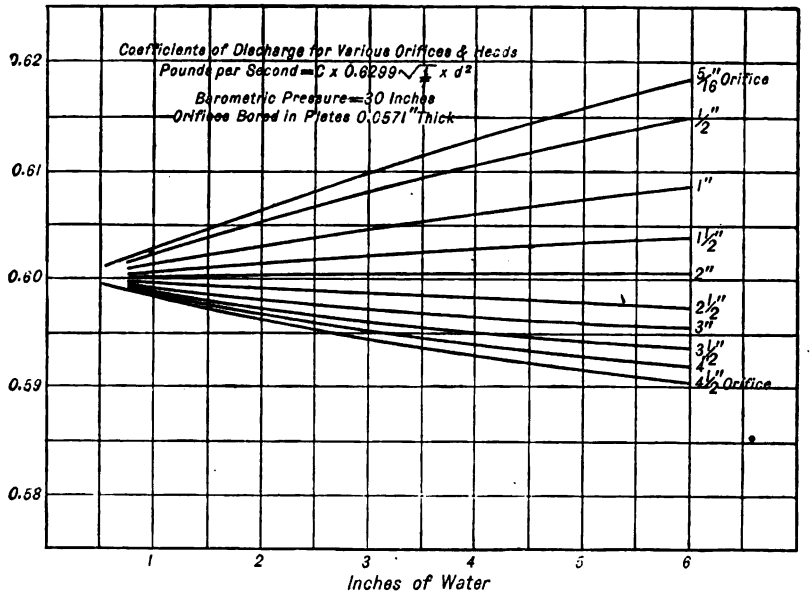

FIG. 24. COEFFICIENTS OF DISCHARGE FOR VARIOUS ORIFICES AND HEADS.

Vol. 27 of the "Transactions of the A. S. M. E." under "Air Flowing into Atmosphere through Circular Orifices."

$$W = 0.01369 \times C + d^2 \sqrt{\frac{i\,P}{T}}, \text{ in which}$$

W = weight of air flowing in pounds per sec.
C = a coefficient depending on values of d and i (see chart, Fig. 24).
d = diameter of orifice in inches.
i = difference in pressure in inches of water between the two sides of the orifice.
T = absolute temperature of the air passing the orifice = $460° + t°$.
t = degrees Fahrenheit in gauging box.
P = pressure in pounds per sq. ft. of the atmosphere based on barometer reading.

The above formula may be used for any atmospheric pressure, but for 30" barometric pressure the formula reduces to:

$$W = 0.6299\ C\ d^2 \sqrt{\frac{i}{T}}.$$

Flow of Air through Pipes and Ducts. The same general formula as used for the flow of water may be applied, with sufficient accuracy, for air flowing under *low pressures* as in ventilating ducts, flues and chimneys.

The flow of air under low pressures is fully discussed under the Chapter on "Hot Blast Heating." *

* Volume I.

TABLE 9

LOSS OF PRESSURE CAUSED BY FRICTION OF COMPRESSED AIR IN PIPES

Equivalent Volume in Cubic Feet Free Air per Minute Passing Through Pipe	Size of Pipe																	
	1″	1¼″	1½″	2″	2½″	3″	3½″	4″	5″	6″	7″	8″	9″	10″	12″	14″	16″	18″	20″
	$P_1^2 - P_2^2$ = Difference of squares of initial and final absolute pressure, per 100 feet of pipe																		
50	125	40.9	16.5	3.9															
75	281.2	92.2	37.0	8.8															
100	500.0	164.0	65.8	15.6	5.1														
150	1125	368.6	148.1	35.2	11.5	4.6													
200	2000	655.4	263.4	62.5	20.5	8.2	3.8	1.9											
250	3125	1024	411.5	97.7	32.0	12.9	5.9	3.1											
300	4500	1475	592.6	140.5	46.1	18.5	8.6	4.4											
400	8000	2621	1053	250	81.9	32.9	15.2	7.8	2.6										
500	12500	4096	1646	390.6	128	51.4	23.8	12.2	4.0										
600	18000	5898	2370	562.5	184.7	74.1	34.3	17.6	5.8	2.3									
800		10486	4214	1000	327.7	131.7	60.9	31.3	10.2	4.1									
1000		16380	6584	1562	512.0	205.8	95.2	48.8	16.0	6.4	3.0								
1500		36860	14815	3516	1152	463.0	214.2	109.9	36.0	14.5	6.7								
2000			26339	6250	2048	823.0	380.8	195.3	64.0	25.7	11.9	6.1							
3000			59260	14050	4608	1852	856.8	439.5	144.0	57.9	26.8	13.7	7.6						
4000				25000	8192	3292	1523	781.2	256.0	102.9	47.6	24.4	13.6	8.0					
5000				39060	12800	5144	2380	1221	400.0	160.7	74.4	38.2	21.2	12.5	5.0				
6000				56250	18470	7407	3427	1758	576.0	231.5	107.1	54.9	30.5	18.0	7.2				
8000					32770	13170	6093	3125	1024	411.5	190.4	97.7	54.2	32.0	12.9	5.9			
10000					51200	20580	9520	4883	1600	640.0	297.5	152.6	84.7	50.0	20.1	9.3	4.8		
15000						46300	21420	10990	3600	1447	669.4	343.3	190.5	112.5	45.2	20.4	10.7	6.0	
20000						82300	38080	19530	6400	2572	1190	610.4	338.7	200.0	80.4	37.2	19.1	10.6	6.25
25000							59500	30520	10000	4019	1859	953.7	529.2	312.5	125.6	58.1	29.8	16.5	9.8
30000								43950	14400	5987	2677	1373	762.1	450	180.8	83.7	42.9	23.8	14.1
35000								59810	19600	7877	3644	1869	1037	612.5	246.2	113.9	58.4	32.4	19.1
40000								78120	25600	10288	4760	2441	1355	800.0	321.5	148.7	76.3	42.3	25.0
50000									40000	16070	7437	3815	2117	1250	502.4	232.4	119.2	66.2	39.1
60000									57600	23150	10710	5493	3048	1800	723.4	334.7	172.1	95.3	56.3
80000									102400	41150	10940	9766	5419	3200	1286	595.0	305.2	169.4	100
100000									160000	64000	29750	15260	8468	5000	2009	929.6	476.8	264.4	156.3

TABLE 10

PRESSURES AND SQUARES OF PRESSURES

Gage Pressure	Absolute Pressure	Square of Absolute Pressure	Gage Pressure	Absolute Pressure
0	14.7	216	...	..
2	16.7	279	...	.
4	18.7	350	...	
6	20.7	428	..	... .
8	22.7	515	..	..
10	24.7	610	86	70 7
12	26.7	713	58	72 7
14	28.7	824	[illegible]	71 7
16	30.7	942	62	76 7
18	32.7	1069	64	78 7
20	34.7	1204	66	80 7
22	36.7	1347	68	82 7
24	38.7	1498	70	84 7
26	40.7	1656	[illegible]	86 7
28	42.7	1823	74	88 7
30	44 7	1998	76	90 7
32	46.7	2180	78	92 7
34	48.7	2372	80	94.7
36	50.7	2570	82	96 7
38	52.7	2777	84	98 7
40	54.7	2992	86	100 7
42	56.7	3215	88	102.7
44	58.7	3446	90	104.7
46	60.7	3684	92	106.7
48	[illegible]	3931	94	108 7
50	64.7	4186	96	110.7
52	66.7	4449	98	112 7
54	68.7	4720	100	114.7

15156	230	244 7	58860	1000	1014.7	1029660

Flow of Compressed Air in Pipes. The variation of density with variation of pressure due to the elasticity of air makes a determination of the friction losses accompanying its passage through pipes a more complicated matter than the calculation for water-friction losses. Water being of practically constant density under all ordinary pressures, its rate of flow through a pipe of uniform diameter will be uniform throughout the length of that pipe, in spite of the decreasing pressure accompanying its progress. The friction losses through a unit distance—say 100 feet—in any part of the pipe line will therefore be the same as the loss through an equal distance in any other part of the pipe; or, in other words, the losses are directly proportional to the length of straight pipe. Air, on the other hand, enters a pipe at a certain pressure and velocity; as it advances through the pipe a certain loss of pressure occurs in overcoming frictional resistance; this loss of pressure is, however, accompanied by an increase of volume, and a corresponding increase in velocity of flow. This variation in velocity of flow throughout the length of the line results in a variation in frictional resistance, and the loss of pressure in a unit distance is the same at no two points in the pipe.

Table 9 is based on the formula of *J. E. Johnson, Jr.*, published in the "American Machinist," July 27, 1899:

$$P_1^2 - P_2^2 = \frac{0.0006\ V^2\ L}{D^5};$$

in which P_1 = absolute initial air pressure, lb.

P_2 = absolute terminal pressure air, lb.

V = free air equivalent in cubic feet per minute of volume passing through pipe.

L = length of pipe, feet.

D = diameter of pipe, inches.

The "free air equivalent" referred to above is the volume measured at atmospheric pressure.

CHAPTER III

FUELS AND COMBUSTION

FUELS

Classification. Fuels are generally classified as solid, liquid, and gaseous.
Solid fuels are coal, wood, and wastes.
Liquid fuels are petroleum and its products.
Gaseous fuels are natural and artificial gas.

SOLID FUELS—COAL

The Formation of Coal. All coals are of vegetable origin, and are the remains of prehistoric forests. Destructive distillation, due to great pressures and temperatures, has resolved the organic matter into its invariable ultimate constituents, carbon, hydrogen, oxygen, and other substances, in varying proportions. The factors of time, depth of beds, disturbance of beds, and the intrusion of mineral matter resulting from such disturbances have produced the variation in the degree of evolution from vegetable fiber to hard coal. This variation is shown chiefly in the content of carbon, and Table 1 shows the steps of such variation.

The Composition of Coal. The uncombined carbon in coal is known as fixed carbon. Some of the carbon constituent is combined with hydrogen, and this, together with other gaseous substances driven off by the application of heat, forms that portion of the coal known as the volatile matter. The fixed carbon and the volatile matter constitute the combustible. The oxygen and nitrogen contained in the volatile matter are not combustible, but custom has applied this term to that portion of the coal which is dry and free from ash, thus including the oxygen and nitrogen in the combustible.

TABLE 1

APPROXIMATE CHEMICAL CHANGES FROM WOOD FIBER TO ANTHRACITE COAL

Substance	Carbon	Hydrogen	Oxygen
Wood Fiber	52.65	5.25	42.10
Peat	59.57	5.96	34.47
Lignite	66.04	5.27	28.69
Earthy Brown Coal	73.18	5.68	21.14
Bituminous Coal	75.06	5.84	19.10
Semi-Bituminous Coal	89.29	5.05	5.66
Anthracite Coal	91.58	3.96	4.46

Coals may be classified according to the percentages of fixed carbon and volatile matter contained in the combustible. *Wm. Kent* gives the following classification.

TABLE 2

CLASSIFICATION OF COALS

Name of Coal	Percentages of Combustible		B.t.u. per Pound of Combustible
	Fixed Carbon	Volatile Matter	
Anthracite	97.0 to 92.5	3.0 to 7.5	14,600 to 14,800
Semi-Anthracite	92.5 to 87.5	7.5 to 12.5	14,700 to 15,500
Semi-Bituminous	87.5 to 75.0	12.5 to 25.0	15,500 to 16,000
Bituminous, East	75.0 to 60.0	25.0 to 40.0	14,800 to 15,300
" West	65.0 to 50.0	35.0 to 50.0	13,500 to 14,800
Lignite	50.0 and under	50.0 and over	11,000 to 13,500

The non-combustible constituents are the ash and moisture, the former varying from 3 per cent to 30 per cent and the latter from 0.75 to 25 per cent of the total weight, depending on locality where mined and grade. A large percentage of ash is undesirable, as it not only reduces the calorific value of the fuel, but chokes up the air passages in the furnace and through the fuel bed, thus preventing the rapid combustion necessary to high efficiency. If the coal contains an excessive quantity of sulphur, trouble will result from its harmful action on the metal of the boiler where moisture is present, and because it unites with the ash to form a fusible slag or clinker which will choke up the great bars and form a solid mass in which large quantities of unconsumed carbon may be imbedded.

Moisture in coal may be more detrimental than ash in reducing the temperature of a furnace, as it is non-combustible, and absorbs heat both in being evaporated and superheated to the temperature of the furnace gases. In some instances, however, a certain amount of moisture in a bituminous coal produces a mechanical action that assists in the combustion and makes it possible to develop higher capacities than with dry coal.

General Characteristics of Hard and Soft Coals. The former contain fixed or uncombined carbon in large proportion, whereas the latter have an increasing percentage of carbon in combination with hydrogen, or hydrocarbon, which is volatile, and will distill off under high temperature, producing smoke. Hard coal usually contains more ash, especially in the smaller sizes. The distinguishing characteristics of the various coals are given in the following paragraphs as described in "Steam," *Babcock & Wilcox Co.*

Anthracite or Hard Coal. This coal ignites slowly, but when in a state of incandescence its radiant heat is very great. Its flame is very short and of a yellowish blue tinge and it can be burned with practically no smoke. This coal does not swell when burned although it contains from 3 to 7.5 per cent of volatile matter.

True or dry anthracite is characterized by few joints and clefts, and their squareness; great relative hardness and density; high specific gravity, ranging from 1.4 to 1.8, and a semi-metallic luster.

Anthracite is now classed and marketed according to graded sizes and designations as given in Table 3.

TABLE 3

NAMES AND SIZES OF ANTHRACITE OR "HARD" COAL

Names of Sizes	Will Pass Through	Will Not Pass Through
Buckwheat No. 1	½-in. mesh	¼-in. mesh
" No. 2	¼-in. mesh	⅛-in. mesh
or Rice	⅜-in. mesh	½-in. mesh
Pea	1¼-in. mesh	¾-in. mesh
Chestnut, or Nut	1¾-in. mesh	1¼-in. mesh
Stove or Range	2½-in. mesh	1¾-in. mesh
Egg—in the East	4 -in. mesh	2¾-in. mesh
Large Egg—Chicago	2¾-in. mesh	2 -in. mesh
Small Egg—Chicago	4 -in. mesh	2½-in. mesh
Broken, or Grate		

The anthracite coals are, with some unimportant exceptions, confined to five small fields in eastern Pennsylvania.

Semi-Anthracite Coal. This coal kindles more readily, because of its higher content of volatile combustible, and burns more rapidly than anthracite. It has less density, hardness, and metallic luster than anthracite, and the average specific gravity is about 1.4.

This coal is found in the western part of the anthracite field in a few small areas.

Semi-Bituminous Coal. A softer coal than anthracite or semi-anthracite, contains more volatile hydrocarbon, and will kindle more easily and burn more rapidly. It is usually free burning, and, owing to its high calorific value, very desirable for steam-generation purposes.

This coal is found in Pennsylvania, Maryland, Virginia, West Virginia, and Tennessee.

Bituminous Coals. These coals are still softer than those described above and contain still more of the volatile hydrocarbons. The difference between the semi-bituminous and the bituminous coals is an important one, economically. The former have an average heating value per pound of combustible about 6 per cent higher than the latter, and they burn with much less smoke in ordinary furnaces. The distinctive characteristic of the bituminous coals is the omission of yellow flame and smoke when burning. In color they range from pitch black to dark brown, having a resinous luster in the most compact specimens, and a silky luster in such specimens as show traces of vegetable fiber. The specific gravity is ordinarily about 1.3.

Bituminous coals are either of the *caking* or *non-caking* variety. The former, when heated, fuse and swell in size; the latter burn freely, do not fuse, and are commonly known as *free burning* coals. Caking coals are rich in volatile hydrocarbons, and are valuable in gas manufacture.

Bituminous coals *absorb moisture* from the atmosphere. The surface moisture can be removed by ordinary drying, but a portion of the water can be removed only by heating the coal to a temperature of about 250° F.

TABLE 4

NAMES AND SIZES OF BITUMINOUS OR "SOFT" COAL

For "Domestic" soft coals there are no uniform names and sizes, but they are marketed in the various states under about these classes:
"Screenings" usually smallest sizes.
"Duff" goes through ½-inch screen.
"No. 3 Nut" goes through 1¼-in. screen, over ¾-inch screen.
"No. 2 Nut" goes through 2-inch screen, over 1¼-inch screen.
"No. 1 Domestic Nut" goes through 3-inch screen, over 1½- or 2-inch screen.
"No. 4 Washed" goes through ¾-inch screen, over ¼-inch screen.
"No. 3 Washed Chestnut" goes through 1¼-inch screen, over ¾-inch screen.
"No. 2 Washed Stove" goes through 2-inch screen, over 1¼-inch screen.
"No. 1 Washed Egg" goes through 3-inch screen, over 2-inch screen.
"No. 3 Roller Screened Nut" goes through 1½-inch screen, over 1-inch screen.
"No. 2 Roller Screened Nut" goes through 2-inch screen, over 1½-inch screen.
"No. 1 Roller Screened Nut" goes through 3½-inch screen, over 2-inch screen.
"Egg" goes through 6-inch, over 3-inch screen.
"Lump" or "Block" goes through 6-inch screen, or over.
"Run-of-Mine" in fine and large lumps.
Pocahontas Smokeless: generally sized as: "Nut," "Egg," "Lump," and "Mine-Run."

Bituminous coal is far more generally distributed than any of the other coals, being found in the Appalachian field in the states of Pennsylvania, West Virginia, Maryland, Virginia, Ohio, Kentucky, Tennessee, and Alabama; a field nearly 900 miles in length. The eastern interior field includes Michigan, all of Illinois, and parts of Indiana and Kentucky. The western field includes Iowa, Missouri, Kansas, Oklahoma, Arkansas, and Texas. The Rocky Mountain fields include parts of Montana, Wyoming, Colorado, Utah, and New Mexico. The Pacific Coast fields are limited to small areas in California, Oregon, and Washington.

Cannel Coal. This is a variety of bituminous coal, rich in hydrogen and hydrocarbons and is exceedingly valuable as a gas coal. It has a dull, resinous luster and burns with a bright flame without fusing. Cannel coal is seldom used for steam coal, though it is sometimes mixed with semi-bituminous coal where an increased economy at high rates of combustion is desired. The composition of cannel coal is approximately as follows: fixed carbon, 26 to 55 per cent; volatile matter, 42 to 64 per cent; earthy matter, 2 to 14 per cent. Its specific gravity is approximately 1.24.

Names and Sizes of Cannel Coal: For fireplace, "Hand-Picked Lump"; for stoves, "Egg."

Lignite. Organic matter in the earlier stages of its conversion into coal is known as lignite and includes all varieties which are intermediate between peat and coal of the older formation. Its specific gravity is low, being 1.2 to 1.23, and when freshly mined it may contain as high as 50 per cent of moisture. Its appearance varies from a light brown, showing a distinctly woody structure, in the poorer varieties, to a black, with a pitchy luster resembling hard coal, in the best varieties. It is non-caking and burns with a bright but slightly smoky flame with moderate heat. It is easily broken, will not stand much handling in transportation, and if exposed to the weather will rapidly disintegrate, which will increase the difficulty of burning it.

Its composition varies over wide limits. The ash may run as low as 1 per cent and as high as 50 per cent. Its high content of moisture and the large quantity of air necessary for its combustion cause large stack losses. It is distinctly *a low-grade fuel*, and is used almost entirely in the districts where mined, because of its cheapness.

Lignites resemble the brown coals of Europe and are found in the western states of Wyoming, New Mexico, Arizona, Utah, Montana, North Dakota, Nevada, California, Oregon, and Washington. Many of the fields given as those containing bituminous coals in the western states also contain true lignite. Lignite is also found in the eastern part of Texas and in Oklahoma.

Peat. This is organic matter in the first stages of its conversion into coal and is found in bogs and similar places. Its *moisture* content when cut is extremely high, averaging 75 to 80 per cent. It is unsuitable for fuel until dried, and even then will contain as much as 30 per cent moisture. Its ash content when dry varies from 3 to 12 per cent. In this country, though large deposits of peat have been found, it has not as yet been found practicable to utilize it for steam-generating purposes in competition with coal. In some European countries, however, the peat industry is common.

Pressed Fuels. In this class are those fuels composed of the dust of some suitable combustible, pressed and cemented together by a substance possessing binding, and in most cases, inflammable properties. Such fuels, known as *briquettes*, are extensively used in foreign countries and consist of carbon or soft coal, too small to be burned in the ordinary way, mixed usually with pitch or coal tar. Much experimenting has been done in this country in briquetting fuels, the government having taken an active interest in the question, but as yet this class of fuel has not come into common use, as the cost and difficulty of manufacture and handling have made it impossible to place it in the market at a price to compete successfully with coal.

Coke. This is a porous product, consisting almost entirely of carbon, remaining after certain manufacturing processes have distilled off the hydrocarbon gases of the fuel used. It is produced (1) from gas coal distilled in gas retorts; (2) from gas or ordinary bituminous coals burned in special furnaces called coke ovens; and (3) from petroleum by carrying the distillation of the residuum to a red heat.

Coke is a *smokeless* fuel. It readily *absorbs moisture* from the atmosphere and if not kept under cover its moisture content may be as much as 20 per cent of its own weight.

Gas-house coke is generally softer and more porous than oven coke, ignites more readily, and requires less draft for its combustion.

Names and Sizes of Domestic By-Product Coke: "Egg," 3-in. to 2½-in. "Large Stove," 2½-in. to 2-in. "Small Stove," 2-in. to 1½-in. "Nut," 1½-in. to ¾-in. "Pea," ¾-in. to ½-in.

The *heat values* of coke range from 12,500 B.t.u. per 1 lb. to 13,500 B.t.u., depending on the ash content, which may vary from 5 to 10 per cent.

Coal Analysis. The *analysis of a coal* should be ascertained if possible. The actual composition of any coal is determined by an ultimate chemical analysis, which can only be made by an experienced chemist.

The *ultimate analysis* of a fuel gives the percentage by weight of the various elements composing same. Such an analysis is usually reported on the dry sample as 100 per cent, and the percentage of moisture in the original sample given separately.

The true analysis is easily obtained by dividing each reported percentage by 100 plus the percentage of H_2O in the original sample as indicated in Table 5.

The *proximate analysis* of a fuel gives the percentage by weight of the fixed carbon, volatile matter, moisture, and ash.

The *moisture* is found by heating a finely pulverized sample (through a 100-mesh sieve) for one hour in a drying oven at a temperature of 240° to 280° F. The loss in weight in this time is due to moisture.

The sample is then heated to a red heat for several hours in a closed crucible to expel the *volatile matter* (gases). Weighings are made at intervals and no air is allowed to come in contact with sample until a constant minimum weight is reached.

TABLE 5

TYPICAL ULTIMATE ANALYSIS

Constituent	Chemist's Report (Based on Dry Fuel)	True Analysis (Fuel as Received)
Carbon	76.91%	72.52%
Hydrogen	5.07	4.78
Oxygen	8.65	8.156
Nitrogen	1.16	1.09
Sulphur	1.21	1.14
Ash	7.00	6.60
	100.00	
Moisture	6.06	5.714
	106.06%	100.00%

Finally the sample is heated to a white heat and the *fixed carbon* allowed to combine with the oxygen of the air, forming carbon dioxide gas (CO_2).

The residue remaining is *ash* or *incombustible*, and if a careful record of weighings has been

FIG. 1. MAHLER-BOMB CALORIMETER.

made the loss of weight for each step represents successively moisture, volatile matter, fixed carbon, and the final residue, the ash.

See Table 6 for results of proximate analyses on Anthracite and Semi-Anthracites.

Heat Value of a Fuel. The *heat of combustion or calorific value of a fuel* is the number of B.t.u. evolved when 1 lb. of the fuel is completely burned in air or oxygen.

A fuel *calorimeter* is used to determine the heat generated by the combustion of a known weight of the fuel, and this heat reduced to a pound basis. In the case of a solid or liquid fuel a *bomb calorimeter* (Fig. 1) is employed, and the standard apparatus in use at the present time is essentially the same as that devised by *M. Pierre Mahler*.

In such an apparatus the fuel is completely burned, and the heat generated by the combustion is absorbed by water, the amount of heat being calculated from the increase in the temperature of the water. A calorimeter which has been accepted as the best for such work is one in which the fuel is burned in a steel bomb filled with compressed oxygen. The function of the oxygen, which is ordinarily under a pressure of about 25 atmospheres, is to cause the rapid and complete combustion of the fuel sample. The fuel is ignited by means of an electric current, allowance being made for the heat produced by such current, and by the burning of the fuse wire.

The apparatus consists of: A water jacket, *A*, which maintains constant conditions outside of the calorimeter proper, and thus makes possible a more accurate computation of radiation losses.

The porcelain-lined steel bomb, *B*, in which the combustion of the fuel takes place in compressed oxygen.

The platinum pan, *C*, for holding the fuel.

The calorimeter proper, *D*, surrounding the bomb and containing a definite weighed amount of water.

An electrode, *E*, connecting with the fuse wire, *F*, for igniting the fuel placed in the pan, *C*.

A support, *G*, for a water agitator.

A thermometer, *I*, for temperature determination of the water in the calorimeter. The thermometer is best supported by a stand independent of the calorimeter, so that it may not be moved by tremors in the parts of the calorimeter, which would render the making of readings difficult. To insure accuracy, readings should be made through a telescope or eyeglass.

A spring and screw device for revolving the agitator.

A lever, *L*, by the movement of which the agitator is revolved.

A pressure gage, *M*, for noting the pressure of the oxygen admitted to the bomb. Between 20 and 25 atmospheres are ordinarily employed.

An oxygen tank, *O*.

TABLE 6

COMPOSITION AND HEAT VALUES OF ANTHRACITE COALS

Locality	Fixed Carbon	Volatile	Moisture	Ash	Sulphur	B.t.u. per Lb. of Dry Coal
Anthracite						
Pennsylvania	78.60	.....	....	14.80	0.40	.....
Buckwheat	81.32	3.84	3.88	10.96	0.67	12,200
Wilkesbarre	76.94	6.42	1.34	15.30	....	11,801
Scranton	79.23	3.73	3.33	13.70	....	12,149
Scranton	84.46	5.37	0.97	9.20	....	12,294
Cross Creek	89.19	1.96	3.62	5.23	....	13,723
Lehigh Valley	75.20	7.36	1.44	16.00	....	12,423
Lykens Valley	76.94	6.21	....	.....	....	15,300
Lykens Valley	81.00	5.00	....	.....	....	15,300
Wharton	86.40	3.08	3.71	6.22	0.58	15,000
Buck Mt	82.66	3.95	3.04	9.88	0.46	15,070
Beaver Meadow	88.94	2.38	1.50	7.11	0.01	.....
Lackawanna	87.74	3.91	2.12	6.35	0.12	.....
Rhode Island	85.00	....	....	7.00	0.90	.....
Arkansas	74.49	14.73	1.52	9.26	....	13,217
Semi-Anthracite						
Pennsylvania, Loyalsock	83.34	8.10	1.30	6.23	1.03	15,400
Bernice	82.52	3.56	0.96	3.27	0.24	15,050
Bernice	89.39	8.56	0.97	9.34	1.04	15,475
Wilkesbarre	88.90	7.68	....	3.49	....	14,199
Lycoming Creek	71.53	13.84	0.67	13.96	0.03	.....
Virginia, Natural Coke	75.08	12.44	1.12	11.38	0.47	.....
Arkansas	74.06	14.98	1.35	9.66	....	.....
Indian Territory	73.21	13.65	5.11	8.03	1.18	13,662
Maryland, Easby	83.60	16.40	....	.....	....	11,207

A battery or batteries, *P*, the current from which heats the fuse wire used to ignite the fuel.

This or a similar calorimeter may be used in the determination of the heat of combustion of solid or liquid fuels. Whatever the fuel to be tested, too much importance cannot be given to

the securing of an average sample. Where coal is to be tested, tests should be made from a portion of the dried and pulverized laboratory sample, the methods of obtaining which have been described. In considering the methods of calorimeter determination, the remarks applied to coal are equally applicable to any solid fuel, and such changes in methods as are necessary for liquid fuels will be self-evident from the same description.

A considerably simpler form of apparatus has been perfected by *Professor S. W. Parr*, which depends upon the oxidizing effect of sodium peroxide to "burn" the fuel. The results are not as accurate as those obtained with the *Mahler* apparatus, but serve for many classes of commercial work.

Heat values of typical American coals are given in Tables 6 and 7 as determined by the Mahler-bomb calorimeter.

TABLE 7

HEAT VALUES OF BITUMINOUS COALS

From selected free-burning and caking soft fuels taken from *U. S. Geological Survey* Bulletin No. 332, and *U. S. Bureau of Mines* Bulletin No. 23

State	Test No.	Kind of Fuel	County	B.t.u. per Lb. Dry Coal
Alabama	375	Soft—caking	Bibb	13,671
Alabama	484	Soft—free burning	Jefferson	14,447
Arkansas	293	Soft—caking	Sebastian	13,705
Arkansas	308	Semi-anthracite—caking	Johnson	14,125
Arkansas	340	Lignite	Quachita	9,549
Georgia	481	Soft—free burning	Chattooga	12,865
Illinois	448	Soft—free burning	Williamson	12,920
Illinois	511	Soft briquettes	St. Clair	13,271
Illinois	509	Soft—caking	Saline	13,621
Indiana	428	Soft—free burning	Greene	13,099
Indiana	435	Soft—caking	Pike	13,545
Indiana	464	Soft briquettes	Parke	11,930
Indian Territory	437	Soft—free burning	.....	13,932
Indian Territory	449	Semi-anthracite	.....	14,682
Kansas	311	Soft—free burning	Linn	12,343
Kentucky	434	Soft—free burning	Union	14,026
Maryland	490	Soft—free burning	Allegany	14,515
Maryland	518	Soft briquettes	Allegany	14,717
Missouri	319	Soft—caking	Randolph	11,747
Montana	477	Lignite—free burning	Carbon	11,628
New Mexico	392	Soft—caking	Colfax	13,059
New Mexico	387	Soft—free burning	Colfax	12,721
Ohio	483	Soft—free burning	Belmont	13,381
Pennsylvania	473	Soft—caking	Indiana	14,240
Pennsylvania	499	Soft—free burning	Cambria	14,119
Pennsylvania	514	Soft briquettes	Westmoreland	14,382
Tennessee	409	Soft briquettes	Claiborne	14,092
Tennessee	368	Soft—free burning	Campbell	14,008
Tennessee	363	Soft—caking	Grundy	13,257
Texas	291	Lignite—free burning	Wood	11,181
Utah	404	Soft—free burning	Summit	12,586
Virginia	482	Anthracite—free burning	Montgomery	12,679
Virginia	507	Soft—caking	Tazewell	14,177
Washington	290	Subbit—free burning	King	11,772
Washington	359	Soft—free burning	Kittitas	12,996
West Virginia	305	Soft—free burning	Marion	13,964
West Virginia	439	Soft—caking	Kanawha	13,995
Wyoming	399	Soft—free burning	Carbon	12,222
Wyoming	400	Subbit—free burning	Unita	12,488

NOTE.—The above values were obtained at the *St. Louis Testing Plant* from 139 samples of coal. The heating values of the various coals were established by "actually burning one gram of the air-dried coal in oxygen in a Mahler-bomb calorimeter." These values in B.t.u. give the theoretical maximum thermal value of soft coals.

High and Low Heat Value of Fuels. For any fuel containing hydrogen the calorific value as found by the calorimeter is higher than can be realized under most working conditions existing in boiler practice by an amount equal to the latent heat of the water formed by combustion. This heat would reappear if the vapor was condensed, but in ordinary practice the vapor passes away uncondensed. This fact gives rise to a distinction in heat values between the so-called "higher" and "lower" calorific values. The higher value, *i.e.*, the one determined by the

calorimeter, is the proper scientific unit, is the value which should be used in boiler testing work, and is the one recommended by the *American Society of Mechanical Engineers*.

TABLE 8

HEAT VALUES OF ILLINOIS COALS

Field* Designation	Geological Seam Number	Name of Field	Moisture, Percent	Ash in Dry Coal, Percent	B.T.U. per Pound	
					Moist Coal	Dry Coal
A	1	Rock Island	11.57	6.27		13,473
B	2	Wilmington	15.34	5 87		13,867
B	2	Northern	14.86	10.08		12,983
F	5	Springfield	12.66	12 31		12,583
D	5	Peoria and Fulton	14.67	15.10		12,166
N	5	Saline	5.90	8 98		13,197
E	6	Grape Creek	12.76	8.59		13,181
G	6	Virden	14.38	11 69		12,584
H	6	Pana	14.38	11.69		12,584
I	6	Central Illinois	14.38	11 69		12,584
J	6	Centralia	14.38	11.69		12,584
M	6	Big Muddy	14.38	11.69		12,584
K	6	Du Quoin	10.36	13.85		12,236
L	7	Williamson and Franklin	9.85	12 16		12,787

For screenings (slack), increase values of ash about 20 per cent, and decrease heating values about 5 per cent.
* See Fig. 2 (map from "Data").

Per Cent of Fixed Carbon in Combustible

FIG. 3. GRAPHIC REPRESENTATION OF RELATION BETWEEN HEAT VALUE PER POUND OF COMBUSTIBLE AND FIXED CARBON IN COMBUSTIBLE AS DEDUCED BY WM. KENT.

There is no absolute measure of the lower heat value, and in view of the wide difference in opinion among physicists as to the deductions to be made from the higher or absolute unit in this determination, the lower value must be considered an artificial unit. The lower value entails the use of an ultimate analysis and involves assumptions that would make the employment of such a unit impracticable for commercial work. The use of the low value may also lead to error and is not recommended for boiler practice.

FIG. 2.

An example of its illogical use may be shown

by the consideration of a boiler operated in connection with a special economizer where the vapor produced by hydrogen is partially condensed by the economizer. If the low value were used in computing the boiler efficiency, it is obvious that the total efficiency of the combined boiler and economizer must be in error through crediting the combination with the heat imparted in condensing the vapor and not charging such heat to the heat value of the coal.

Calorific Value by Formula. The following expression known as *Du Long's* formula for heating value per pound of coal can be used if the ultimate analysis of the fuel is known:

$$F = 14{,}600\ C + 62{,}000\left(H - \frac{O}{8}\right) + 4{,}000\ S,$$

where C, H, O, and S represent the proportionate parts of each element per 1 lb. of fuel, and F denotes the heat value in B.t.u. per pound due to combustion.

This formula does not apply when the fuel contains carbon monoxide, CO, but can be made to apply by adding a term, 10,150 C, in which C is the proportionate part of carbon burned to monoxide.

Example. Application of formula to a coal of ultimate analysis as here given follows:

Analysis (Based on fuel as received)

C	74.79%
H	4.98
O	6.42
N	1.20
S	3.24
H_2O	1.55
Ash	7.82
	100.00%

Then by *Du Long's* formula

$$14{,}600 \times 0.7479 + 62{,}000\left(0.0498 - \frac{0.0642}{8}\right) + 4{,}000 \times 0.0324 = 13{,}650 \text{ B.t.u. per 1 lb. coal.}$$

A bomb-calorimeter test showed 13,480 B.t.u. for this coal. The formula fails to allow for evaporating and superheating the moisture present in the fuel.

Heat Value Based on Fixed Carbon. The relation between the heat value per pound of combustible and the fixed carbon in the combustible is shown by Fig. 3 as deduced by *Wm. Kent.*

Calorific Value of Gaseous Fuels. The *calculation of the calorific value of gaseous fuels* may be made by means of *Du Long's* formula provided the constituent gases are separated into their elementary gases and a term is added to provide for carbon monoxide, or the calculation may be based on the percentages of the constituent gases present and the heat value of each, as given in the following table:

TABLE 9

WEIGHT AND CALORIFIC VALUE OF VARIOUS GASES AT 32° F. AND ATMOSPHERIC PRESSURE WITH THEORETICAL AMOUNT OF AIR REQUIRED FOR COMBUSTION

Gas	Symbol	Cubic Feet of Gas per Pound	B.t.u. per Pound	B.t.u. per Cubic Feet	Cubic Feet of Air Required per Pound of Gas	Cubic Feet of Air Required per Cubic Foot of Gas
Hydrogen	H	177.90	62000	349	428.25	2.41
Carbon monoxide	CO	12.81	4450	347	30.60	2.39
Methane	CH_4	22.37	23550	1053	214.00	9.57
Acetylene	C_2H_2	13.79	21465	1556	164.87	11.93
Olefiant gas	C_2H_4	12.80	21440	1675	183.60	14.33
Ethane	C_2H_6	11.94	22230	1862	199.88	16.74

Example. Assume a natural gas, the analysis of which in percentages by volume is oxygen = 0.40, carbon monoxide = 0.95, carbon dioxide = 0.34, olefiant gas (C_2H_4) = 0.66, ethane (C_2H_6) = 3.55, marsh gas (CH_4) = 72.15, and hydrogen = 21.95. All but the oxygen and the carbon dioxide are combustibles, and the heat value per cubic foot will be:

From	CO	= 0.0095 × 347	=	3.22
	C_2H_4	= 0.0066 × 1675	=	11.05
	C_2H_6	= 0.0355 × 1862	=	65.99
	CH_4	= 0.7215 × 1053	=	757.58
	H	= 0.2195 × 349	=	75.95
B.t.u. per cu. ft.			=	913.79

The net air required for combustion of one cubic foot of the gas will be:

CO	= 0.0095 ×	2.39	= 0.02
C_2H_4	= 0.0066 ×	14.33	= 0.09
C_2H_6	= 0.0355 ×	16.72	= 0.59
CH_4	= 0.7215 ×	9.54	= 6.88
H	= 0.2195 ×	2.39	= 0.52
Total net air per cu. ft.			= 8.10

LIQUID FUELS—OIL

Petroleum. The following distinguishing characteristics of petroleum have been taken from "Steam," *Babcock & Wilcox Co.:*

"Petroleum is practically the only liquid fuel sufficiently abundant and cheap to be used for the generation of steam. It possesses many advantages over coal and is extensively used in many localities.

"There are three kinds of petroleum in use, namely, those yielding on distillation: 1st, paraffin; 2nd, asphalt; 3rd, olefine. To the first group belong the oils of the Appalachian Range and the Middle West of the United States. These are a dark brown in color with a greenish tinge. Upon their distillation such a variety of valuable light oils are obtained that their use as fuel is prohibitive because of price.

"To the second group belong the oils found in Texas and California. These vary in color from a reddish brown to a jet black and are used very largely as fuel.

"The third group comprises the oils from Russia, which, like the second, are used largely for fuel purposes.

"The light and easily ignited constituents of petroleum, such as naphtha, gasoline, and kerosene, are oftentimes driven off by a partial distillation, these products being of greater value for other purposes than for use as fuel. This partial distillation does not decrease the value of petroleum as a fuel; in fact, the residuum known in trade as *fuel oil* has a slightly higher calorific value than petroleum and because of its higher flash point, it may be more safely handled. Statements made with reference to petroleum apply as well to fuel oil.

"In general, crude oil consists of carbon and hydrogen, though it also contains varying quantities of moisture, sulphur, nitrogen, arsenic, phosphorus, and silt. The moisture contained may vary from less than 1 to over 30 per cent, depending upon the care taken to separate the water from the oil in pumping from the well. As in any fuel, this moisture affects the available heat of the oil, and in contracting for the purchase of fuel of this nature it is well to limit the percentage of moisture it may contain. A large portion of any contained moisture can be separated by settling and for this reason sufficient storage capacity should be supplied to provide time for such action."

The *calorific values of petroleum* range from 18,000 to 22,000 B.t.u. per pound, and the percentage composition and other data are given in Table 10. The *flash point* of crude oil is the temperature at which it begins to give off inflammable gases. This temperature varies greatly for different oils, as shown in the table.

The *fire point* is the temperature at which these gases are liberated in sufficient quantity to burn continuously.

TABLE 10

COMPOSITION AND CALORIFIC VALUE OF VARIOUS OILS

Kind of Oil	Per Cent Carbon	Per Cent Hydrogen	Per Cent Sulphur	Per Cent Oxygen	Specific Gravity	Deg. Flash Point	B.t.u. per Pound	Authority
California†	85.04	11 52	2.45	0.99*	.....	...	17871	B. & W. Co.
California	81.52	11 51	0.55	6.92*	.....	220	18667	U. S. N.‡
Texas	87.15	12.23	0.32	....	0.906	370	19838	U. S. N.
Texas	87.29	12 32	0.43	....	0.910	375	19659	U. S. N.
Ohio	83.4	14.7	0.6	1.3	....	...	19580	.....
Pennsylvania	84.9	13.7	....	1.4	0.886	...	19210	Booth
West Virginia	84.3	14.1	....	1.6	0.841	...	21240	.....
Mexico	....	.....	....	....	0.921	162	18840	B. & W. Co.
Russia	....	.....	....	....	.....	...	.....	.....
Caucasus	86.6	12.3	....	1.10	0.933	...	20133	.....
Java	87.1	12.0	....	0 9	0.923	...	21163	.....
Austria	....	....	....	....	.....	...	.....	.....
Galicia	83.2	12.1	5.7	....	0.870	...	18416	.....
Italy, Parma	84.0	13.4	1.8	....	0.786	...	.....	.....
Borneo	85.7	11.0	....	3.31	.....	...	19240	Orde

* Includes N. † Per cent moisture = 1.40. ‡ Liquid Fuel Board.

The *comparative value of petroleum and coal as fuel* may be summed up to the advantage of the liquid fuel as follows: The cost of handling is much lower, both in delivery and in burning same, while for equal heat value much less storage space is required, and this space may be at a distance from the boilers. Higher efficiencies are obtainable, since the combustion is more

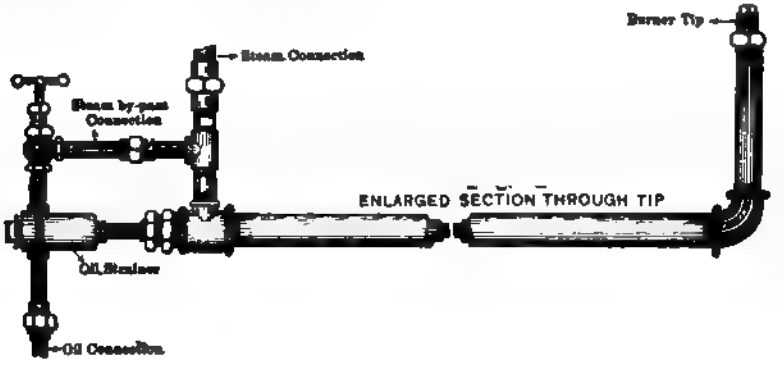

FIG. 4. PEABODY OIL BURNER.

perfect, less excess air is required, temperatures are more constant, and since smoke is largely eliminated, the heating surfaces are correspondingly clean.

The intensity of the fire can be instantly regulated to suit the load requirements, and there is no deterioration from loss of heat value by disintegration due to storage.

The *disadvantage of the liquid fuel* arises from the fact that the oil must have a reasonably high flash point to reduce the danger of explosion, and city ordinances may, in certain cases make its use practically prohibitive. Owing to the high temperatures of the oil flame the boiler upkeep cost may be increased.

The comparative evaporative power of coal and oil is given in Table 11

TABLE 11

EVAPORATION OF WATER FROM COAL AND OIL

Taken from the "U. S. Geological Report on Petroleum" for 1900

Designation of Coal NOTE.—One ton coal = 2,000 lb. One barrel oil = 42 gals. or 336 lb. One gallon oil = 8 lb.	Pounds of Water Evaporated from and at 212° per Pound of Combustible in the Coal	Barrels of Petroleum Required to do same Amount of Evaporation as 1 Ton of Coal Petroleum 18° to 40° Baumé
Pittsburg lump and nut, Pennsylvania	10.0	4.0
Pittsburg nut and slack, Pennsylvania	8.0	3.2
Anthracite, Pennsylvania	9.8	3.9
Indiana Block	9.5	3.8
Georges Creek lump, Maryland	10.0	4.0
New River, West Virginia	9.7	3.8
Pocahontas lump, West Virginia	10.5	4.2
Cardiff lump, Wales	10.0	4.0
Cape Breton, Canada	9.2	3.7
Nanaimo, British Columbia	7.3	2.9
Co-operative, British Columbia	8.9	3.6
Greta, Washington	7.6	3.0
Carbon Hill, Washington	7.6	3.0

Under favorable conditions 1 pound of oil will evaporate from 14 to 16 pounds of water from and at 212°; 1 pound of coal will evaporate from 7 to 10 pounds of water from and at 212°; 1 pound of natural gas will evaporate from 18 to 20 pounds of water from and at 212°.

Oil Burning. The burning of petroleum fuel or oil can only be accomplished in steam-boiler practice by the use of suitable burners, which must atomize the oil so thoroughly that each particle will be brought into contact with the minimum quantity of air necessary for its complete combustion before the gases come in contact with any heating surfaces. The furnace must be of highly refractory material, the radiant heat from which will assist in the combustion. No localization of the heat must occur at the heating surfaces or trouble will result from overheating and blistering.

The *burners* may be classified under three general types: 1st, *spray burners*, in which the oil is atomized by steam or compressed air; 2nd, *vapor burners*, in which the oil is converted into vapor and then passed into the furnace; 3rd, *mechanical burners*, in which the oil is atomized by submitting it to high pressure and passing it through a small orifice.

The *Peabody Burner* (Fig. 4) is of the latter type. These mechanical burners have been in general use only a short time in this country, and the round-flame burner has proved more satisfactory than the flat-flame burner of this type.

The *efficiency of oil burning* with boilers of 500 horsepower may run as high as 83 per cent gross or 81 per cent net after deducting 2 per cent for steam used by burner. The conditions of average practice are such that efficiencies ranging from 5 to 10 per cent less than the above are about the best that may be expected.

GASEOUS FUELS

The gaseous fuels in most common use are blast furnace gas, natural gas, and by-product coke-oven gas.

Blast Furnace Gas. This is a by-product from the blast furnace of the iron industry; the composition of a typical sample from a *Bessemer Furnace* is as follows:

$$CO_2 = 10.0\%,\ CO = 26.2,\ H = 3.1,\ CH_4 = 0.2,\ N = 60.5.$$

With the exception of the small amount of carbon in combination with hydrogen as methane, and a very small percentage of free hydrogen, ordinarily less than 0.1 per cent, the calorific value

of blast furnace gas is due to the CO content which when united with sufficient oxygen as used under a boiler, finally burns to CO_2. The heat value of such gas will vary in most cases from 85 to 100 B.t.u. per cubic foot under standard conditions. In modern practice, where the blast is heated by hot blast stoves, approximately 15 per cent of the total amount of gas is used for this purpose, leaving 85 per cent of the total for use under the boilers or in gas engines, that is, approximately 8500 pounds of gas per ton of pig iron produced. In a modern blast furnace plant, the gas serves ordinarily as the only fuel required.

Natural Gas. This gas has a limited use but is, of course, confined to restricted areas. The best results are secured by using a large number of small burners to which the gas is supplied at a pressure of about 8 ounces. The calculations for amount of gas required to give a certain heating effect should in all cases be based on volume reduced to standard conditions of temperature and pressure, namely, 32°F., and 14.7 lb. pressure per sq. in.

The variation in composition and heating value of natural gas is shown in the following table:

TABLE 12

TYPICAL ANALYSIS (BY VOLUME) AND CALORIFIC VALUES OF NATURAL GAS FROM VARIOUS LOCALITIES

Locality of Well	H	CH_4	CO	CO_2	N	O	Heavy-Hydro-Carbons	H_2S	B.t.u. per Cu. Ft. Calculated*
Anderson, Ind.	1.86	93.07	0.73	0.26	3.02	0.42	0.47	0.15	1017
Findlay, O.	1.64	93.35	0.41	0.25	3.41	0.39	0.35	0.20	1011
St. Ive, Pa.	6.10	75.54	Trace	0.34	.....	....	18.12	....	1117
Pittsburgh, Pa.	9.64	57.85	1.00	.....	23.41	2.10	6.00	....	748
Pittsburgh, Pa.	20.02	72.18	1.00	0.80	.....	1.10	4.30	....	917

* B.t.u. calculated, using percentages of constituent gases, and separate heat values.

By-product Coke-Oven Gas. This is also known as *artificial gas, or illuminating gas*, and is a product of the destructive distillation of coal in a distilling or by-product coke oven. In this class of apparatus the gases, instead of being burned at the point of their origin, as in a beehive or retort coke oven, are taken from the oven through an uptake pipe, cooled, and yield as by-products: tar, ammonia, and illuminating and fuel gas. A certain portion of the gas product is burned in the ovens and the remainder used or sold for illuminating or fuel purposes, the methods of utilizing the gas varying with plant operation and locality.

Table 13 gives the analyses and heat value of certain samples of by-product coke-oven gas utilized for fuel purposes.

This gas is nearer to natural gas in its heat value than is blast furnace gas, and, in general, the remarks as to the proper methods of burning natural gas and the features to be followed in furnace design hold as well for by-product coke-oven gas.

TABLE 13

TYPICAL ANALYSIS OF BY-PRODUCT COKE-OVEN GAS

Sample No.	CO_2	O	CO	CH_4	H	N	B.t.u. per Cu. Ft.
1.	0.75	Trace	6.0	28.15	53.0	12.1	505
2.	2.00	Trace	3.2	18.80	57.2	18.0	399
3.	3.20	0.4	6.3	29.60	41.6	16.1	551
4.	0.80	1.6	4.9	28.40	54.2	10.1	460

The essential difference in burning the two fuels is the pressure under which it reaches the gas burner. Where this is ordinarily from 4 to 8 ounces in the case of natural gas, it is approxi-

mately 4 inches of water in the case of by-product coke-oven gas. This necessitates the use of larger gas openings in the burners for the latter class of fuel than for the former.

By-product coke-oven gas comes to the burners saturated with moisture, and provision should be made for the blowing out of water of condensation.

COMBUSTION

Combustion of Fuel. Combustion as used in steam engineering signifies a rapid chemical combination between oxygen, and the carbon, hydrogen and sulphur composing the various fuels. This combination takes place usually at high temperature with the evolution of light and heat.

The substance combining with the oxygen is known as the *combustible*, and if it is completely burned or oxidized the combustion is *perfect*, that is, no more oxygen can be taken up by the products of the reaction.

The combustion is *imperfect* or incomplete when carbon burns to form carbon monoxide, CO, instead of the dioxide, CO_2, since the former may be further burned to form carbon dioxide if the necessary oxygen is supplied.

The temperature at which the reaction begins to take place is known as the *kindling temperature* and is different for each combustible. The following values are from *Stromeyer:*

TABLE 14

KINDLING TEMPERATURES

Fuel	Temp. F.	Fuel	Temp. F.
Lignite dust	300° F.	Coke	Red Heat
Dried peat	435	Anthracite	Red Heat 750°F.
Sulphur	470	Carbon monoxide	Red Heat 1211
Anthracite dust	570	Hydrogen	1030–1290
Coal	600		

Combustion takes place only between hot gases and oxygen, hence all combustibles are practically gaseous at the instant of combustion.

The characteristics of these gases and atmospheric air must be definitely known before combustion problems can be solved, and such data will be found in the following tables:

TABLE 15

DENSITY OF GASES AT 32° F. AND ATMOSPHERIC PRESSURE 29.92 INS.
(ADAPTED FROM SMITHSONIAN TABLES)

Gas	Chemical Symbol	Specific Gravity, Air = 1	Weight of One Cubic Foot, Pounds	Volume of One Pound, Cubic Feet	Relative Density, Hydrogen = 1	
					Exact	Appr.
Oxygen	O	1.053	0.08922	11.208	15.87	16
Nitrogen	N	0.9673	.07829	12.773	13.92	14
Hydrogen	H	0.0696	.005621	177.90	1.00	1
Carbon dioxide	CO_2	1.5291	.12269	8.151	21.83	22
Carbon monoxide	CO	0.9672	.07807	12.809	13.89	14
Methane	CH_4	0.5576	.04470	22.371	7.95	8
Ethane	C_2H_6	1.075	.08379	11.935	14.91	15
Acetylene	C_2H_2	0.920	.07254	13.785	12.91	13
Sulphur dioxide	SO_2	2.2639	.17862	5.598	31.96	32
Air	.....	1.0000	.08071	12.390	.....	....

Combustion Reactions. The constituent elements of a gas combine with oxygen in perfectly definite proportions by weight and volume, forming definite *combustion products.* These reactions as well as the proportions in which the gases combine have been tabulated for use in computation work and are given herewith.

TABLE 16

OXYGEN AND AIR REQUIRED FOR COMBUSTION

By Weight

At 32° F. and 29.92 Inches

1	2	3	4	5	6	7	8	9	10
Oxidizable Substance or Combustible	Chemical Symbol	Atomic or Combining Wgt.	Chemical Reaction	Product of Combustion	Oxygen per Pound of Column 1 in Pounds	Nitrogen per Pound of Column 1 = 3.32*×O in Pounds	Air per Pound of Column 1 = 4.32†×O in Pounds	Gaseous Product per Pound of Col. 1 = 1 + Col. 8 in Lbs.	Heat Value per Pound of Col. 1 in B.t.u.
Carbon....	C	12	$C+2O=CO_2$	Carbon dioxide...	2.667	8.85	11.52	12.52	14600
Carbon....	C	12	$C+O=CO$	Carbon monoxide.	1.333	4.43	5.76	6.76	4450
Carbon monoxide	CO	28	$CO+O=CO_2$	Carbon dioxide...	0.571	1.90	2.47	3.47	10150‡
Hydrogen..	H	1	$2H+O=H_2O$	Water.....	8.0	26.56	34.56	35.56	62000
Methane...	CH_4	16	$CH_4+4O=CO_2+2H_2O$	Carbon dioxide and water.....	4.0	13.28	17.28	18.28	23550
Sulphur...	S	32	$S+2O=SO_2$	Sulphur dioxide ..	1.0	3.32	4.32	5.32	4050

* Ratio by weight of N to O in air.
† 4.32 pounds of air contain one pound of O.
‡ Per pound of C in the CO.

TABLE 16 (*Continued*)

By Volume

1	2	11	12	13	14	15	16	17	18
Oxidizable Substance or Combustible	Chemical Symbol	Volumes of Column 1 Entering Combination Volume	Volumes of Oxygen Combining with Column 11 Volume	Volumes Product Formed Volume	Volume per Lb. of Column 1 in Gaseous Form, Cu. Ft.	Volume of Oxygen per Pound of Column 1, Cu. Ft.	Volume of Products of Combustion per Pound of Column 1, Cu. Ft.	Volume of Nitrogen per Pound of Column 1 = 3.752* × Column 15, Cu. Ft.	Volume of Gas per Pound of Column 1 = Column 16 + Column 17, Cu. Ft.
Carbon.....	C	1	2	$2CO_2$	14.95	29.89	29.89	112.98	142.87
Carbon.....	C	1	1	2CO	14.95	14.95	29.89	56.49	86.38
Carbon monoxide	CO	2	1	$2CO_2$	12.80	6.40	12.80	24.20	37.00
Hydrogen.....	H	2	1	$2H_2O$	179.32	89.66	179.32	339.09	518.41
Methane.....	CH_4	1	2	$1CO_2+2H_2O$	22.41	44.83	67.34	169.55	236.89
Sulphur.....	S	1	2	$2SO_2$	5.60	11.21	11.21	42.39	53.60

* Ratio by volume of N to O in air.

Babcock & Wilcox Co.

It will be seen from this table that a pound of carbon will unite with 2⅔ pounds of oxygen to form carbon dioxide, and will evolve 14,600 B.t.u. As an intermediate step, a pound of carbon may unite with 1⅓ pounds of oxygen to form carbon monoxide and evolve 4450 B.t.u., but in its further conversion to CO_2 it would unite with an additional 1⅓ times its weight of oxygen and evolve the remaining 10,150 B.t.u.

When a pound of CO burns to CO_2, however, only 4350 B.t.u. are evolved, since the pound of CO contains but $^3/_7$ lb. carbon.

Air Required for Combustion. It has already been shown that each combustible element in the fuel will unite with a definite amount of oxygen. With the ultimate analysis of the fuel known, the theoretical amount of air required for combustion may be readily calculated.

Example. Let the ultimate analysis be as follows:

	Per Cent.
Carbon	74.79
Hydrogen	4.98
Oxygen	6.42
Nitrogen	1.20
Sulphur	3.24
Water	1.55
Ash	7.82
	100.00

When complete combustion takes place, as already pointed out, the carbon in the fuel unites with a definite amount of oxygen to form CO_2. The hydrogen, either in a free or combined state, will unite with oxygen to form water vapor, H_2O. Not all of the hydrogen shown in a fuel analysis, however, is available for the production of heat, as a portion of it is already united with the oxygen shown by the analysis in the form of water, H_2O. Since the atomic weights and H and O are respectively 1 and 16, the weight of the combined hydrogen will be $\frac{1}{8}$ of the weight of the oxygen, and the hydrogen available for combustion will be $H - \frac{1}{8}O$. In complete combustion of the sulphur, sulphur dioxide, SO_2, is formed.

Expressed numerically, the theoretical amount of air required for the above analysis is as follows: (See Column 6, Table 15.)

$0.7479\ C \times 2\frac{2}{3}$	$= 1.9944\ O$
$(0.0498 - 0.0642/8)\ H \times 8$	$= 0.3262\ O$
$0.0324\ S \times 1$	$= 0.0324\ O$
Total required	$2.3610\ O$

One pound of oxygen is contained in 4.32 lb. of air.

The total air needed per pound of coal, therefore, will be $2.3610 \times 4.32 = 10.200$ lb.

The weight of combustible per pound of fuel is $0.7479 + 0.0418^* + 0.0324 + 0.012 = 0.83$ pounds, and the air theoretically required per pound of combustible is $10.200/0.83 = 12.3$ lb.

The above is equivalent to computing the theoretical amount of air required per pound of fuel by the formula: (See Column 8, Table 16.)

$$\text{Weight per pound} = 11.53\ C + 34.56\ (H - O/8) + 4.32\ S$$

where, C, H, O and S are proportional parts by weight of carbon, hydrogen, oxygen, and sulphur by ultimate analysis.

Theoretical and Actual Amount of Air Required. The calculations for air required presuppose that each and every particle of oxygen can be brought into intimate contact with the combustible. Practically this is impossible, due to the large amount of inert nitrogen present, variations in the fuel bed, and interference of clinker and ash, which cannot be removed as soon as formed. When burning oil and gas, however, some of these difficulties are eliminated, and the actual can more nearly approach the theoretical amount of air as calculated and given in Table 17.

TABLE 17

THEORETICAL AMOUNT OF AIR REQUIRED

Fuel	Composition by Weight			Lbs. of Air per Lb. of Fuel
	% C	% H	% O	
Wood charcoal	93.0	....	....	11.16
Peat charcoal	80.0	....	....	9.6
Coke	94.0	....	....	10.8
Anthracite coal	91.5	3.5	2.6	11.7
Bituminous coal, dry	87.0	5.0	4.0	11.6
Lignite	70.0	5.0	20.0	8.9
Peat, dry	58.0	6.0	31.0	7.68
Wood, dry	50.0	6.0	43.5	6.00
Mineral oil	85.0	13.0	1.0	14.30

It is therefore necessary to provide for an *excess of air* when burning coal under either natural or forced draft, amounting to approximately 50 to 100 per cent of the net calculated amount, or about 18 to 24 lb. per pound of coal.

Less air results in *imperfect combustion* and smoke, while an excess cools the fire and setting and carries away large quantities of heat in the flue gases.

*Available hydrogen.

FLUE GAS ANALYSIS

Composition of Flue Gas. A flue gas analysis gives the proportion by volume of the principal constituent gases produced by the combustion of any fuel. The gases usually determined in such an analysis are carbon dioxide, CO_2, oxygen, O, and carbon monoxide, CO, while the residue or volume remaining after these gases are removed is taken as nitrogen, N.

By reference to Table 16 it will be seen that when oxygen and carbon combine the volume of the carbon dioxide gas formed is exactly equal to the volume of oxygen entering into the reaction, provided all volumes are measured at the same temperature and pressure. It, therefore, follows that if just sufficient air is provided to burn exactly one pound of pure carbon, the gas resulting will contain 20.91 per cent CO_2 and 79.09 per cent N, the oxygen having all entered into combination with the carbon, and the new gas resulting has simply taken the place of the original 20.91 per cent O. Now if 50 per cent excess air is supplied only ⅔ of the original oxygen volume will be replaced by CO_2 and the flue gas analysis will show 13.91 per cent CO_2, 7.0 per cent O and 79.09 per cent N. Finally, if 100 per cent excess air is supplied only ½ of the original oxygen volume will be replaced by CO_2 and the flue gas will contain 10.45 per cent CO_2, 10.45 per cent O, and 79.09 N. In each case the *oxygen* or *sum of the oxygen and carbon dioxide percentage is constant* or 20.91 per cent, while the *nitrogen percentage* is likewise *constant* at 79.09 per cent provided pure carbon only is burned completely.

If *carbon monoxide is produced* it will occupy twice the volume of the oxygen entering into its composition, hence the volume of the flue gas resulting will be greater (at the same temperature and pressure) than that of the air supplied by ½ of the per cent of CO present. One volume C + one volume O = two volumes CO.

If *hydrogen is present* in the fuel it will increase the apparent percentage of nitrogen in the flue gas, due to the fact that the water vapor formed by its combustion will condense at the temperature of the analysis, while the nitrogen brought in with the oxygen which combined with the hydrogen will remain as a gas and appear in the analysis.

Actual Air Supplied for Combustion. Likewise *the total* or *actual amount of air* supplied per pound of fuel burned can be expressed as follows, provided the flue gas analysis is known, and the relative densities of the gases are given.

These densities are in the same ratio as the molecular weights, which are as follows: CO_2 = 44, CO = 28, O_2 = 32, N_2 = 28; in which C = 12, O = 16 and N = 14.

In this connection it must be remembered that *equal volumes of all gases* at the same temperature and pressure *contain the same number of molecules*, hence the truth of the above statement.

It will therefore be apparent that if we let N_2, CO_2 and CO represent the percentages by volume from a flue gas analysis, and C_1 the percentage by weight of carbon in the fuel; then the pounds of air per pound of fuel will be expressed as follows:

$$A_a = \frac{28 \times N_2}{12(CO_2 + CO) \times 76.9} \times C_1,$$

where 76.9 = per cent of nitrogen in atmospheric air by weight and A_a = lb. of air supplied per pound of the fuel.

It should be noted that in the above expression all the carbon is supposed to burn and pass up the flue. Since this is never true in practice, it is necessary to correct C_1 by the amount of carbon in the ash. Thus, if the ash in a boiler test amounted to 16 per cent, and an analysis was found to contain 25 per cent of carbon, the percentage of unconsumed carbon would be $16 \times 0.25 = 4$ per cent of the total coal burned. Now if the coal by ultimate analysis contained 80 per cent of carbon, only $80 - 4 = 76$ per cent of the fuel would actually be combustible carbon, hence use 76 per cent for C_1 in the above formula instead of 80 per cent, which is C_1, as reported in the analysis.

Then the *ratio of air actually supplied to that theoretically required* is A_a/A_t as determined above.

Weight of Flue Gas. The *weight of flue gases, W, per pound of carbon* is also easily computed from the flue gas analysis by the following formula,

$$W = \frac{44\ CO_2 + 32\ O_2 + 28(CO + N)}{12\ (CO_2 + CO)},$$

where the symbols CO_2, O_2, CO and N are the percentages by volume of these gases as determined from the flue gas analysis. Also the weight of flue gas per pound of dry coal may be de-

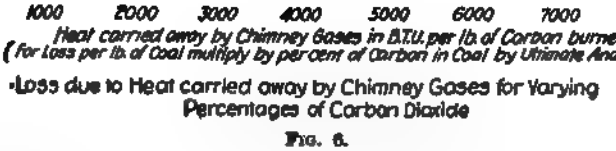

FIG. 6.

termined from this formula by multiplying W by the percentage of carbon C_1 in the coal as found by an ultimate analysis.

Heat Lost in Flue Gas. The *heat lost in the flue gases due to the heat in the gases* is $L = 0.24\ W\ (t_2 - t_1)$ where L = B.t.u. lost per pound of dry coal, W = weight of flue gases per pound of dry coal, t_2 = temperature of flue gases, t_1 = temperature of air, and 0.24 = specific heat of the flue gases. The above loss is given graphically, as shown by Fig. 6, for varying percentages of CO_2 and different flue gas temperatures.

The *heat lost in the flue gases, due to the formation of carbon monoxide* when the carbon is incompletely burned is, in B.t.u. per pound of dry fuel,

$$L_1 = 10{,}150 \times \frac{12\ CO}{12(CO + CO_2)} \times C_1,$$

where 10,150 is the heat value per pound of carbon in the CO, and CO and CO_2 are percentages by volume from the flue gas analysis while C_1 is the proportion by weight of carbon which must be corrected to give the amount burned and passed up the stack as already explained.

Orsat Apparatus. The apparatus most commonly used for flue gas analysis is known as the *Orsat* (Fig. 7), and is described as follows:

"The burette A is graduated in cubic centimeters up to 100, and is surrounded by a water jacket to prevent any change in temperature from affecting the density of the gas being analyzed.

"For accurate work it is advisable to use four pipettes, B, C, D, E, the first containing a solu-

tion of *caustic potash for the absorption of carbon dioxide*, the second an alkaline solution of *pyrogallol for the absorption of oxygen*, and the remaining two an acid solution of *cuprous chloride for absorbing the carbon monoxide*. Each pipette contains a number of glass tubes, to which some of the solution clings, thus facilitating the absorption of the gas. In the pipettes *D* and *E*, copper wire is placed in these tubes to re-energize the solution as it becomes weakened. The rear half of each pipette is fitted with a rubber bag, one of which is shown at *K*, to protect the solution from the action of the air. The solution in each pipette should be drawn up to the mark on the capillary tube.

"The gas is drawn into the burette through the U-tube *H*, which is filled with spun glass, or similar material, to clean the gas. To discharge any air or gas in the apparatus, the cock *G* is opened to the air and the bottle *F* is raised until the water in the burette reaches the 100 cubic-centimeter mark. The cock *G* is then turned so as to close the air opening and allow gas to be drawn through *H*, the bottle *F* being lowered for this purpose. The gas is drawn into the burette to a point below the zero mark, the cock *G* then being opened to the air and the excess gas expelled until the level of the water in *F* and in *A* is at the zero mark. This operation is necessary in order to obtain the zero reading at atmospheric pressure.

"The apparatus should be carefully *tested for leakage* as well as all connections leading thereto. Simple tests can be made, as for example: If after the cock *G* is closed, the bottle *F* is placed on top of the frame for a short time and again brought to the zero mark, and the level of the water in *A* is above the zero mark, a leak is indicated.

FIG. 7. ORSAT APPARATUS.

"Before taking a final sample for analysis, the burette *A* should be filled with gas and emptied once or twice, to make sure that all the apparatus is filled with the new gas. The cock *G* is then closed and the cock *I* in the pipette *B* is opened and the gas driven over into *B* by raising the bottle *F*. The gas is drawn back into *A* by lowering *F* and when the solution in *B* has reached the mark in the capillary tube, the cock *I* is closed and a reading is taken on the burette, the level of the water in the bottle *F* being brought to the same level as the water in *A*. The operation is repeated until a constant reading is obtained, the number of cubic centimeters, absorbed as shown by the reading, being the percentage of CO_2 in the flue gases.

"The gas is then driven over into the pipette *C* and a similar operation is carried out. The difference between the resulting reading and the first reading gives the percentage of oxygen in the flue gases.

"The next operation is to drive the gas into the pipette *D*, the gas being given a final wash in *E*, and then passed into the pipette *C* to neutralize any hydrochloric acid fumes which may have been given off by the cuprous chloride solution, which, especially if it be old, may give off such fumes, thus increasing the volume of the gases and making the reading on the burette less than the true amount.

"The process must be carried out in the order named, as the pyrogallol solution will also absorb carbon dioxide, while the cuprous chloride solution will also absorb oxygen.

"As the pressure of the gases in the flue is less than the atmospheric pressure, they will not of themselves flow through the pipe connecting the flue to the apparatus. The gas may be drawn into the pipe in the way already described for filling the apparatus, but this is a tedious

method. For rapid work a rubber bulb aspirator connected to the air outlet of the cock *G* will enable a new supply of gas to be drawn into the pipe, the apparatus then being filled as already described. Another form of aspirator draws the gas from the flue in a constant stream, thus insuring a fresh supply for each sample.

"The analysis made by the *Orsat* apparatus is *volumetric*. If the *analysis by weight* is required, it can be found from the volumetric analysis as follows:

"Multiply the percentages by volume by either the densities or the molecular weight of each gas, and divide the products by the sum of all the products; the quotients will be the percentages by weight. For most work sufficient accuracy is secured by using the even values of the molecular weights."

Example. An application of the above data when an ultimate analysis of the fuel and a volumetric analysis of the flue gas is known can be made as follows:

Partial ultimate analysis, C = 82.1%, H = 4.25%, O = 2.6%, S = 1.6%, Ash = 6.0%, and B.t.u. per pound of dry Pocahontas coal = 14,500. The flue gas analysis is,

	Per Cent
CO_2	10.7
O	9.0
CO	0.0
N (by difference)	80.3

Determine: The flue gas analysis being given, (1) the amount of air required for perfect combustion, (2) the actual weight of air per pound of fuel, (3) the weight of flue gas per pound of coal, (4) the heat lost in the chimney gases if the temperature of these is 500° F., and (5) the ratio of the air supplied to that theoretically required.

Solution: The theoretical weight of air required for perfect combustion, per pound of fuel, from formula already given under "Air Required for Combustion," will be,

$$W_1 = 11.52 \times 0.821 + 34.56 \left(0.0425 - \frac{0.026}{8}\right) + 4.32 \times 0.016 = 10.88 \text{ lb.}$$

If the amount of carbon which is burned and passes away as flue gas is 80 per cent, which would allow for 2.1 per cent of unburned carbon in terms of the total weight of dry fuel burned, the weight of dry gas per pound of carbon burned will be from formula already given under "Weight of Flue Gas,"

$$W_2 = \frac{44 \times 10.7 + 32 \times 9.0 + 28\ (0 + 80.3)}{12\ (10.7 + 0)} = 23.42 \text{ lb.,}$$

and the weight of flue gas per pound of coal burned will be $0.80 \times 23.42 = 18.74$ lb.

The heat lost in the flue gases per pound of coal burned will be from formula and the value 18.74 just determined:

Loss = $0.24 \times 18.74 \times (500–60) = 1{,}979$ B.t.u.

The percentage of heat lost in the flue gases will be $1{,}979 \times 100/14{,}500 = 13.6$ per cent.

The ratio of air supplied per pound of coal to that theoretically required will be $(18.74 - 1)/10.88 = 1.63$.

The ratio of air supplied per pound of combustible to that required will be,

$$\frac{0.803}{0.803 - 3.782\ (.09 + \frac{1}{2} \times 0)} = 1.73$$

$$\text{since, } \frac{\text{N}}{\text{N} - 3.782\ (\text{O} + \frac{1}{2}\text{ CO})} = \frac{\%\text{ nitrogen in whole amount of air.}}{\%\text{ nitrogen in air actually required.}}$$

NOTE. The value 3.782 is the volumetric ratio of nitrogen to oxygen in the air (Table 16, Column 17). All the uncombined oxygen and ½ of the carbon monoxide represents the oxygen equivalent of unnecessary or excess nitrogen, which in turn represents air.

The ratio based on combustible will be greater than the ratio based on fuel if there is unconsumed carbon in the ash.

Unreliability of CO_2 Readings Taken Alone. It is generally assumed that high CO_2 readings are indicative of good combustion and hence of high efficiency. This is true only in the sense that such high readings do indicate the small amount of excess air that usually accompanies good combustion, and for this reason high CO_2 readings alone are not considered entirely reliable. Wherever an automatic CO_2 recorder is used, it should be checked from time to time and the analysis carried further with a view to ascertaining whether there is CO present. As the percentage of CO_2 in these gases increases, there is a tendency toward the presence of CO, which, of course, cannot be shown by a CO_2 recorder, and which is often difficult to detect with an Orsat apparatus. The greatest care should be taken in preparing the cuprous chloride solution in making analyses and it must be known to be fresh and capable of absorbing CO.

Smokeless Combustion. Smokeless combustion can only be attained with special equipment and most careful firing, and the following methods for its accomplishment are recommended by the *Babcock & Wilcox Co.*, who have had a wide experience in this field:

"The question of smoke and smokelessness in burning fuels has recently become a very important factor in the problem of combustion. Cities and communities throughout the country have passed ordinances relative to the quantities of smoke that may be emitted from a stack, and the failure of operators to live up to the requirements of such ordinances, resulting as it does in fines and annoyance, has brought their attention forcibly to the matter.

"The whole question of smoke and smokelessness is to a large extent a comparative one. There are any number of plants burning a wide variety of fuels in ordinary hand-fired furnaces, in extension furnaces and on automatic stokers that are operating under service conditions, practically without smoke. It is safe to say, however, that *no plant will operate smokelessly under all conditions of service*, nor is there a plant in which the degree of smokelessness does not depend largely upon the intelligence of the operating force.

"When a condition arises in a boiler room requiring the fires to be brought up quickly, the operatives in handling certain types of stokers will use their slice bars freely to break up the green portion of the fire over the bed of partially burned coal. In fact, when a load is suddenly thrown on a station the steam pressure can often be maintained only in this way, and such use of the slice bar will cause smoke with the very best type of stoker. In a certain plant using a highly volatile coal and operating boilers equipped with ordinary hand-fired furnaces, extension hand-fired furnaces and stokers, in which the boilers with the different types of furnaces were on separate stacks, a difference in smoke from the different types of furnaces was apparent at light loads, but when a heavy load was thrown on the plant, all three stacks would smoke to the same extent, and it was impossible to judge which type of furnace was on one or the other of the stacks.

"In *hand-fired furnaces* much can be accomplished by proper firing. A combination of the alternate and spreading methods should be used, the coal being fired evenly, quickly, lightly, and often, and the fires worked as little as possible. Smoke can be diminished by giving the gases a long travel under the action of heated brickwork before they strike the boiler heating surfaces. Air introduced over the fires and the use of heated arches, for mingling the air with the gases distilled from the coal will also diminish smoke. Extension furnaces will undoubtedly lessen smoke where hand-firing is used, due to the increase in length of gas travel, and the fact that this travel is partially under heated brickwork. Where hand-fired grates are immediately under the boiler tubes, and a highly volatile coal is used, if sufficient combustion space is not provided, the volatile gases, which are distilled as soon as the coal is thrown on the fire, strike the tube surfaces and are cooled below the burning point before they are wholly consumed and therefore pass through as smoke. With an extension furnace, these volatile gases are acted upon by the radiant heat from the extension furnace arch, and this heat, together with the added length of travel, causes their more complete combustion before striking the heating surfaces than in the former case.

"Smoke may be diminished by employing a baffle arrangement which gives the gases a fairly long travel under heated brickwork and by introducing air above the fire. In many cases, how-

ever. special furnaces for smoke reduction are installed at the expense of capacity and economy.

"From the standpoint of smokelessness, undoubtedly the best results are obtained with a good stoker, properly operated. As stated above, *the best stoker will cause smoke under certain conditions.* Intelligently handled, however, under ordinary operating conditions, stoker-fired furnaces are much more nearly smokeless than those which are hand-fired, and are, to all intents and purposes, smokeless. In practically all stoker installations there enters the element of time for combustion, the volatile gases as they are distilled being acted upon by ignition or other arches before they strike the heating surfaces. In many instances, too, stokers are installed with an extension beyond the boiler front, which gives an added length of travel, during which, the gases are acted upon by the radiant heat from the ignition or supplementary arches, and here again we see the long travel giving time for the volatile gases to be properly consumed.

"Finally, it must be emphatically borne in mind that the question of smokelessness is largely one of degree, and dependent to an extent much greater than is ordinarily appreciated upon the handling of the fuel and the furnaces by the operators, be these furnaces hand-fired or automatically fired."

CHAPTER IV

BOILERS AND RULES FOR CONSTRUCTION

POWER BOILERS

The term " power boiler," as generally understood, refers to a boiler in which a pressure of approximately 80 lb. per sq. inch or more is employed for supplying steam to various types of prime movers. The term " heating boiler " refers to boilers designed to carry only a low pressure, usually not over 25 lb. per sq. inch working pressure, for supplying steam to low pressure heating or drying systems. A boiler installation involves, among other things, a consideration of the following items: calorific value of the fuel, grate area, draft, and boiler heating surface.

Grate Area. In order to generate a definite weight of steam at a certain pressure (or evaporate a definite weight of water) in a unit of time (lb. per hour) from water at a given temperature requires a fixed amount of heat to be supplied by the combustion of some fuel. That is, a definite number of pounds of fuel must be burned per hour, depending upon the calorific value of the fuel, to supply the heat required. The amount of fuel that is burned on a square foot of grate surface per hour is termed the *rate of combustion* and is limited by the character of the fuel, draft, etc. Therefore, it may be said, with more or less exactness, that for a certain weight of water to be evaporated per hour under certain conditions of pressure, feed-water temperature and calorific value of the fuel to be used, a definite amount of grate area will be required.

Draft. To burn a given weight of fuel of certain character in a unit of time requires a definite amount of air to supply the oxygen necessary to support combustion, as was previously shown to be the case under " Fuels and Combustion." The air is passed under the grate and through the fuel-bed and meets with more or less resistance both in passing through the fuel-bed and later through or around the boiler tubes and flue. It is necessary, then, to supply a motive force to circulate the air required either by a fan, steam jet or chimney. The absolute pressure existing over the fuel-bed must be less than the absolute pressure existing under the grate to cause a flow. The difference between the atmospheric pressure and the pressure existing at any point through the furnace or the flue connecting the boiler with the chimney or stack is termed the "draft" at that particular point. This pressure difference is measured and stated in inches of water. The question of draft is fully treated in the Chapters on " Chimneys for Power Boilers " and " Mechanical Draft."

Boiler Heating Surface. The amount of heat that may be transmitted from the hot gases through a unit area of the steel shell or tubes of a boiler to the water in a unit of time is limited by the temperature difference between the gases and water, and the velocity of the gases over the heating surface.

This difference is limited by the temperature as obtained from the combustion of the fuel and the temperature of the water in contact with the surface. Consequently, a boiler, in order that it may absorb the necessary heat to evaporate a given weight of water in a unit of time, must be supplied with a definite amount of surface, termed " heating surface," in contact with the hot gases.

From the foregoing statements it is evident that the character and calorific value of the fuel, grate area and draft and boiler heating surface are dependent upon one another. The consideration of any boiler installation will, therefore, involve the calculation or assumption of the magnitude of the items mentioned from the data obtained in a laboratory, and from actual tests of existing plants.

Heat Transfer in Boiler Tubes. There have recently been completed, under the direction

of *J. E. Bell*, an extensive and comprehensive set of experiments on "Heat Transfer Rates."* The apparatus used consisted of a 2-in. internal diameter copper pipe, surrounded by 20 individual water jackets each 1 ft. long. The gases were drawn from an illuminating-gas furnace in which temperatures above 2,600 deg. F. could be obtained. The range of gas-flow rate covered was from 4,000 to 14,000 lb. per hr. per sq. ft. of cross-sectional area of passage. The difference in temperature between the gas and metal surface was from 400 to 2,000 deg. F., and the temperature

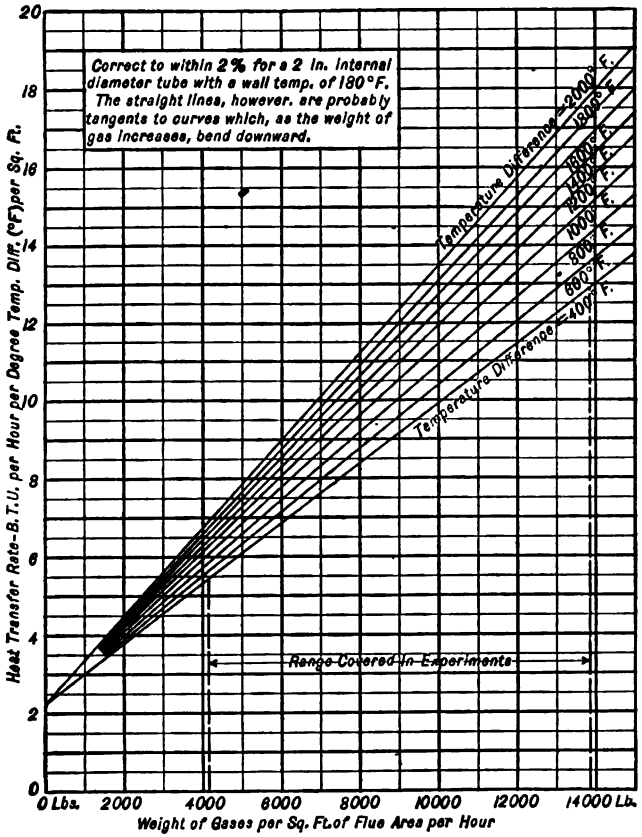

FIG. 1. HEAT TRANSFER IN BOILER TUBES.

of the metal surface varied from 145 to 215 deg. F., the average wall temperature being 180 deg. The variation in specific heat of the gases was taken into account.

The flue gases, after leaving the experimental tube, were cooled in a 2-in. coil 26 ft. long, surrounded by water. The gases leaving the coil were passed through a box, where the dew point was determined. The dew point, together with the entering and exit temperatures of the gas and water through the cooler and the flue-gas analyses taken during the tests, gave the most accurate method of determining gas weights.

The rate of heat transfer may be expressed by the formula,

$$R = A + B\left(\frac{W}{a}\right)$$

*The *Babcock & Wilcox Co.*, Bayonne, N. J.

where

R = the rate of heat transfer; B.t.u. per sq. ft. per hour per degree difference in temperature,
A = a constant,
B = a function of the temperature difference,
$\frac{W}{a}$ = the rate of mass flow per unit area of channel.

The value of A, as determined by these experiments, is 2.20. The value of B varies with changes in the temperature difference from 0.000770 for a temperature difference of 400 deg. F. to 0.001120 for a temperature difference of 2,000 deg. F. These values of B may be readily obtained from the chart for any rate of gas flow and any temperature difference.

Fig. 1 gives in graphic form the results of these experiments.

It is interesting to note that while at high rates of gas flow the temperature difference has an important bearing on the heat-transfer rate, at low weights of gas flow, such as are encountered in boiler practice, the effect of the temperature difference is relatively small.

Relation Between Gas Temperature, Heating Surface Passed Over and Amount of Steam Generated. Fig. 2, reproduced from "Steam," shows the relation of gas temperatures, heating surface passed over and work done by such surface for use in cases where the temperatures approach those found in direct-fired practice, and where the volume of gas available is approximately that with which one horsepower may be developed on 10 square feet of heating surface. The curve assumes what may be considered standard gas passage areas and, further, that there is no heat absorbed by direct radiation from the fire.

Experiments have shown that this curve is very nearly correct for the conditions assumed. Such being the case, its application in waste heat work is clear. Decreasing or increasing the velocity of the gases over the heating surfaces from what might be considered normal direct-fired practice—that is, decreasing or increasing the frictional loss through the boiler—will increase or decrease the amount of heating surface necessary to develop one boiler horsepower. The application of Fig. 2 to such use may best be seen by a consideration of the following case.

Assume the entering gas temperatures to be 1470 degrees and that the gases are cooled to 570 deg. F. From the curve, under what are assumed to be standard conditions, the gases have passed over 19 per cent of the heating surface by the time they have been cooled 1470 degrees. When cooled to 570 degrees, 78 per cent of the heating surface has been passed over. The work done in relation to the standard of the curve is represented by $(1470 - 570) \div (2500 - 500) = 45$ per cent. (These figures may also be read from the curve in terms of the per cent of the work done by different parts of the heating surfaces.) That is, 78 per cent − 19 per cent = 59 per cent of the standard heating surface has done 45 per cent of the standard amount of work. $59 \div 45 = 1.31$, which is the ratio of surface of the assumed case to the standard case of the curve. Expressed differently, there will be required 13.1 square feet of heating surface in the assumed case to develop a horsepower as against 10 square feet in the standard case.

Boiler Horsepower (b.hp.) The commercial rating of a power boiler is stated in terms of boiler horsepower. A boiler horsepower (*A. S. M. E.* standard) is equal to an evaporation of 34.5 pounds of water from and at 212° F. per hour; that is, the boiler having the feed water coming to it at 212° F. must furnish the necessary heat to turn 34.5 pounds of water at this temperature and atmospheric pressure into steam at the same temperature and pressure per hour. In other words: The boiler must supply the latent heat of vaporization or 971.7* B.t.u. to each pound of water to turn it into steam at atmospheric pressure (14.7 lb. per sq. in. absolute) or it must furnish $971.7 \times 34.5 = 33{,}523.7$ B.t.u. per hour to the water per boiler horsepower.

Therefore, 1 boiler horsepower = 33,523.7 B.t.u. per hour.

The horsepower developed by a boiler in operation is determined by first finding the B.t.u.

---

* Marks and Davis steam tables give 970.4 for the latent heat, corresponding to 212° F., in which case 1 b.hp. = 33478.8 B.t.u. per hour.

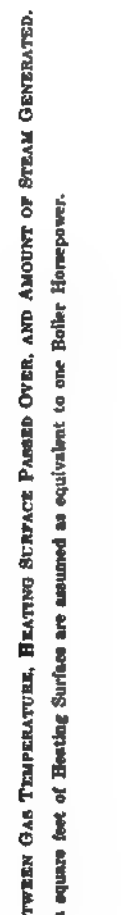

FIG. 2. RELATION BETWEEN GAS TEMPERATURE, HEATING SURFACE PASSED OVER, AND AMOUNT OF STEAM GENERATED.

Ten square feet of Heating Surface are assumed as equivalent to one Boiler Horsepower.

received by the water and steam from the boiler per hour and dividing this quantity by the B.t.u. equivalent of one boiler horsepower.

Steam may exist in the three following states:

1st. Saturated steam with suspended moisture.

2d. Dry saturated steam.

3d. Superheated steam.

Steam with x parts vapor means that each pound of the vapor will carry $(1-x)$ parts of water held in suspension. This water has not received the latent heat necessary to turn it into vapor, and must therefore be figured accordingly.

Let q = heat in the water above 32° F. corresponding to the temperature and pressure at which it was turned into steam.

x = the fractional part of the mixture of vapor and water that is vapor.

r = latent heat of vaporization corresponding to the temperature and pressure.

q_1 = heat of the liquid, above 32° F., of the feed water.

W = total weight of feed water furnished the boiler per hour.

t = temperature of saturated steam corresponding to the pressure.

Total heat, above 32°, per lb. of steam leaving the boiler:

$= q + x\,r$ for wet steam.

$= q + r = H$ for dry saturated steam.

$= H + C_{pm}\,(t_s - t)$ for superheated steam.

The boiler horsepower developed by the boiler will be:

$$\text{b.hp.} = \frac{(q + xr - q_1)\,W}{33{,}523.7} \text{ if steam is wet.}$$

$$= \frac{(H - q_1)\,W}{33{,}523.7} \text{ if steam is dry and saturated.}$$

$$= \frac{[H + C_{pm}\,(t_s - t)]\,W}{33{,}523.7} \text{ if steam is superheated.}$$

t_s = actual temperature of the steam if superheated.

C_{pm} = mean specific heat of superheated steam for the given range of temperature and pressure. See diagram, Chapter on "Water, Steam, and Air."

Equivalent Evaporation. It is customary to refer or reduce the actual evaporation of a boiler to a standard set of conditions in order to make comparisons. This standard is the amount of water that would have been evaporated into dry steam from and at 212° F. for the same heat expenditure.

W = actual weight of feed water per hour per lb. of fuel.

W_1 = equivalent evaporation per hour.

971.7 = latent heat corresponding to a temperature of 212°.

$$W_1 = \frac{(q + x\,r - q_1)\,W}{971.7} \text{ for wet steam.}$$

$$= \frac{(H - q_1)\,W}{971.7} \text{ for dry steam.}$$

$$= \frac{[H + C_{pm}\,(t_s - t)]\,W}{971.7} \text{ for superheated steam.}$$

Factor of Evaporation—(F). The "factor of evaporation" is the ratio of the heat required to generate one pound of steam for the given condition (at the boiler pressure, temperature and

feed-water temperature) to the amount of heat required to generate one pound of dry steam from and at 212° F.

Then the factor of evaporation is:

$$F = \frac{q + x\,r - q_1}{971.7} \text{ for we steam.}$$

$$= \frac{H - q_1}{971.7} \text{ for dry steam.}$$

$$= \frac{H + C_{pm}\,(t_s - t)}{971.7} \text{ for superheated steam.}$$

The equivalent evaporation from and at 212° is:

$$W_1 = F \times W.$$

Boiler Efficiency (ϕ). The term "efficiency," when applied to steam boiler performance, ordinarily refers to the over-all efficiency of the grate, furnace and boiler when solid fuels are used.

It is obvibusly unfair to charge against the boiler the unconsumed fuel that drops through the grate and becomes mixed with the ashes. It is difficult, however, to separate the efficiency of the boiler and furnace from the grate efficiency, and as the user must pay for any such loss it is customary, unless otherwise noted, to state the combined efficiency rather than separate efficiencies.

It is recommended that in asking for guarantees of boiler performance when the term "efficiency" is used that it be clearly defined in the proposal.

When liquid fuels are used.

$$\text{Combined efficiency of boiler, furnace and grate } (\phi) = \frac{\text{Heat absorbed per pound of fuel.}}{\text{Calorific value of one pound of fuel.}}$$

When solid fuels are used.

$$\text{Combined efficiency of boiler, furnace and grate } (\phi) = \frac{\text{Heat absorbed per pound of fuel as fired.}}{\text{Calorific value of one pound of fuel as fired.}}$$

The efficiency of the boiler alone is stated as:

$$\frac{\text{Heat absorbed by the boiler per pound of combustible burned on the grate.}}{\text{Calorific value of one pound of combustible as fired.}}$$

Let C = calorific value of the fuel as fired per lb.
B = weight of fuel per hour, lb.
$W_1 = F\,W$ equivalent evaporation, lb. per hour.

Then the heat absorbed per lb. of fuel consumed per hour is:

$$\frac{F \times W \times 971.7}{B}.$$

Then $$\phi = \frac{F \times W \times 971.7}{B \times C} \text{ or } B = \frac{F \times W \times 971.7}{\phi \times C}.$$

The equivalent evaporation per hour (from and at 212°) per lb. of fuel is:

$$w = \frac{W_1}{B} = \frac{F\,W}{B} = \frac{\phi \times C}{971.7}.$$

The combined efficiency (ϕ) that may be expected from the combination of well-designed and proportioned boilers, furnaces and grates is given in the table of tests accompanying. The results were practically all obtained under test conditions, and the nearness to which actual operations may approach these results will depend largely upon the intelligent supervision given to the plant.

In the general run of plants the all-year round combined efficiency does not exceed 60 per cent. This is the figure usually used in preliminary estimates for small and medium-sized plants. There is practically no difference in the efficiencies of the various types of first class boilers on the market when intelligently handled.

TABLE 1

BOILER TESTS

B. & W. Water Tube Boilers

Rated Capacity B.hp. *	Coal Used	Calorific Value of Coal B.t.u. per Lb.	Method of Firing	Ratio H. S. to Grate Area	Draft, In. Water		Per Cent Capacity	Combined Efficiency per Cent	Grate Surface Square Feet
					In Furnace	At Damper			
119	A.E.	13,454	H.F.	45	0.33	....	84.4	69	26.5
155	A.P.	12,851	H.F.	39	.33	0.43	104.7	69.2	40
218	A.B.	11,104	M.S.	42.2	.65	.56	125.7	72.1	51.6
300	A.B.	11,913	H.F.	35.7	.41	.21	118.7	71.8	84
150	B.L.	12,292	H.F.	55.5	.10	.24	101.8	71.5	27
321	G.C.	14,955	H.F.	61.7	.25	.35	99.3	72.7	52
640	S.	14,381	H.F.	54.2	.44	.58	129.3	73.2	118
300	H.O.	12,435	M.S.	....	.22	.35	130.7	73.4	.....
508	M.	10,576	M.S.	49	.62	1.24	161.5	74.9	103.5
508	C.	13,126	M.S.	56.4	.68	1.15	215.7	71.9	90
300	P.N.S.	13,510	M.S.	56.6	1.64	.64	112	74.6	53
298	A.S.	12,060	H.F.	50	.35	.59	107.2	69.6	59.5

* The heating surface in the above boilers is equal to the rated capacity × 10.

H.F.—Hand fired.
M.S.—Mechanical stoker.
A.E.—Anthracite egg.
A.P.—Anthracite pea.
A.B.—Anthracite buckwheat.
B.L.—Bituminous lump, Ohio.
G.C.—Georges Creek bituminous.
S.—Somerset, Pa., bituminous.
H.O.—Hocking Valley, O., bituminous.
M.—Mascouth, Ill., bituminous.
C.—Cartersville, Ill., bituminous.
P.N.S.—Pittsburg nut and slack bituminous.
A.S.—Arkansas slack bituminous.

Relation Between Efficiency and Capacity. When a boiler is forced beyond its normally rated capacity the efficiency is ordinarily somewhat decreased, although at not a very marked rate up to 50 per cent overloads. This is due primarily to the fact that in order to obtain a higher rate of evaporation the combustion rate must be increased, which in turn generates a large volume of flue gases. A point is soon reached where the heating surface is insufficient to absorb the extra heat generated, the gases leaving the boiler at a higher temperature resulting in a lowering of the efficiency.

The curve Fig. 3—*A* was plotted from the results of a large number of tests run on water tube boilers. The general direction of the curve will be found to hold approximately correct for operating conditions when used as a guide to what may be expected.

Example. A certain coal gives up by perfect combustion, 14,500 B.t.u. per pound (calorific value). Assume a combined efficiency of 60 per cent for the boiler, furnace and grate.

Then if all the heat from the coal was transferred to the water, the equivalent theoretical evaporation from and at 212° F. would be:

$$\frac{14,500}{971.7} = 14.9 \text{ lb. water per lb. of coal.}$$

But since only 60 per cent of the heat in the coal is transferred to the water, the equivalent evaporation will be:

$$\frac{14{,}500 \times 0.60}{971.7} = 8.96 \text{ lb. water per lb. of coal.}$$

Suppose the conditions were not standard, but the steam pressure was 100-lb. gage and the feed-water temperature 60° F., the heat required to raise the temperature of 1 lb. water from 60° F. and to convert into dry steam at 100-lb. pressure will be:

$$H - q_1 = 1190.7 - 28.1 = 1162.6 \text{ B.t.u.}$$

Then $\frac{14{,}500 \times 0.60}{1162.6} = \frac{8700}{1162.6} = 7.5$ lb. water actually evaporated per lb. of coal burned for the assumed conditions of pressure and temperature of feed water.

Fig. 3 will be found convenient for rapidly solving problems relative to boiler performance.

Assumed Feed-Water Temperature for Estimates. It is customary to assume a feed-water temperature of approximately 60° F. when no feed-water heater is to be used, which is an unusual condition; and a temperature of 200° to 210° F. when a feed-water heater is to be installed in a non-condensing plant and approximately 175° F. for a condensing plant. This temperature will depend upon the amount of steam used by the auxiliaries. (See Chapter on "Feed Water Heaters.")

Heating Surface—(H.S.). The heating surface of a boiler is that part of the boiler which has water in contact with the surface on the one side and hot gases on the other side. Superheating surface is that part of the boiler having steam on the one side and hot gases on the other.

Builders' Rating. It was customary for the majority of stationary boiler manufacturers *in the past* to base the commercial horsepower rating of their product on the following allowance of heat surface per b.hp.

TABLE 2

	Sq. Ft. H. S. per B.hp.	Equiv. Evapn. Per Sq. Ft. H. S.
Water Tube Type	10	3.45
Return Tubular Type	12	2.88
Scotch Marine Type	8	4.30

This is known as "builders' rating." It is now the customary practice to rate all types of boilers on a basis of 10 sq. ft. per b.hp.

Engineers are rapidly ceasing to rate boilers in horsepower since there is no definite relation between the rating so expressed and the horsepower of the engine which it is capable of driving. Moreover, there is a tendency to force boilers to evaporate more water per square foot of heating surface. *For these reasons it is preferable to speak of boilers in terms of their heating surface and not in horsepower rating.* In selecting boiler equipment, designing engineers usually determine the rate of evaporation which they can expect per unit heating surface with the fuel, draft and setting which is to be employed. The combined water rate of the steam consumers is then computed and divided by the evaporative rate, which has been chosen to obtain the total heating surface of the boilers which will be required.

Equivalent Evaporation per Square Foot of Heating Surface. The equivalent evaporation (from and at 212°) per sq. ft. of heating surface per hour (W_2) is equal to: The total equivalent evaporation per hour (W_1) divided by the total amount of heating surface, or:

$$W_2 = \frac{W_1}{H.S.}$$

Thus, if a boiler is rated by the builder on a basis of 10 sq. ft. of heating surface per b.hp., the equivalent evaporation required (from and at 212°) per sq. ft. per hour (W_2) is 34.5/10 or 3.45 lb.

A boiler rated as indicated in the preceding table should develop at least 33⅓ per cent more than its rated capacity when hand fired, using a fair grade of coal and with a draft of not less than ½" water available at the boiler damper. The "builders' rating" is simply a statement made by the manufacturer that his product under ordinary operating conditions will easily develop, and with good economy, one boiler horsepower for the amount of heating surface as given. It does not indicate the limit of actual evaporation or boiler horsepower that may be developed. This method of rating was adopted, primarily, for reasons of convenience in selling.

When there is sufficient draft to burn the necessary fuel, water tube boilers will readily develop 200 per cent rating with a good grade of fuel.

D. S. Jacobus states that whether the plant be hot water or steam apparently makes little difference as to the general conditions affecting the boiler capacity required.

Apparently, with eastern coal or coal with low ash content it is possible to operate boilers at 200 per cent overload for a considerable period of time. With coals of a quality as is mined in Illinois and Indiana, 200 per cent of load may be considered as an extreme capacity. With western fuels, such as lignite, 150 per cent of load is probably the extreme which should be considered. With oil-burning furnaces and installations, 300 per cent of load should be considered as the extreme capacity.

TABLE 3

BOILER HEATING SURFACE AND HORSEPOWER FOR RETURN TUBULAR BOILERS

Diameter of Boiler, Inches	Tubes			Heating Surface				Horsepower
	Length, Feet	Diameter, Inches	Number	Tubes	Shell	Rear Head	Total	
54	14	3	54	552	99	8	659	66
54	16	3	54	631	113	8	752	75
54	14	3½	44	526	99	8	633	63
54	16	3½	44	601	113	8	722	72
54	14	4	34	467	99	8	574	57
54	16	4	34	534	113	8	655	65
60	16	3	72	841	125	10	976	98
60	18	3	72	946	141	10	1,097	110
60	16	3½	50	684	125	10	819	82
60	18	3½	50	770	141	10	921	92
60	16	4	46	722	125	9	856	86
60	18	4	46	812	141	9	962	96
66	16	3	94	1,098	138	11	1,247	125
66	18	3	94	1,235	156	11	1,402	140
66	16	3½	70	957	138	11	1,106	110
66	18	3½	70	1,077	156	11	1,244	124
66	16	4	56	878	138	11	1,027	103
66	18	4	56	988	156	11	1,155	115
72	16	3	118	1,378	151	13	1,542	154
72	18	3	118	1,550	170	13	1,733	173
72	20	3	118	1,722	189	13	1,924	192
72	16	3½	94	1,285	161	13	1,449	145
72	18	3½	94	1,446	170	13	1,629	163
72	20	3½	94	1,606	189	13	1,808	181
72	16	4	70	1,098	151	13	1,262	126
72	18	4	70	1,235	170	13	1,418	142
72	20	4	70	1,372	189	13	1,574	157
78	16	3	140	1,635	163	15	1,813	181
78	18	3	140	1,839	184	15	2,038	204
78	20	3	140	2,043	204	15	2,262	226
78	16	3½	108	1,477	163	15	1,655	165
78	18	3½	108	1,662	184	15	1,861	186
78	20	3½	108	1,846	204	15	2,065	206
78	16	4	88	1,380	163	14	1,557	156
78	18	4	88	1,553	184	14	1,751	175
78	20	4	88	1,725	204	14	1,943	194
84	18	3	172	2,260	198	17	2,475	247
84	20	3	172	2,511	220	17	2,748	275
84	18	3½	136	2,092	198	17	2,307	231
84	20	3½	136	2,324	220	17	2,561	256
84	18	4	106	1,871	198	16	2,085	208
84	20	4	106	2,078	220	16	2,314	231

In designing the boiler installation for 200 per cent of load, the extreme capacity, it will probably be found good practice, if not the best practice, to design a boiler to operate most economically at 125 to 150 per cent of load. A condition of this kind requires larger combustion chambers than would be the practice if the boilers were designed to operate most efficiently at a full load. It would also require somewhat larger gas passages and also a larger stoker equipment.

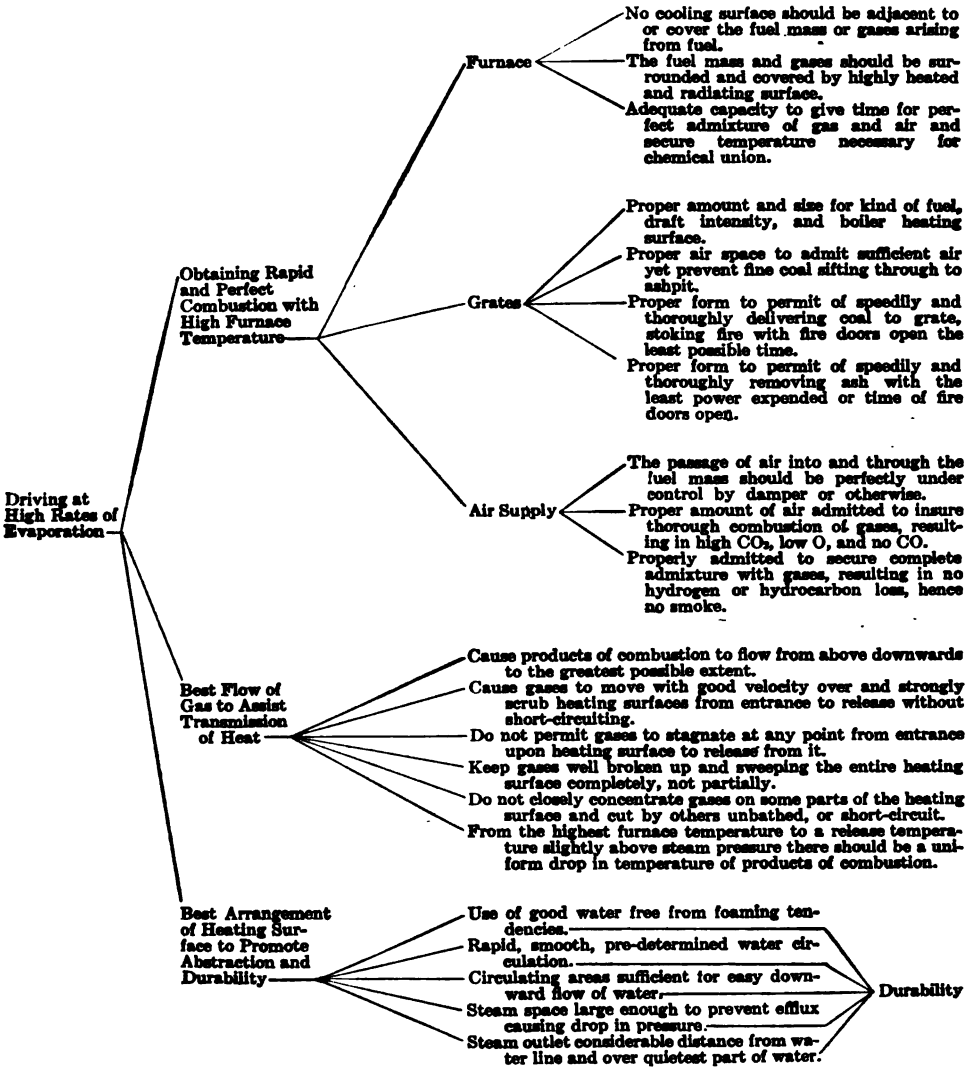

Requisites which Control the Operation of Boilers at High Rates of Evaporation. The above chart was prepared by *E. C. Fisher*, Pres., *Wickes Boiler Co.*, giving in a condensed form the requisites which, in boiler plants, secure and maintain high rates of evaporation.

Heating Surface of Return Tubular Boilers. In order to compare horizontal tubular boilers directly both as to heating surface and horsepower, the *Hartford Steam Boiler Inspection Insurance Company* has prepared the foregoing table. It is figured on the basis of 10 sq. ft. of heating surface per boiler horsepower, the heating surface as calculated including the inside tube area, one-half the area of the cylindrical portion of the shell, and two-thirds of the area of the rear head minus the combined cross-sectional area of the tube.

Grate Surface-(G) and Rate of Combustion-(R). To evaporate a given amount of water, it is necessary to generate a certain amount of heat by the combustion of fuel. The factors controlling the amount of heat generated are:

(a) Character of the fuel.

(b) Intensity of draft.

(c) Amount of grate surface.

The cheapest fuel for the locality should be determined in advance by ascertaining the relative evaporating power of the coals available and their cost delivered to the plant.

Let G = area of grate surface, sq. ft.

W_1 = total equivalent evaporation from and at 212° F.

W = equivalent evaporation per hour per lb. of fuel.

$$= \frac{W_1}{B}.$$

R = rate of combustion, lb. fuel supplied grate per sq. ft. per hour.

$$R = \frac{B}{G}.$$

$$G = \frac{B}{R} = \frac{34.5 \times \text{b.hp.}}{W \times R}.$$

With a good coal low in ash, approximately equal results may be obtained with a large grate surface and light draft or with small grate surface and strong draft, the total amount of coal per hour being the same in both cases. All fuels have, however, a maximum rate of combustion beyond which satisfactory results cannot be obtained regardless of the draft available.

With a coal high in ash, especially if the ashes are easily fusible, tending to choke the grate surfaces, a slow rate of combustion is required, unless shaking or travelling stokers are provided to get rid of the ash as fast as formed.

Types of Grate Bars. (Fig. 4.) The "common grate" is used for both wood and coal, but has been largely superseded by the "tupper or herring-bone grate" which is ordinarily furnished by the boiler manufacturer unless otherwise specified.

The "sawdust grate" is used only for sawdust as produced by sawmills and the "shaving grate" is used for burning shavings as produced by planning mills, sash and door factories.

When bituminous coal is to be used, the front portion of the grate is frequently made solid for a depth of 6 to 12 inches, this portion being termed the "dead plate," the purpose of which is to hold the fuel until the volatile products have been distilled off. As soon as the charge is coked it is pushed back and spread over the grate and a new charge introduced.

The length of grate for burning bituminous coals should not exceed about 6 feet for hand-fired boilers. If the grate has a greater width than 4 feet, two fire doors should be provided.

Rocking Grates. The clinker formed on the grate, when bituminous coal is used, is more readily broken up and removed when a rocking or shaking type of grate is used, and the labor of stoking the fire is very materially reduced. The grate is ordinarily divided into two sections which permits of the live fire being shoved from one side to the other during the cleaning periods.

Fig. 5 shows a common type of rocking grate which is built in multiples of 6 inches in width and length.

Ratio of Heating Surface to Grate Area. The amount of grate surface required for a given condition with coal used as fuel will depend upon the rate of combustion assumed, which in turn is dependent upon the available draft, the quality and size of coal to be burned.

The draft required at the boiler damper to produce various rates of combustion, and the draft between the ash pit and furnace is given by the curves, Fig. 3-*D*. The maximum grate area is limited by the design of the boiler for water tube boilers, manufacturers ordinarily providing for approximately 1 sq. ft. of grate surface for each 45 sq. ft. of heating surface.

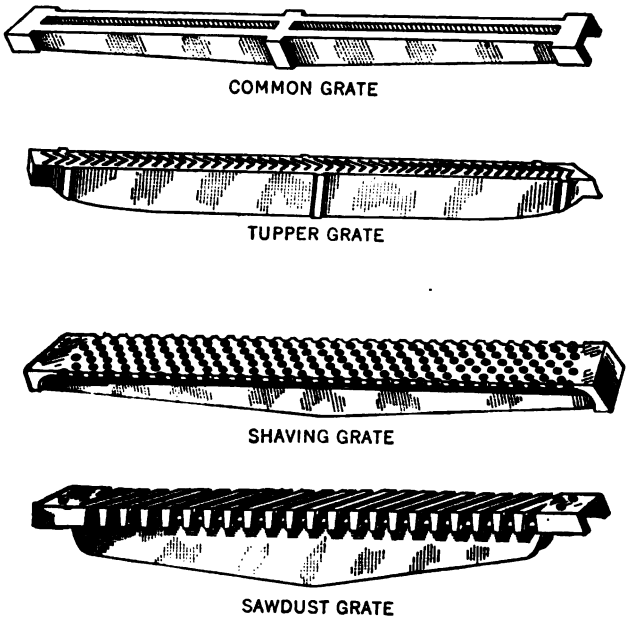

FIG. 4. TYPES OF GRATE BARS.

TABLE 4

AIR SPACES AND THICKNESS OF GRATE BARS

Size and Kind of Coal	Width of Air Spaces, In.	Thickness of Grate Bars, In.
Screenings	¼	⅜
Anthracite:		
Average	½	¾
Buckwheat	3/16	3/16
Pea or nut	½	½
Stove	⅝	½
Egg	5/16	½
Broken	⅞	½
Lump	1	¾
Bituminous, average	⅝	¾
Wood:		
Slabs	¾	¾
Sawdust	¼ to ⅜	⅜
Shavings	½ to ⅝	½

When anthracite buckwheat is to be used a ratio of heating surface to grate area of 1 to 35 or 40 will ordinarily develop the rated capacity of the boiler.

When finer sizes are used or overloads are to be carried forced draft must be employed to insure the desired results.

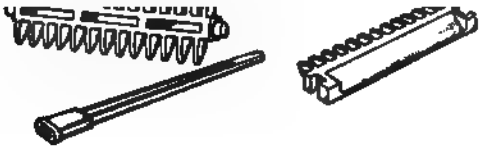

FIG. 5. ROCKING GRATE.

The following table is given by *Gebhardt's* "Steam Power Plant Engineering" as representing current practice in this respect.

TABLE 5

RATIO OF HEATING SURFACE TO GRATE SURFACE IN RECENT BOILER INSTALLATIONS

Nature of Plants	No. of Plants	Type of Boiler	Type of Grate	Height of Chimney	Character of Fuel	Ratio Heating to Grate Surface
Central stations	10	Water tube	Chain	200 ft. and over	Ill. screenings 15 to 20% ash	65
Central stations.	8	Water tube	*Roney*	200 ft. and over	Bituminous	60
Central stations.	6	Water tube	*Murphy*	200 ft. and over	Bituminous	60
Central stations	9	Water tube	Miscellaneous	200 ft. and over	Anthracite	40
Mfg. plants.	20	Return tubular	Hand fired	150–175	Anthracite	35
Office buildings.	6	Return tubular	Shaking grates	Over 200	Bituminous	48
Central station*.	1	*Babcock & Wilcox*	*Roney*	Over 200	Bituminous	31

*Two stokers, one at front and one at rear of setting. ("Power," Jan. 7, 1908, p. 25.)

The reader is also referred to the table of tests which gives the ratio of heating surface to grate area for water tube boilers, and the rate of combustion and evaporation as obtained by the use of various coals.

The accompanying table of relative values of steam coals is taken from *Meyer's* "Steam Power Plants." The relative evaporative power of the better grades of a number of different coals is shown in the table, Pocahontas coal being placed at 100. These figures are approximate and should be used with some caution. The relative evaporation for the different coals shows what might be expected from the better grades of each kind of coal mentioned when fired by a good fireman under ordinary every-day conditions.

Furnace Volume. Modern practice in the design of boiler furnaces is tending toward larger volumes and high settings, the object being to secure complete combustion before the products of combustion have reached the heating surface.

TABLE 6
RELATIVE VALUES OF STEAM COALS

Kind of Coal	Relative Evaporative Power	Pounds of Water that 1 Lb. of Coal Will Evaporate Into Steam from 212 Deg. F. Ordinary Conditions	Pounds of Coal per Square Feet of Grate per Hour	Ratio of Heating to Grate Area
1—Pocahontas, W. Va.	100.	9 5	15	45
2—Youghiogheny, Pa	92.5	8.7	17	48
3—Hocking Valley, O.	80.	7.6	18	45
4—Big Muddy, Ill.	80.	7 6	20	50
5—Mt. Olive, Ill	67.5	6 4	20	45
6—Lackawanna, Pa., broken	87.	8 5	15	35
7—Lackawanna, Pa., No. 1 B.	73.	7 5	13	32
8—Lackawanna, Pa., Rice	68.	7.	12	30

No. 1 Semi-bituminous.
No. 2, 3, 4, 5 Bituminous.
No. 6, 7, 8 Anthracite.

High furnace temperatures may be maintained which allow the use of cheap coals running high in volatile matter without smoke.

Low gas velocities in the furnace with comparatively high rates of combustion are possible and fine coal may be burned without a large percentage of it being carried over the bridge wall

FIG. 6. SECTION OF WATER-TUBE BOILER WITH HIGH SETTING.

or to the tubes and stack. The extra cost involving the use of high boiler settings is many times offset by the gain due to their use, and high settings are just as advantageous in small as in large plants.

At the *Boston Elevated Railways Co.* South Boston Station, the *B. & W.* boilers are 8 ft. above the stoker grate at the rear.

At the 201st Street Station, *U. E. L. & P. Co.*, New York City, they are 10 ft. above.

At the Delray plant of *Detroit Edison Co.* the gases travel 28 ft. from the underfeed stokers before they strike the heating surface. An 84 in. by 18 ft. *R. T.* boiler in Newark is 72 in. above the grate. The lower row of tubes in the double stoker boiler at the 59th Street power house of the *Interborough Rapid Transit Co.* are about 12 ft. from the stoker set under the rear of the boiler.

Furnace Design for Smokeless Combustion. The following matter in reference to this subject is an extract from a paper before the *Ohio Soc. of Mech., Elec. and Steam Engineers*, 1915, by *Osborn Monnett.*

Conventional settings may often be changed at slight trouble and expense to give great improvement from a smoke standpoint, where high volatile, long flaming coals are used. The type of boiler or furnace has less bearing on smoke performance than putting the combination together so that both have a chance to give the best results.

High Pressure Power Boilers with Chain Grate. Fig. 7–*A* shows in outline an old type, chain-grate setting with a 3½-ft. ignition arch, the stoker being set under the boiler with a clearance of 6 ft. from floor to front header. This setting is typical of the older practice in chain-grate setting, with low, short, flat arch, poor ignition and low capacity. The deadening effect of the bank of tubes is such as to extinguish the flame before combustion has become complete, in the same manner that a wire netting will kill the flame from a gas burner, the result being a great deal of smoke. While this setting gives short flame travel, mere length of flame travel is not always enough to insure a satisfactory setting, unless some positive means are provided to cause a mixture, the gases frequently become stratified, in which case combustion cannot be complete.

In Fig. 7–*B*, the boiler has been raised to 10 ft. under the header; the ignition arch lengthened to 5 ft. and set full extension, which allows more flame travel, but the setting still has some of the defects of the first one and is not good for high capacities. One of the principal defects is that the flow of rich volatile matter may pass into the bank of tubes in an uninterrupted current in the front part of the furnace, while most of the oxygen necessary to burn this volatile matter is passing in at the back part. There is a lack of mixture and consequently incomplete combustion and low economy.

Fig. 7–*C* corrects the above defects by using a longer arch, setting the stoker farther under the boiler, decreasing the floor space occupied and narrowing up the furnace throat opening so that the volatile gases and air mix in a high temperature zone, which easily completes combustion on a 10-ft. setting. Experiments have shown that for commercial use the best throat opening is from 18 to 36 in., the smaller ones being high in maintenance; 30 in. is about the most satisfactory for all-around use.

Another factor, which has had a marked effect on the performance of the later chain-grate settings, has been the height of the ignition arch at the grate; where 11 in. was formerly the standard height for a flat arch, it has now been increased to 15 in., and the slope of the arch has been increased to 2 in. or 3 in. per ft. Where the arch is sprung across the furnace, it is now set level, 9 in. above the grate at the skewback, with a 9-in. spring, making 18 in. at the center of the arch.

For the horizontal baffle little need be said from the smoke standpoint, as this combination is always satisfactory. Fig. 7–*D* shows a setting with 7 ft. 6 in. head room, which can be considered ideal for a chain grate. This dimension may vary considerably without affecting the performance. 6 ft. 6 in. may be considered the minimum head room allowable.

It sometimes happens that, with a tile-roof furnace and a low setting, the furnace gets so hot as to have a bad effect on the life of the brickwork. This can be offset in many instances by baring the lower row of tubes, using T-tile instead of box tile. This allows more rapid heat absorption into the boiler, increasing the life of the brickwork and resulting in a better operating furnace.

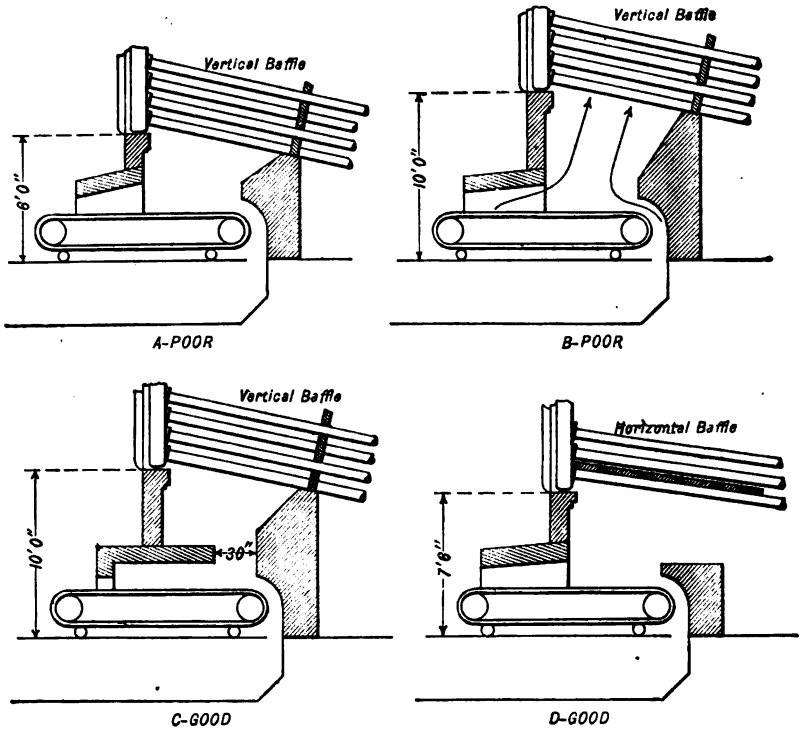

FIG. 7. TYPES OF CHAIN-GRATE SETTINGS.

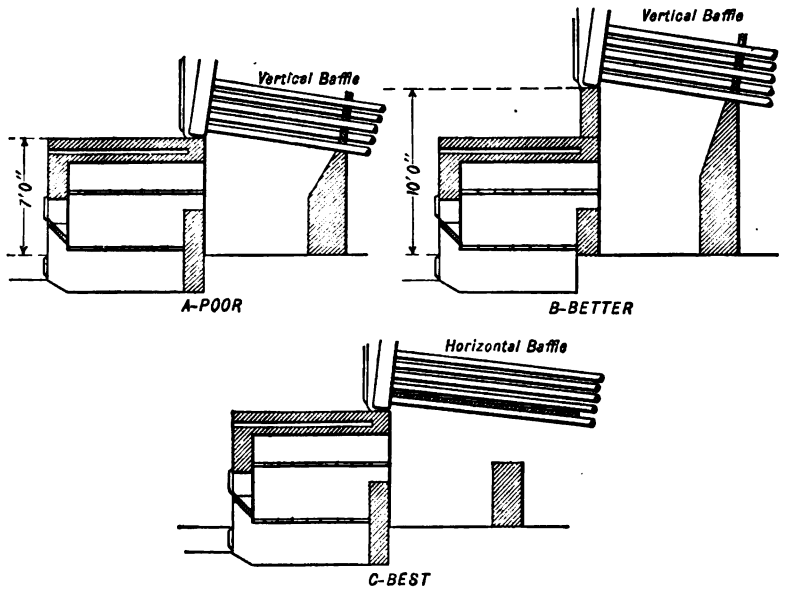

FIG. 8. DOUBLE INCLINED STOKERS AND HORIZONTAL WATER-TUBE BOILERS.

Double-Inclined Stokers. For the double inclined type of stoker the short length of flame, discharging directly into the bank of tubes, is undesirable when the fire is being worked. This type of setting is frequently found installed in a 7-ft. head room, as in Fig. 8–*A*. The human element enters strongly into the matter with such a setting, owing to the possibility of having considerable volatile matter pass off rapidly through carelessness. With a case of this kind it

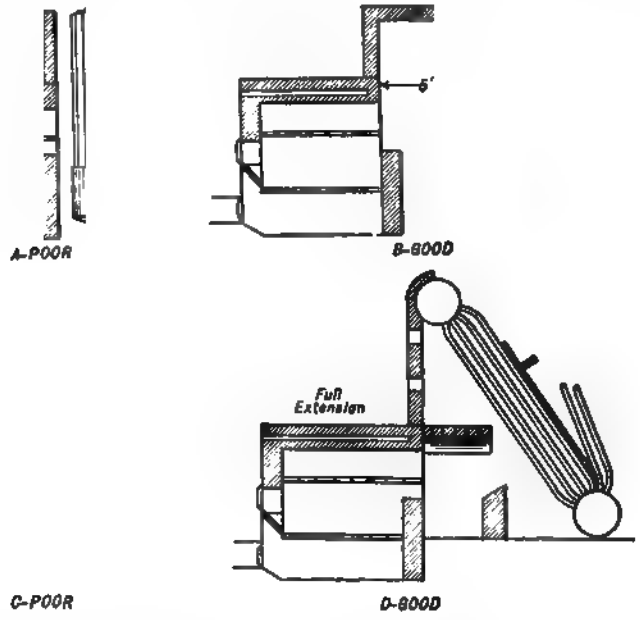

FIG. 9. DOUBLE INCLINED STOKERS AND VERTICAL BOILERS.

is better to set the boiler with a clearance of 10 ft. as in *B*, giving more opportunity for the gases to complete their combustion. One of the safest arrangements is to provide a tile-roof setting with an auxiliary bridge wall (Fig. 8–*C*), breaking up the current of gases and insuring the mixture of any excess amount of volatile matter which may pass off for any cause whatever. The importance of setting this type of furnace with maximum flame travel is not always realized.

In Fig. 9 different types of boilers are shown with good and bad combination of double inclined furnaces. It is a safe rule to get a full extension on this type of furnace and never resort to the flush front setting. In the case of Fig. 9–*A*, the defect of short flame travel is corrected by providing a 5-ft. dog-house extension between the boiler and furnace and by raising the boiler to get the full benefit of the heating surface as shown in *B*. Typical *Stirling* settings are shown in *C* and *D* with flush front and full extension furnaces.

Front-Feed Stokers. With the front-feed stoker the same practice should be observed as regards flame travel. A clearance of 7 ft. is not sufficient to get good results with this type of stoker and vertically baffled water-tube boilers. A much improved furnace can be obtained by using a head room of 10 ft. as in Fig. 10–*B*, a combination resulting satisfactorily from every standpoint. This design also gives an opportunity for employing a vertical bridge wall, which is nearly always found to be a desirable feature wherever it can be used, as the radiating surface of the hot brick helps to keep the gases hot as they pass out of the furnace.

With a horizontal baffle it is a simple matter to combine this type of stoker successfully. Sufficient head room only is required to get the stoker under the front header. If this cannot be

secured in the head room available, it does not alter the effectiveness of the design to excavate as shown in Fig. 10–*C*. Sometimes piers, or deflection arches, are used with this setting to break up the current of gases. Where a free opening in such a setting does not go below 40 per cent of the grate surface of the stoker, such construction is desirable. On a vertical boiler always get the maximum extension possible within reason.

Underfeed Stokers. Different types require different head rooms (Fig. 11). The *Jones* and *American* types can give excellent results with a head room of 8 ft. 6 in. for a vertically baffled

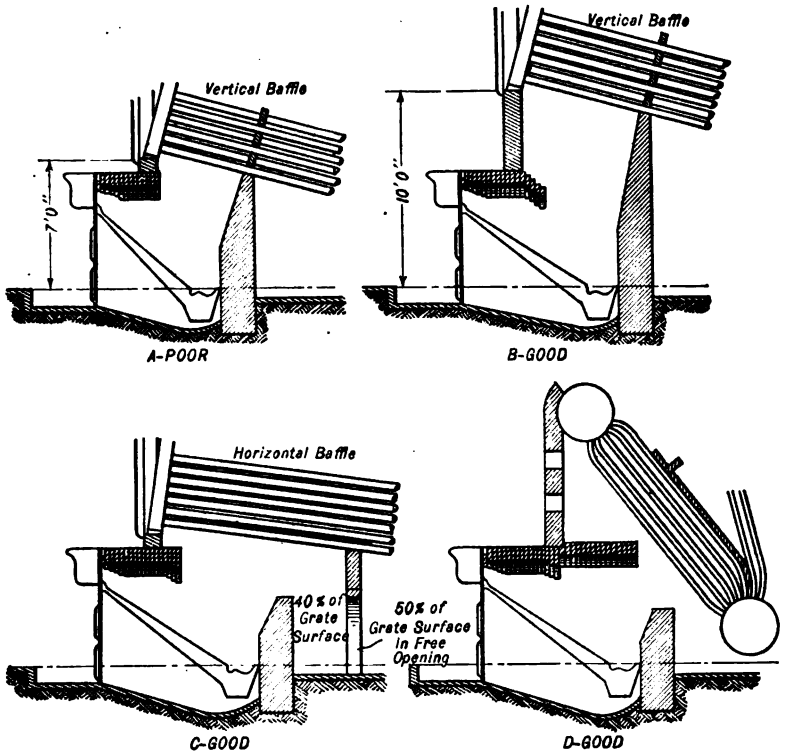

FIG. 10. FRONT-FEED STOKERS WITH VARIOUS BOILERS.

boiler, Fig. 11–*B*, and 7 ft. for a horizontally baffled boiler. In the case of the former the effort should be to provide enough flame travel to minimize the danger of unconsumed volatile matter passing into the bank of tubes.

In the case of tubular boilers the above named types of stokers can be installed with 42 in. from the dead plate to the shell, Fig. 11–*C*, and the combination will result in a satisfactory performance. With stokers of the inclined type, Fig. 11–*D*, a 10-ft. clearance under the front header makes an ideal combination.

Hand-Fired Settings. One of the most common types of boiler setting encountered is the ordinary hand-fired, return-tubular setting such as is indicated in Fig. 12–*A*. In this setting there is no attempt made to accomplish a mixture of the gases after they have passed the bridge wall. The setting, while fairly efficient commercially, is very smoky with high volatile coal, and many attempts have been made to improve it. Fig. 12–*B* shows a full-extension, Dutch-oven setting by which it was attempted to improve the plain hand-firing setting, From a smoke standpoint

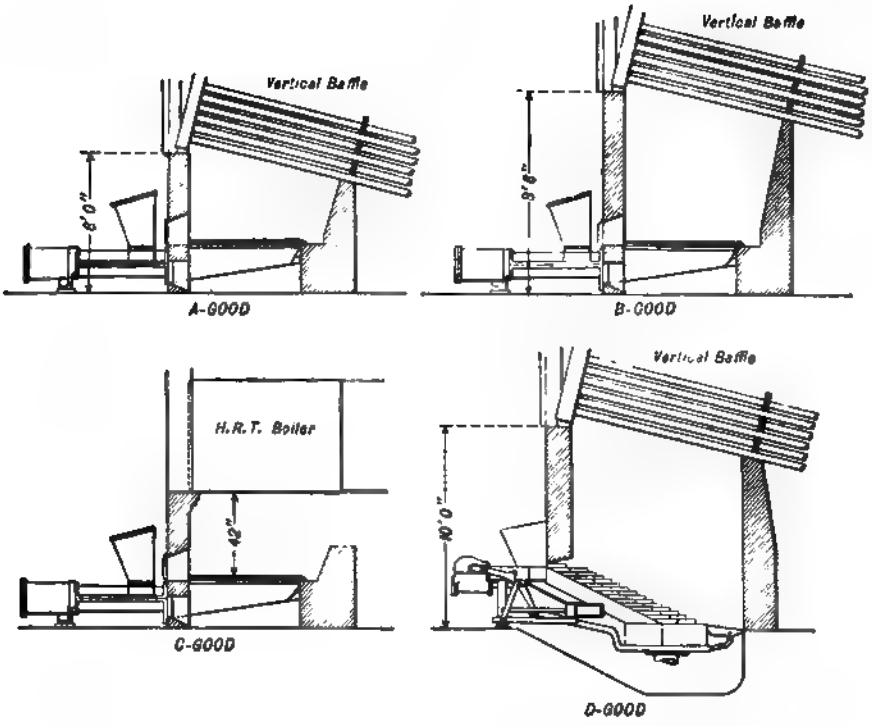

FIG. 11. HEAD ROOMS FOR UNDERFEED BOILERS

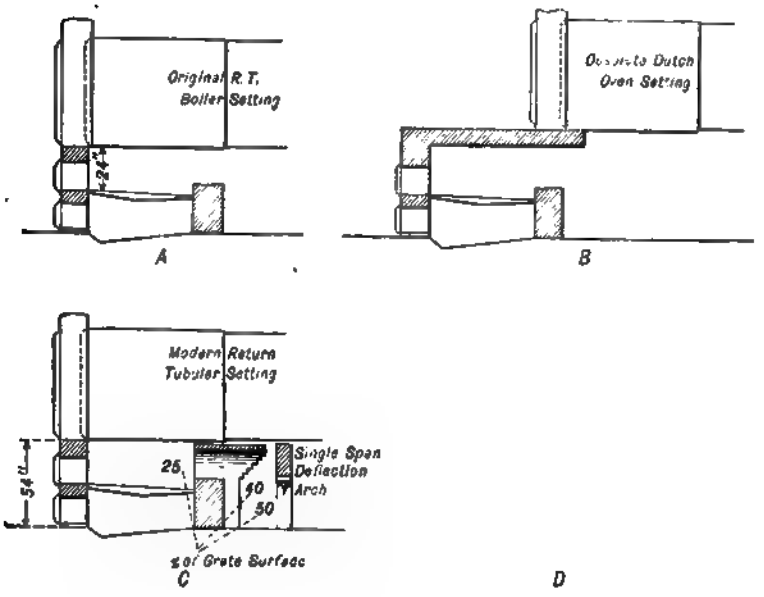

FIG. 12. DEVELOPMENT OF HAND-FIRED FURNACE.

the Dutch-oven setting is a poor combination. Contrary to stoker practice, where the fuel is introduced slowly and in small quantities, there is a considerable quantity of coal thrown on the fire at once. The strong radiation from the brickwork above the fire has the effect of distilling the gases so rapidly that puffs of dense smoke will be made after firing in spite of every effort

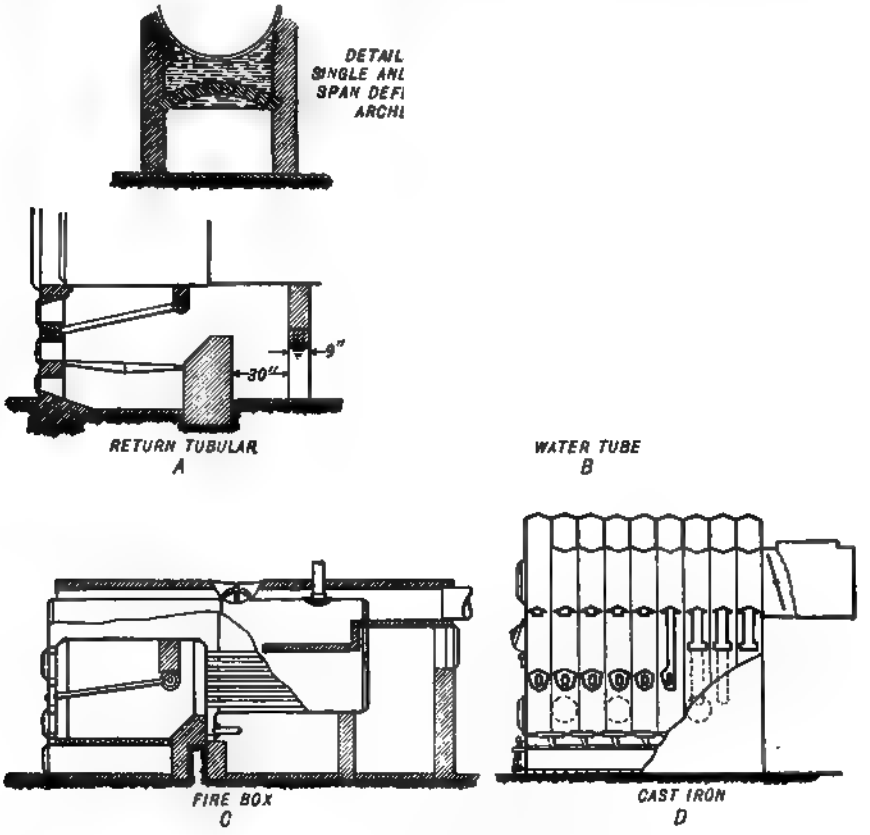

FIG. 13. DOWN-DRAFT SETTINGS FOR HEATING LOADS.

to prevent them. Fig. 12–*C* shows how to correct this defect by exposing the shell to the direct radiation of the fire. This increases the steaming capacity and provides a high temperature zone back of the bridge wall where the gases must mix positively against the deflection arch, which breaks up the stratification and so promotes combustion.

It is not practical to combine a hand-fired, coal-burning furnace with a vertically baffled water-tube boiler, but it is a simple matter to arrange such a furnace with a horizontal baffle, carrying out the same idea as in Fig. 12–*C*. The ordinary hand-fired, horizontally baffled water-tube boiler furnace is covered with box tile and has nearly all the defects of the Dutch oven shown in Fig. 12–*B*, as it is practically a fire-brick enclosed furnace from which the volatile gases will be distilled at a rapid rate. Fig. 12–*D* indicates how this can be overcome. The changes indicated are, first, baring the tubes over the fire, using T-tile, thereby avoiding the radiating effect of a mass of fire-brick; second, installing a 2-span deflection arch to break up the current of gases, as in the case of the return tubular boiler. In both of these furnaces a few simple proportions should be carried out to insure satisfactory results.

There should be from 20 to 25 per cent of the grate surface in free opening above the bridge wall. The free opening from the back of the bridge wall to the deflection arch should not be less than 40 per cent of the grate surface, while the free opening under the deflection arch should be 50 per cent of the grate surface. Hand-fired furnaces for high-pressure work should be fitted with four air-siphon steam jets, spaced across the furnace above the fire-doors, to be used when necessary.

Low-Pressure Heating Plants. The foregoing discussion has been with reference to high-pressure power work. The low-pressure heating plant presents a problem that in some respects is more difficult than any encountered in high-pressure work. The plants are not ordinarily large enough to justify stokers, and, even if such were the case, the character of the attendance is not such as would do justice to the equipment. The temperatures are lower and no steam is available for steam jets or for power to drive apparatus. With such conditions as these to meet it has been found that the down-draft principle works out very well.

A little study will show why this is so. The danger of making smoke on a down-draft furnace comes from getting green coal on the lower grate, so the longer the fire can remain undisturbed the less chance of making smoke. The rate of combustion on heating loads is low, and allows for long periods during which the fires are not disturbed and no smoke is made. During these undisturbed periods there is accumulating on the water grate a thick bed of coked coal, which, when sliced down to the lower grate, does not make smoke because all volatile matter has been distilled off. After slicing, the fire can be heavily charged with fresh coal, without disturbing the fuel bed, consequently without causing smoke. It is then in shape for another long undisturbed period.

Another advantage of the down-draft principle on heating loads comes from the fact that although the rate of combustion may be at times extremely low, yet the water element directly in the fire furnishes a proportionate amount of steam no matter how low the combustion; so the system is more responsive than would be possible with a plain grate boiler.

The down-draft principle can be applied to return tubular or water-tube boilers in the larger units. In these units it is advisable to spring an arch in the path of the gas as shown in Figs. 13–*A* and 13–*B*. As the rate of combustion on these large units at times approximates power conditions, it is desirable to guard against any excessive amount of volatile matter, which might pass over during these periods, by breaking up the current of gases and giving them an opportunity to burn.

For small units there has been developed in the past few years a number of types of self-contained, steel and cast-iron boilers embodying the down-draft principle. In the former type, Fig. 13–*C*, the water element consists of water tubes or pipes extended into headers in the ordinary manner and located in the firebox of a locomotive-type boiler. In the cast-iron, down-draft type, Fig. 13–*D*, the water element is cast integrally with each section, forming the upper grate, the shape of the elements being such as to facilitate the slicing of coked coal down to the lower grate without disturbing the main body of fuel before the volatile matter has been distilled from it. This type is made in sizes up to 10,000 sq. ft. of radiation in one unit, and can be installed several in a battery.

Design of Ash Pits and Hoppers. The capacity of the ash pit should be such as will accommodate the ashes accumulated during 14 to 16 hours' operation at maximum rating in order to avoid the necessity of a night shift for ash handling. The weight and volume of ashes to be provided for may be approximated by assuming the boiler to be operated at 150 per cent overload and applying the following formula:

Let b.hp. = normal boiler rating, boiler horsepower.
C = calorific value of fuel.
E = over-all efficiency of boiler grate and furnace.
W = weight of fuel burned per hour.
a = proportion of ash in fuel.

= 0.10 for high-grade anthracite.
0.15 for Pittsburgh bituminous.
0.20 for Illinois and Indiana bituminous.
0.40 for Iowa and some southwestern localities.

A = weight of ash per hour (1 cu. ft. ash = 40 to 50 lb.).

$$W = \frac{1.5 \times 33{,}524 \times \text{b.hp.} \times E}{C}.$$

$$A = a\,W.$$

Example. Required the capacity of ash hopper for a 300 hp. boiler for the following conditions of operation. Maximum overload 150 per cent, calorific value of fuel 13,500 B.t.u., 15 per cent ash, over-all efficiency 65 per cent. Hopper to hold the ashes for 16 hours' operation.

$$W = \frac{1.5 \times 33{,}524 \times 300 \times 0.65}{13{,}500} = 726 \text{ lb. coal per hour.}$$

$$A = 0.15 \times 726 = 110 \text{ lb. ash per hour.}$$

The volume to be provided is therefore;

$$\frac{110 \times 16}{40} = 44 \text{ cu. ft.}$$

Typical Designs. In small plants in which not over four boilers (1000 b.hp. or less) are operated the ashes are ordinarily removed by hand. The most satisfactory type of pit, in this case, is a plain pit of rectangular section as shown by Fig. 14–*A*.

The ashes must be hoed forward and then shoveled out. The distance the ashes are drawn should be limited to approximately 8 feet and there should be clearance for the hoe handle as the ashes are dragged forward and ample room for shoveling.

In larger-size plants provided with stokers a more elaborate system of ash removal is ordinarily employed. Figs. 14–*B* to *G* and the description following were taken from "Power," Dec., 1914.

Fig. 14–*B* represents a sloping pit. Such pits are used where it is impossible to excavate to a proper depth, but the results are usually unsatisfactory. The design is a failure from the capacity standpoint and also largely from the point of ash removal.

Fig. 14–*C* indicates an ash hopper. These can be made of various designs and are frequently used in the largest stations. It is preferable to have such hoppers lined with fire-brick. They should have large valves, preferably 24 or 30 in. square, as this is a type in which the ash clinkers against the discharge valve. Some designs have been made with diverging sides so that the ash and clinker cannot lodge. This pit indicates that it can be made of ample capacity and that if care be taken in the design the removal of ash is not difficult, but its upkeep is against it; in addition, it is difficult to inspect and to repair.

The pit shown in Fig. 14–*D* is a desirable design and can be made to meet the proper requirements better than any of the others discussed. Ample capacity is provided and the ashes are retained on a horizontal brick-lined or concrete floor and are not in contact with the metal discharge door. There is no tendency, therefore, for the door to warp and become leaky, and the ash itself remains in the same finely divided state in which it was discharged from the grate.

Ashes are removed by a hoe from this pit, and the designer should make sure that the horizontal distance of the ash-pit floor is not over 8 ft. He should also see that there is fully 8 ft. clearance in front of the door for the handle of the hoe when withdrawn. These pits when 6 ft. wide or under should have one 24-in. square cast-iron door; when in excess of this width two doors of this size should be provided.

This design has the three features of capacity, ease of ash removal and low maintenance.

It can be modified to permit shoveling from the floor in cases where the head room is slight or modified to permit hoeing into a railway car where basements are designed along such lines.

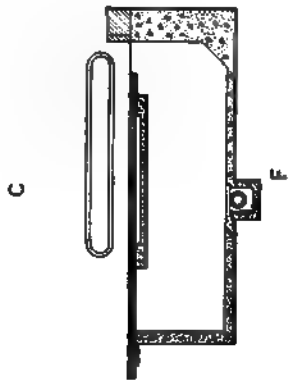

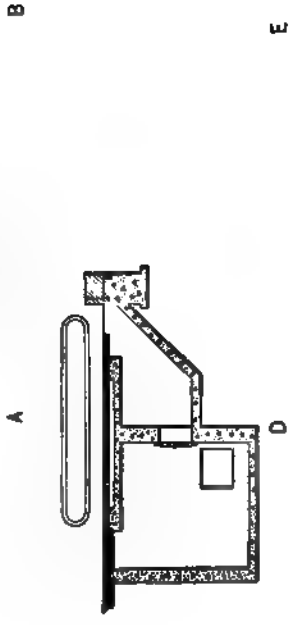

FIG. 14. TYPES OF ASH PITS.

Sometimes, due to soil conditions, to pipe lines or to other local conditions, it is undesirable to excavate for an ash pit in front of the bridge wall and the pit has to be put forward in front of the boilers. This necessitates the use of an ash drag or conveyor, as shown by Fig. 14–*E* The

mechanism for such a device is simple and the results obtained are satisfactory. The arrangement costs more than the plain pit, Fig. 14–*A*, but requires less labor for ash removal, although this is partially offset by the additional labor consequent to an additional piece of conveying machinery. The capacity of such a pit is low, but the danger of overfilling it is removed, the ashes being drawn forward where they can do no harm.

Special types of ash-conveying machinery improve some of the designs materially, for instance, the plain pit shown in Fig. 14–*A*. When provided with a steam-jet system or a pneumatic ash-handling system, Fig. 14–*F*, it becomes a desirable design as to ease of ash removal, although the capacity of the pit is still limited

The hopper arrangement, Fig. 14–*C*, lends itself to almost any type of conveying machinery or car system, as does that shown in Fig. 14–*D*.

The design shown in Fig. 14–*E* can be improved by using the pneumatic ash-handling system or a steam-jet conveyor, Fig. 14–*G*.

The designs shown by Figs. 15, 16 and 17 appeared in the "Practical Engineer," July, 1915, by *R. A. Langworthy*, and refer particularly to ash removal by means of industrial cars run in

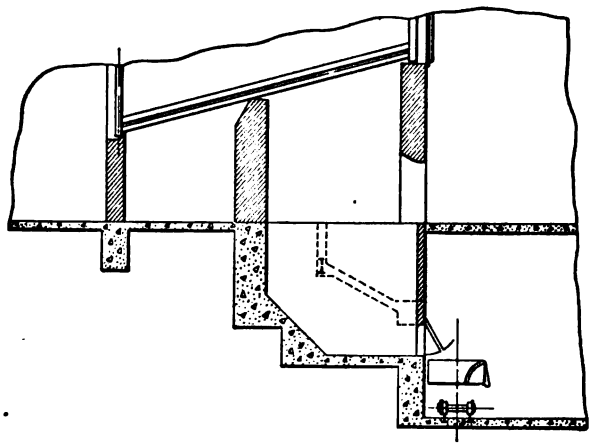

FIG. 15. ASH HOPPER UNDER ROOM WITH NO BASEMENT—SIDE DISCHARGE TO ASH TUNNEL IN FRONT.

the basement of boiler house. This method is perhaps the most practical and certainly an extremely satisfactory method of ash removal whenever the layout may be adapted to this scheme.

"The basement under the boiler plant is most important and should be omitted only after a careful study has developed some particularly good reason for dispensing with it." The head room should never be less than twelve feet, and fifteen feet is preferable.

Two good forms are shown by Figs. 15 and 16. The hoppers are illustrated merely to indicate types and are susceptible of modification to suit the plant under consideration. The hoppers should always be of as large capacity as possible, so that they need not be emptied every time the fire is cleaned. They may be of steel, lined with concrete or brick, or of reinforced concrete, as the designs shown lend themselves readily to either form of construction.

Fig. 17 shows an excellent hopper of large capacity. Its depth will depend upon the available head room, and this should be utilized to a maximum. The duplex gates should not be less than 24 in. square and, if the hopper is wider than about 6 ft., two gates should be used. The figure shows a full basement with thin partition walls to keep the dust and dirt from the remainder of the space. A tunnel might be used with this scheme, to save excavating the rest of the basement space; but if this is done, especial care should be taken to provide adequate ventilation. With the

construction of Fig. 17, little handling of the ashes is required. The car should be of large capacity and is run under the gates, filled and wheeled out.

Fig. 15 shows another good type of ash hopper. It may be used as shown, which requires the excavation of a tunnel in front of a single line of boilers, or of the space between the fronts

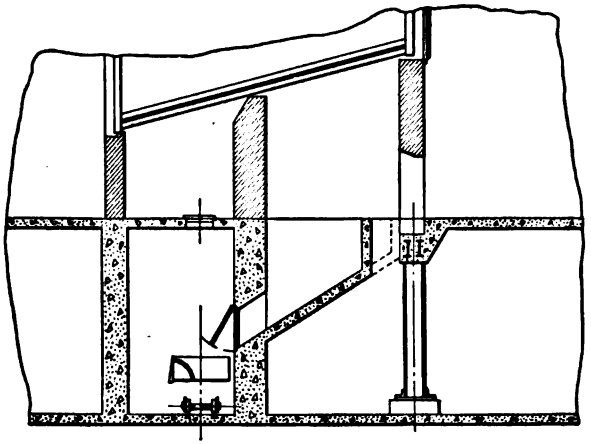

FIG. 16. SIDE DISCHARGE HOPPER TO REAR ASH TUNNEL.

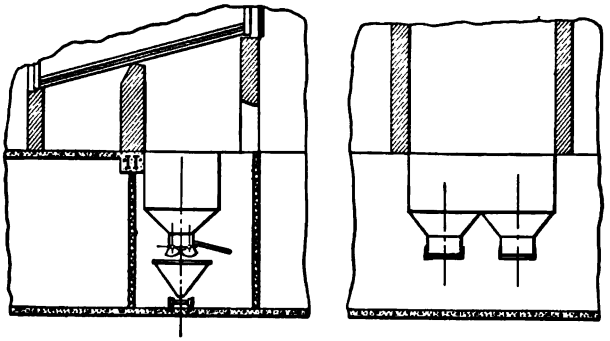

FIG. 17. LARGE CAPACITY ASH HOPPER FOR DEEP BASEMENT; ASH TUNNEL ENCLOSED.

of a double row, or may be hung from the steelwork in a full basement. The dotted lines indicate the construction when used with stoker equipment. With this form of hopper, the ashes must be raked into the car, so that tunnel construction should be made wide enough to allow a man to work handily. This construction will call for less depth of excavation than that shown in Fig. 17, but requires that a man handle the ashes from the hopper into the car.

The construction shown in Fig. 16 involves a tunnel at the rear of the boiler, or may be used as a suspended hopper in the basement where the boiler settings are carried on the first floor steelwork. In the latter case, it leaves the center of the basement free for boiler feed pumps, air ducts, blowers, piping, etc. Some work will be required to get the ashes into the car, but it consists mainly in using a bar to keep them flowing and is an easier proposition than Fig. 15. Fig. 16 may be used without the full basement by excavating only for the ash tunnel and hopper.

From the various figures shown and the description given, some idea of the requirements of

a good ash hopper may be gathered. Make the hopper large enough and all parts heavy. Never use sheet steel in direct contact with the ashes; cast iron is best.

Economical Loads. The most economical "capacity rating" at which to figure the amount of boiler heating surface required for any proposed installation is dependent upon a number of items other than the cost of fuel alone. The cost of the power required as a percentage of the total cost of production in many lines of manufacture is small. For this condition the fixed charges (interest, insurance, taxes, etc.). are not very serious items, convenience in operation and insurance against breakdown being of greater moment. On the other hand, in plants where the product manufactured and sold is "power," economy in its production is obviously essential.

The difficulty frequently experienced in correctly estimating or predetermining the load curve which a proposed plant must eventually carry often makes it impracticable to make any but approximate calculations. In any event the boiler plant must be designed to handle the maximum estimated load with a sufficient reserve capacity to insure against breakdown. The "per cent rating" at which the boilers actually in service are to be operated to secure the maximum economy may be approximated from the data given below.

When boilers are to be run beyond 133⅓ per cent rating particular attention must be given to the question of providing a sufficient intensity of draft to accomplish the result desired, and for high overloads (200 per cent or more) ordinarily requires the installation of mechanical stokers.

The following matter has been condensed from the publication " Steam":

In a broad sense, all loads may be grouped in three classes:

1st. Approximately constant 24-hour load.

2d. The steady 10 or 12-hour load usually with a noonday period of no load.

3d. The 24-hour variable load found in central station practice.

The economical load at which the boiler may run will vary with those groups.

In figuring on the boiler load or the per cent capacity rating at which the boilers should be operated for best economy the broader economy is to be considered. That is, against the boiler efficiency there is to be weighed the first cost of the plant returns on such investment, fuel cost, labor, supplies, repairs, depreciation, taxes, insurance, etc.

1st. *Constant 24-hour Load.* For this condition of operation the most economical load will probably be found between 25 and 50 per cent above the rated capacity of the boilers.

2d. *The Steady 10 or 12-hour Load.* Either an approximately steady load or one with a peak where the boilers have been banked overnight, the capacity at which they may be run with the best economy, all things considered, will be found to be higher than for uniform 24-hour load conditions. This is due to original investment, that is, a given amount of capital can be made to earn a larger return through the higher overload.

Due to difficulties encountered in attempting to continuously operate at high overloads, the probable economical rating for this class of service will lie between 150 and 175 per cent of rating.

3d. *The 24-hour Variable Load.* This is the class of load carried by the central power station. In general where the maximum peak loads occur but a few times a year the plant should be of such a size as to enable it to carry these peaks at the maximum possible overload on the boilers, sufficient margin being allowed for insurance against continuity of service.

With the boilers operating at this maximum overload through the peaks a large sacrifice in boiler efficiency is allowable, provided that by such sacrifice the overload expected is secured.

Some methods of handling a load of this nature are given below:

Certain plant operating conditions make it advisable, from the standpoint of plant economy, to carry whatever load is on the plant at any time on only such boilers as will furnish the power required when operating at ratings of, say, 150 to 200 per cent. That is, all boilers which are in service are operated at such ratings at all times, the variation in load being taken care of by the number of boilers on the line. Banked boilers are cut in to take care of increasing loads and peaks and placed again on bank when the peak periods have passed. It is probable that this method of handling central station load is to-day the most generally used.

Other conditions of operation make it advisable to carry the load on a definite number of

boiler units, operating these at slightly below their rated capacity during periods of light or low loads and securing the overload capacity during peaks by operating the same boilers at high ratings. In this method there are no boilers kept on banked fires, the spares being spares in every sense of the word.

A third method of handling widely varying loads which is coming somewhat into vogue is that of considering the plant as divided, one part to take care of what may be considered the constant plant load, the other to take care of the floating or variable load. With such a method that portion of the plant carrying the steady load is so proportioned that the boilers may be operated at the point of maximum efficiency, this point being raised to a maximum through the use of economizers and the general installation of any apparatus leading to such results. The variable load will be carried on the remaining boilers of the plant under either of the methods just given, that is, at the high ratings of all boilers in service and banking others, or a variable capacity from all boilers in service.

TABLE 7

STOKERS, COAL AND KILOWATTS PER BOILER HORSEPOWER IN LARGE CONDENSING TURBINE PLANTS.

Plant	Kind of Stoker	Kind of Coal	Kw. per B.hp.
			Norm. Emerg.
Delray-Detroit Edison Co	Underfeed	Bituminous	4.22 5.65
201st St., New York City	Underfeed	80% hard, 20% soft	4.7
59th St., New York City	Underfeed and chain grate		4.2
Waterside No. 2	Underfeed	80% hard, 20% soft	4.2
L St. Boston Edison Co	Underfeed	Bituminous	4
So. Boston—Boston E. R. R. Co.	Underfeed	Bituminous 18% volatile	3.75
N. W. Sta., Chicago, Comm. Edison Co.	Chain grate	Bituminous	3.46
Waterside No. 1	Underfeed	80% hard, 20% soft	3.3
Marion, Jersey City, P. S. Corporation	Chiefly underfeed	Bituminous—24% volatile	3

Example. Let it be required to calculate the amount of boiler heating surface for the following condition of operation. Ten or twelve-hour load having a peak, continuity of service essential, steam pressure 125 lb. gage, feed-water temperature 175°. Total weight of dry saturated steam required for the peak load W = 32,971 lb. per hour. Factor of evaporation, F = 1.083. Equivalent evaporation $W \times F$ = 35,708 lb. Assume that a sufficient draft will be provided to successfully burn the grade of coal to be used at a rate of combustion necessary for 135 per cent capacity rating during the peak load periods.

This requires an equivalent evaporation of 3.45 × 1.35 or 4.66 lb. per sq. ft. of heating surface per hour.

Then to carry the peak load when the boilers, in service, are operated at 135 per cent rated capacity will require a total of 35,708/4.66 or 7,662 sq. ft. of heating surface, which is the equivalent of 7,662/10 or 766 boiler horsepower.

Subdivision of Heating Surface. The subdivision of heating surface for a plant of this size would probably lie between the selection of 3–380 or 4–260 normally rated horsepower boilers where one spare boiler is considered sufficient as insurance against breakdown. If two spares are thought to be advisable and are recommended to provide for a contingency of having one boiler out of commission while one is being cleaned then the installation would consist of 4–380 or 5–260 horsepower units.

The curve, Fig. 3, will be found convenient when making a comparative study of the proportions for the heating surface, grate area, size of chimney or induced draft fan required for a particular installation.

TYPES OF POWER BOILERS

No attempt will be made to give a description of the numerous types of power boilers in use. Boilers are classified in general as either of the fire-tube type or the water-tube type. In the fire-

tube boiler the hot gases pass through the tubes and in the water-tube type around the tubes. In so far as efficiency is concerned, exhaustive tests have proven that there is no choice between the water-tube and fire-tube types.

Return Tubular Boilers. This type of fire-tube boiler is the most common for use in small and medium-size installations. The standard brick setting is shown by Fig. 18. The boiler consists simply of a steel plate shell the heads of which form the tube sheets and into which the tubes are expanded. The shell is supported either by lugs, riveted to the shell, resting on wall plates or suspended by hangers from double channels supported by I-beam columns.

The grate bars rest on castings anchored to the front and bridge walls.

The gases pass under the shell over the bridge wall to the rear combustion chamber then through the tubes to the front, out the smoke connection to the breeching, and thence, to the chimney. It is necessary to stay the flat surfaces of the tube sheets above the tubes.

The boilers are manufactured either with or without steam domes. The primary object of the dome being to provide a separating space in order to obtain dry steam. The dome is being discarded for high-pressure work, as the large opening required weakens the shell and adds to the cost. In place of the dome a perforated pipe termed a "dry" pipe is often provided to prevent carrying water over with the steam when the steam nozzle is connected directly to the shell. This type of boiler is built in commercial sizes from 15 to 200 hp. and pressures up to 150 lb. It is cheaper than the water-tube type and economical when properly operated. It requires little overhead room and affords a large heating surface in a small space. It is not found practical, owing to the internal stress set up in the shell by the large difference in temperature existing between the inside and outside surfaces, to use plates much over one-half inch in thickness, the capacity or size for a certain pressure being dependent upon the diameter, which in turn is a function of the thickness of the plates, limits the construction of this type to smaller size units than may be obtained in the water-tube type. The water circulation is not so rapid as in the water-tube type, and they are therefore not so well adapted for rapid forcing to meet the varying demands of a widely fluctuating load such as is found in central-station work. For most manufacturing plant loads this type is, however, suitable and the insurance rates are no higher than with the water-tube type. See Fig. 20 and Tables 9, 10 and 11.

Smokeless Boiler Settings. The following matter, referring principally to return tubular boilers, has been condensed from a paper on "Smoke Prevention" by *Osborn Monnett.** He states that in general where water-tube boilers are installed there is plenty of space, and as a result little difficulty is encountered in abating smoke. The return tubular boiler, however, is chosen largely because of the limited amount of space which is available, and for this reason considerable study and planning must be done in order to prevent the furnaces from forming smoke.

The ratio of grate area to heating surface is the most important problem, and for good practice, where Illinois coal is burned, this should be 1 to 35 to 1 to 45, with an average of about 1 to 40 for return tubular boilers. The grate area is usually too small, and for this reason the fires must be worked too frequently, thus causing them to smoke often and frequently excessively. He recommends the installation of some form of rocking or shaking grate and that the area above the bridge wall be not less than 25 per cent of the grate surface, also that the combustion chamber be kept clean down to the floor line.

The height of the boiler above the grate is an important consideration, and while former practice was from 22 to 24 in., the standard adopted by the Smoke Inspection Department* for boilers of 60 to 72 in. in diameter is 36 in. between the grate and boiler. Many furnaces which smoke have not sufficient gas space back of the boiler, and this dimension should be taken into consideration when smokeless combustion is desired.

Another defect in the boiler settings frequently encountered is the restricted opening from the boiler shell to the uptake to the breeching. The method now adopted for relieving this situation is to cut off a portion of the end of the shell and increase the size of the uptake, thus making sufficient smoke area to carry the gases off without a great amount of friction. He recommends that 25 per cent additional space over the area of the tubes be allowed in the uptake where smoke-

*Chicago, Illinois.

less combustion is desired, and that for proper combustion there should be a draft of 0.22 in. over the fire in hand-fired furnaces.

Common faults encountered in the breeching to boilers are that they are too small, too long, have too many turns and sometimes dips. Breeching should be as short and direct as possible; the ratio for the area of the breeching to the grate surface should be as 1 to 4½. This allows for a speed of the gases of 25 ft. per second with the boiler overloaded.

In the accompanying table are given the stack dimensions for various sizes of horizontal return tubular boilers as recommended for use in Chicago. These heights are greater than ordinarily used in order to secure capacity, the problem having been presented to the Smoke Department not only to eliminate smoke, but to keep up capacity at the same time.

This table applies only when the boilers are connected to the stack by a straight run of breeching which has fully as much area as the stack and in which long, narrow cross-sections and sudden changes of sections or drop in breeching are avoided.

TABLE 8

STACK DIMENSIONS FOR H. R. T. BOILERS

Size of Boiler	Tubes	Number of Boilers on Stack			
		One	Two	Three	Four
48 x 14	34 3½-in.	21½ x 90	30 x 100	37 x 110	42½ x 120
54 x 16	34 4-in.	24½ x 95	34½ x 105	42½ x 115	49 x 125
60 x 16	46 4-in.	28½ x 100	40 x 110	49 x 120	57 x 130
66 x 18	54 4-in.	31 x 110	43½ x 120	53½ x 130	61 x 140
72 x 18	70 4-in.	35 x 120	49½ x 130	60½ x 140	70 x 150
78 x 20	84 4-in.	39½ x 130	56 x 140	68 x 150	78½ x 160

The ordinary Dutch-oven types have become obsolete in Chicago at the present time. Experimenting with baffles has shown that the double-arch bridge wall gives excellent satisfaction for smokeless combustion. A steam jet is sometimes placed in the furnace front, which is recommended for use after firing only.

Horizontal water-tube boiler settings with vertical baffles and ordinary hand-fired furnaces have given considerable trouble in producing smoke, and have therefore been ruled out in Chicago. When a setting of this construction is encountered, the baffles are changed to the horizontal position, using tee tiles over the fire and box tiles over the combustion chamber, this arrangement giving the smokeless combustion desired.

The most difficult proportion which is met is that of mixed fuel consisting of shavings and coal. It has been demonstrated that shavings require about half the draft that is necessary for coal, and where the two fuels are used together, proper regulation of draft is a most difficult proposition for the fireman. One of the most common mixed-fuel furnaces is the full extension dutch oven with horizontal baffles, these being of the box-tile type enclosing the tubes over the fire. A furnace which has met with considerable success in the burning of refuse under water-tube boilers is of the hand-fired type, using box tile over the grates and mixing baffles in the combustion chamber.

Fittings and Connections for Horizontal Return Tubular (H. R. T.) Boilers (Fig. 18).

Feed Line. Fitted with check and stop valve.

Boiler Lead. Fitted with stop and gate valve.

Blow-off Pipe. Run from lowest part of boiler insulated through heating space, pipe not over 2½ in. diameter. For pressures over 135 lb., 2 valves or a cock and a valve are required, all extra heavy fittings. Free expansion must be allowed through brick setting.

Pitch of Boiler not less than 1 in. in 12 ft. of length.

Longitudinal Joints to be above fire line of setting.

Brackets to fit curvature of shell, not more than 2 rivets on each bracket to come in same longitudinal line. From top to bottom rivets in lug not less than 12 in.

Brass or steel boiler bushings through front head, open at end, discharge 3/5 the distance from the front head to the rear head below lowest water level in direction of natural circulation.

Fusible Plug. In rear head, 2 in. or more above upper row of tubes.

Water Column. Connection 1 in. or larger, steam from top of shell, water from 6 in. or more

Non-return

FIG. 18. FITTINGS AND CONNECTIONS FOR RETURN TUBULAR BOILERS.

below center line of boiler, water connection of brass. Lowest part of gage glass above fusible plug and lowest safe water-line. Three gage cocks within visible length of gage glass.

Safety Valve, direct full opening. Discharge pipe direct full opening with open drain.

Stop Valve in each steam outlet on boiler nozzle. Provide drains where water accumulates.

Steam Gage. Connected to steam space by siphon of sufficient size to fill gage tube with water. No valve allowed except cock with T or indicating valve handle in pipe near gage. Dial graduations to read 1½ maximum allowable pressure.

The Scotch Marine Boiler. This is an internally fired boiler of the fire-tube type, a longitudinal section of which is shown by Fig. 19. It is self-contained in that it requires no brick setting.

This type has been used to some extent in office buildings in several of the larger cities. It requires little head room, has a minimum radiation loss, no leakage of cold air through faulty brick settings, and requires a comparatively small amount of space for a given capacity.

The circulation is not so positive as in other types.

The size of the internally fired fire-tube boiler is not limited by the thickness of the shell, as the fire comes in direct contact only with the furnace shell, which is subjected to a compression stress and is of relatively small diameter. Boilers of this type for marine use have been built in units of 500 boiler horsepower and designed to carry a working pressure of 200 lb. per sq. in. This type of boiler is relatively expensive, although the cost of the boiler is offset somewhat by the absence of a brick setting. See Fig. 21 and Table 12.

Water-Tube Boilers. The demand for boilers of larger size than is possible with the return tubular type, greater overload capacity, and ability to respond quickly to sudden demands has led to the selection of the water-tube type of boiler for practically all modern large steam installations.

FRONT EXTERIOR ELEVATION

LONGITUDINAL SECTIONAL ELEVATION.

FIG. 19. INTERNAL FURNACE BOILER OF 250 HP. SCOTCH MARINE TYPE.

TABLE 9

SPECIFICATIONS OF BROS HORIZONTAL TUBULAR BOILERS

For 125 and 150 Pounds Working Pressure

(Without Domes—Flange Steel, 60,000 Pounds T. S., in Shell and Heads)

Horsepower	45	50	55	60	70	80	90	100	110	125	150	175	180	200	200	225
Dimensions	48x12	48x14	48x16	54x14	54x16	60x16	60x18	66x16	66x18	72x16	72x18	72x20	78x18	78x20	84x18	84x20
Number 3" Tubes	46	46	..	..	..	..	..	..	..	..	..	..	...	...	...	...
Number 3½" Tubes	34	34	34	44	44	54	54	66	66	86	86	86	110	110	124	124
Number 4" Tubes	28	28	28	36	36	44	44	54	54	70	70	70	88	88	106	106
Heating Surface 3" Tubes	434	506	...	...	...	...	...	...	.....	.....	.....	.....	.....	.....	.....	.....
Heating Surface 3½" Tubes	374	436	498	564	645	792	891	968	1,089	1,261	1,418	1,576	1,814	2,016	2,046	2,273
Heating Surface 4" Tubes	352	411	470	528	603	737	829	905	1,018	1,173	1,320	1,466	1,659	1,843	1,874	2,082
Heating Surface Shell	101	117	133	132	151	168	189	184	207	201	226	251	245	272	272	294
Thickness Shell 125 lb. Boiler	5/16	5/16	5/16	11/32	11/32	3/8	3/8	13/32	13/32	7/16	7/16	7/16	1/2	1/2	1/2	1/2
Thickness Shell 150 lb. Boiler	11/32	11/32	11/32	3/8	3/8	13/32	13/32	15/32	15/32	1/2	1/2	1/2	17/32	17/32	9/16	9/16
Thickness Heads 125 lb. Boiler	7/16	7/16	7/16	7/16	7/16	7/16	7/16	1/2	1/2	1/2	1/2	1/2	9/16	9/16	5/8	5/8
Thickness Heads 150 lb. Boiler	7/16	7/16	7/16	7/16	7/16	1/2	1/2	1/2	1/2	9/16	9/16	9/16	9/16	9/16	5/8	5/8
Two Steam Openings, each	4½	4½	4½	5	5	5	6	6	6	6	6	6	6	6	8	8
Blow-off Valve	2½	2½	2½	2½	2½	2½	2½	2½	2½	2½	2½	2½	2½	2½	2½	2½
Water Column Connections	1¼	1¼	1¼	1¼	1¼	1¼	1¼	1¼	1¼	1¼	1¼	1¼	1¼	1¼	1¼	1¼
Pop Safety Valve	2	2	2	2½	2½	2½	3	3	3	4	4	4	4	4	4½	4½
Water Gage	¾	¾	¾	¾	¾	¾	¾	¾	¾	¾	¾	¾	¾	¾	¾	¾
Steam Gage	5	5	5	5	5	8½	8½	8½	8½	8½	8½	8½	8½	8½	10	10
Gage Cocks	¾	¾	¾	¾	¾	¾	¾	¾	¾	¾	¾	¾	¾	¾	¾	* ¾
Check and Stop Valves	1¼	1¼	1¼	1¼	1¼	1¼	1½	1½	1½	1½	1½	1½	2	2	2	2
Stack, Gage	16	16	16	16	16	14	14	14	14	14	14	14	12	12	10	10
Stack, Size, One Boiler	24x40	24x50	24x60	26x50	26x60	28x60	28x60	30x60	30x60	34x60	34x60	34x70	38x60	38x70	42x60	42x70
Grates, Size	48x42	48x48	48x48	54x48	54x54	60x54	60x60	66x54	66x60	72x54	72x60	72x66	78x60	78x66	78x72	78x78

Boilers with tube setting in heavy type are standard, and always furnished this way, unless otherwise specified.

Riveting:—Boilers for 125 pounds working pressure, triple rivsted, butt joint. Boilers for 150 pounds working pressure, quadruple riveted, butt joint. Figured to maintain factor of safety of five.

Braces:—Based on 6,000 pounds fiber stress.

Manholes:—All boilers have 11x15 inch flanged manhole under tubes in front head and in top of shell, except 48", which has 8½ x 14½ inch under tubes.

Stock:—Boilers 60", 66" and 72" diameter are carried in stock for immediate shipment.

TABLE 10

DIMENSIONS OF FULL AND OVERHANGING R. T. BOILER SETTINGS

Single and Double Setting

FOUNDATION																		BRICK WORK											SIZE	
a		*b*		*c*	*d*		*e*	*f*	*g*		*h*	*i*	*j*	*k*		*l*		*m*	*n*		*o*	*p*	*q*		*r*	*s*	*t*	*u*	*v*	*A*	*B*
Full Flush	Overhang	Double Setting	Single Setting	Rear	Full Flush	Overhang	Bridge	Space	Full Flush	Overhang	Side	Space	Center	Single Setting	Double Setting	Single Setting	Double Setting	Rear Wall	Full Flush	Overhang	Bridge Wall	Length Ash Pit	Full Flush	Overhang	Side Wall	Center Wall	Height of Side Wall	Bridge Wall Opening	Width Return Space	Diameter Boiler	Length of Boiler
12′10″		6′ 8″	10′10″	31	4′ 0″		32	14	29		31	18	32					19	5′ 0″		20	26	17		19	20	5′ 3″	8	16	30	8
14′10″		6′ 8″	10′10″	31	6′ 0″		32	14	29		31	18	32					19	7′ 0″		20	26	17		19	20	5′ 3″	8	16		10
13′ 2″	Not Furnished in Overhang	7′ 2″	7′ 2″	31	3′10″		32	20	29		31	24	32	8	9	2	3	19	4′10″		20	32	17		19	20	5′ 8″	8	18	36	8
15′ 2″		7′ 2″	11′10″	31	5′10″		32	20	29		31	24	32	8	9	2	3	19	6′10″		20	32	17		19	20	5′ 8″	8	18		10
17′ 2″		7′ 2″	11′10″	31	7′ 4″		32	26	29		31	24	32	8	10	2	4	19	8′ 4″		20	38	17		19	20	5′ 8″	8	18		12
15′ 4″		7′ 8″	12′11″	31	6′ 0″		32	20	29		31	30	33	9	10	3	4	19	7′ 0″		20	32	17		19	21	6′ 3″	10	20	42	10
17′ 4″		7′ 8″	12′11″	31	7′ 6″		32	26	29		31	30	33	9	11	3	5	19	8′ 6″		20	38	17		19	21	6′ 3″	10	20		12
19′ 4″		7′ 8″	12′11″	31	9′ 0″		32	32	29		31	30	33	9	11	3	5	19	10′ 0″		20	44	17		19	21	6′ 3″	10	20		14
15′ 4″		7′10″	13′ 1″	31	6′ 0″		32	20	29		32	30	33	10	12	4	6	19	7′ 0″		20	32	17		20	21	6′ 4″	10	20	44	10
17′ 4″		7′10″	13′ 1″	31	7′ 6″		32	26	29		32	30	33	10	12	4	6	19	8′ 6″		20	38	17		20	21	6′ 4″	10	20		12
19′ 4″		7′10″	13′ 1″	31	9′ 0″		32	32	29		32	30	33	10	12	4	6	19	10′ 0″		20	44	17		20	21	6′ 4″	10	20		14
18′ 3″	16′10″	9′ 4″	15′ 6″	38	7′ 3″	5′10″	36	26	32	26	38	38	38	11	12	5	6	26	8′ 3″	6′10″	24	38	20	14	26	26	7′ 7″	10	22	48	12
20′ 3″	18′10″	9′ 4″	15′ 6″	38	8′ 9″	7′ 4″	6	32	32	26	38	36	38	11	13	5	7	26	9′ 9″	8′ 4″	24	44	20	14	26	26	7′ 7″	10	22		14
22′ 3″	20′10″	9′ 4″	15′ 6″	38	10′ 9″	9′ 4″	36	32	32	26	38	36	38	11	13	5	7	26	11′ 9″	10′ 4″	24	44	20	14	26	26	7′ 7″	10	22		16
20′ 3″	18′10″	9′10″	16′ 6″	38	8′ ~″	7′ 4″	36	32	32	26	38	42	38	12	14	6	8	26	9′ 9″	8′ 4″	24	44	20	14	26	26	8′ 0″	12	22	54	14
22′ 3″	20′10″	9′10″	16′ 6″	38	10′ 3″	8′10″	36	38	32	26	38	42	38	12	14	6	8	26	11′ 3″	9′10″	24	50	20	14	26	26	8′ 0″	12	22		16
22′ 7″	21′10″	10′ 4″	17′ 6″	38	10′ 3″	9′ 6″	40	38	32	26	38	48	38	13	16	7	10	26	11′ 3″	10′ 6″	28	50	20	14	26	26	8′ 8″	12	24	60	16
24′ 7″	23′10″	10′ 4″	17′ 6″	38	11′ 9″	11′ 0″	40	44	32	26	38	48	38	13	17	7	11	26	12′ 9″	12′ 0″	28	56	20	14	26	26	8′ 8″	12	24		18
22′ 7″	21′10″	10′10″	18′ 6″	38	10′ 1″	9′ 4″	42	38	32	26	38	54	38	14	18	8	12	26	11′ 1″	10′ 4″	30	50	20	14	26	26	9′ 1″	12	24	66	16
24′ 7″	23′10″	10′10″	18′ 6″	38	11′ 7″	10′10″	42	44	32	26	38	54	38	14	19	8	13	26	12′ 7″	11′10″	30	56	20	14	26	26	9′ 1″	12	24		18
22′ 9″	21′ 0″	11′ 4″	19′ 6″	38	10′ 3″	8′ 6″	42	38	32	26	38	60	38	15	20	9	14	26	11′ 9″	9′ 6″	30	50	20	14	26	26	9′10″	12	24	72	16
24′ 9″	23′ 0″	11′ 4″	19′ 6″	38	11′ 9″	10′ 0″	42	44	32	26	38	60	38	15	24	21	9	26	12′ 9″	11′ 0″	30	56	20	14	26	26	9′10″	12	24		18
26′ 9″	25′ 0″	11′ 4″	19′ 6″	38	13′ 3″	11′ 6″	42	50	32	26	38	60	38	17	24	11	18	25	14′ 3″	12′ 6″	30	62	20	14	26	26	9′10″	12	24		20
25′ 3″	23′ 6″	11′10″	20′ 6″	38	12′ 3″	10′ 6″	42	44	32	26	38	66	38	18	25	12	19	26	13′ 3″	11′ 6″	30	56	20	14	26	26	10′ 3″	14	30	78	18
27′ 3″	25′ 6″	11′10″	20′ 6″	38	13′ 9″	12′ 0″	42	50	32	26	38	66	38	18	26	12	20	26	14′ 9″	13′ 0″	30	62	20	14	26	26	10′ 3″	14	30		20
25′ 5″	23′ 6″	12′ 4″	21′ 6″	38	11′ 5″	9′ 6″	42	56	32	26	41	66	44	19	26	13	20	26	12′ 5″	10′ 6″	30	68	20	14	29	32	11′ 0″	14	30	84	18
27′ 5″	25′ 6″	12′ 4″	21′ 6″	38	12′11″	11′ 0″	42	62	32	26	41	66	44	20	28	14	22	26	13′11″	12′ 0″	30	74	20	14	29	32	11′ 0″	14	30		20

TABLE 11

DIMENSIONS OF FULL AND OVERHANGING R. T. BOILER SETTINGS

Single and Double Setting

Size		Boiler												Front					Grate		Suspension										
A	B	C		D		E		F		G		H		I	J	K	L	M	N	O	P	Q	R	S		T			U	V	W
Diameter of Boiler	Length of Boiler	Hung Up	On Brackets	Hung Up	On Brackets	100	125–150	100	125–150	100	125–150	100	125–150	100	125–150	Head to Front	Full Flush	Overhang	Floor to Grate	Grate to Boiler	Floor to Top of Front	Width of Grate	Length of Grate	One Boiler	Two Boilers	Length of Column	One Boiler	Two Boilers	Single Setting	Double Setting	Center to Center of Boilers	For Hung Boilers Only	For Hung Boilers Only
30	8		14		14	30		2		36		4		2		9	13		18	16	5′ 6″	30	30						5′ 8″	9′10″	4′2″		
	10		14		14	30		2		42		4		2½		9	13		18	16	5′ 6″	30	30						5′ 8″	9′10″	4′2″		
36	8	13	13	13	13	30		2½		36		4		3		11	13		18	16	6′ 0″	36	36	3″	3″	6′ 8″	5″	8″	6′ 2″	10′10″	4′8″	4′8″	5′10″
	10	13	13	13	13	30		2½		42		4		3		11	13		18	16	6′ 0″	36	36	4″	4″	6′ 8″	5″	8″	6′ 2″	10′10″	4′8″	4′8″	7′10″
	12	13	13	13	13	42		2½		48		4		3		11	13		18	16	6′ 0″	36	42	4″	4″	6′ 8″	6″	9″	6′ 2″	10′10″	4′8″	5′1″	9′ 0″
42	10	16	16	16	16	30		2½		42		5		3		11	13		18	18	6′10″	42	36	4″	4″	7′ 4″	7″	10″	6′ 8″	11′11″	5′3″	5′1″	7′ 4″
	12	18	18	18	18	42		2½		54		5		3		11	13		18	18	6′10″	42	42	4″	5″	7′ 4″	7″	10″	6′ 8″	11′11″	5′3″	5′3″	9′ 0″
	14	19	19	19	19	42		3		54		5		3		11	13		18	18	6′10″	42	48	5″	5″	7′ 4″	7″	10″	6′ 8″	11′11″	5′3″	5′3″	10′10″
44	10	18	18	18	18	30		3		42		5		3		11	13		18	18	6′10″	42	36	4″	5″	7′ 6″	7″	10″	6′10″	12′ 1″	5′3″	5′3″	7′ 0″
	12	19	19	19	19	42		3		48		5		3		11	13		18	18	6′10″	42	42	5″	6″	7′ 6″	7″	10″	6′10″	12′ 1″	5′3″	5′4″	8′10″
	14	19	19	19	19	42		3		54		5		3		11	13		18	18	6′10″	42	48	6″	6″	7′ 6″	7″	10″	6′10″	12′ 1″	5′3″	5′4″	10′10″
48	12	20	20	20	20	42	36	4	4½	48	48	6	4½	4	2½	13	16	10	23	24	8′ 4″	48	42	6″	6″	8′ 9″	8″	12″	8′ 4″	14′ 6″	6′2″	6′2″	8′ 8″
	14	22	22	22	22	42	42	4	4½	54	48	6	4½	4	2½	13	16	10	23	24	8′ 4″	48	48	6″	7″	8′ 9″	8″	12″	8′ 4″	14′ 6″	6′2″	6′4″	10′ 4″
	16	24	23	24	23	48	48	4	4½	54	48	6	4½	4	2½	13	16	10	23	24	8′ 4″	48	48	7″	7″	8′ 9″	8″	12″	8′ 4″	14′ 6″	6′2″	6′6″	12′ 0″
54	14	22	22	22	22	42	42	5	5	60	48	6	5	4	2½	13	16	10	23	24	8′10″	54	48	7″	8″	9′ 3″	8″	12″	8′10″	15′ 6″	6′8″	6′4″	10′ 4″
	16	24	24	24	24	60	54	5	5	60	48	6	5	4	2½	13	16	10	23	24	8′10″	54	54	7″	8″	9′ 3″	8″	12″	8′10″	15′ 6″	6′8″	6′6″	12′ 0″
60	16	24	24	24	24	60	54	6	5	60	48	6	5	4	2½	15	16	10	24	26	9′ 7″	60	54	8″	9″	10′ 0″	10″	12″	9′ 4″	16′ 6″	7′2″	6′8″	12′ 0″
	18	24	28	24	28	66	54	6	6	66	48	6	6	4	2½	15	16	10	24	26	9′ 7″	60	60	9″	9″	10′ 0″	10″	15″	9′ 4″	16′ 6″	7′2″	6′8″	14′ 0″
66	16	30	27	24	27	60	54	6	6	60	48	6	6	4	2½	15	16	10	24	26	10′ 1″	66	54	10″	10″	10′ 6″	10″	15″	9′10″	17′ 6″	7′8″	7′2″	11′ 6″
	18	30	29	24	29	66	54	6	6	66	48	6	6	4	2½	15	16	10	24	26	10′ 1″	66	60	10″	10″	10′ 6″	10″	15″	9′10″	17′ 6″	7′8″	7′2″	13′ 6″
72	16	24	29	24	29	60	54	6	6	60	48	6	6	4	2½	17	16	10	26	28	10′11″	72	54	10″	12″	11′ 4″	10″	15″	10′ 4″	18′ 6″	8′2″	6′8″	12′ 0″
	18	34	29	24	29	66	58	6	6	66	45	6	6	4	2½	17	16	10	26	28	10′11″	72	60	10″	12″	11′ 4″	10″	15″	10′ 4″	18′ 6″	8′2″	7′6″	13′ 2″
	20	36		36			57		6		57		6		2½	17	16	10	26	28	10′11″	72	66	12″	15″	11′ 4″	12″	15″	10′ 4″	18′ 6″	8′2″	7′8″	14′ 0″
78	18	34		24			58		6		45		6		2½	17	16	10	26	28	11′ 5″	78	60	12″	15″	11′10″	12″	15″	10′10″	19′ 6″	8′8″	8′0″	13′ 2″
	20	36		36			57		6		57		6		2½	17	16	10	26	28	11′ 5″	78	66	15″	15″	11′10″	15″	15″	10′10″	19′ 6″	8′8″	8′2″	14′ 0″
84	18	34		24			58		8		45		8		2½	19	16	10	28	30	12′ 3″	78	72	15″	15″	12′ 8″	15″	18″	11′ 4″	20′ 6″	9′2″	8′0″	13′ 2″
	20	36		36			57		8		57		8		2½	19	16	10	28	30	12′ 3″	78	78	15″	18″	12′ 8″	15″	18″	11′ 4″	20′ 6″	9′2″	8′2″	14′ 0″

Among the advantages of the water-tube boiler may be mentioned safety, accessibility for quick steaming, and capacity. The latter two items are due to the more efficient circulation found in water-tube boilers of modern design. Experience has proven that the rate of heat

FIG. 20. RETURN TUBULAR BOILER SETTINGS.
(See Tables, 9, 10 and 11.)

transfer through a metal surface from hot gases to water is dependent upon the velocity of the water over the surface and when a rapid circulation is secured an increase in capacity is the natural result. It is not uncommon to operate water-tube boilers at 150 to 200 per cent of their rated capacity.

The Babcock & Wilcox Boiler. The type of *B. & W.* boiler that is commonly employed in power plants is shown by the accompanying Fig. 22 and Fig. 23.

The boiler is made up of one, two, or three longitudinal drums, 36″ to 42″ diameter, depending upon the size of the units, connected at the front and rear with the inclined tubes by means of vertical tubes expanded into the cast-iron or pressed-steel headers and the forged steel cross box riveted to the shell.

The tubes, usually 4 in. in diameter and 16 to 18 feet in length, are expanded into headers of sinuous form, which dispose the tubes in a staggered position when assembled as a complete boiler. Opposite each tube end in the headers there is placed a handhole of sufficient size to permit cleaning and renewal of a tube. The openings in cast-iron headers are made elliptical, and are closed by inside fitting forged plates with a milled face. The openings in the header have a raised milled seat. The joints between plates and headers are made metal to metal without gasket, and the plate is held in position by studs and forged steel binders and nuts.

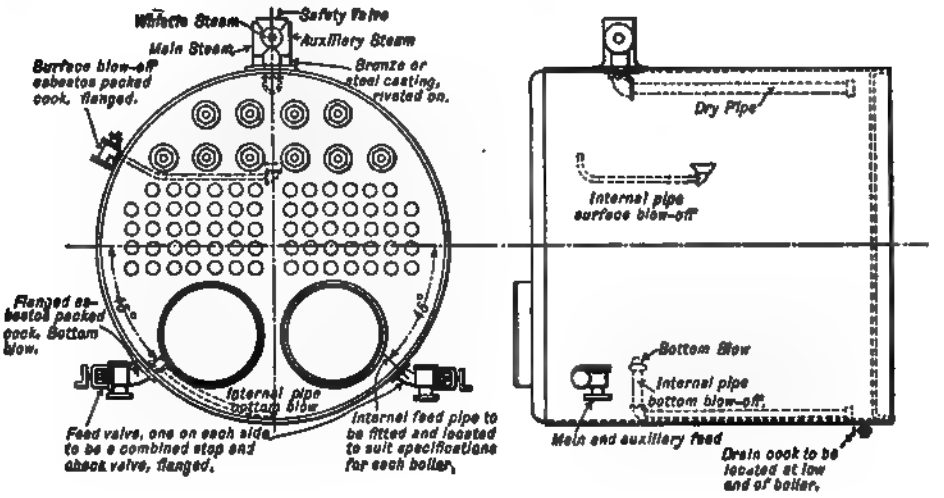

FIG. 21. CONNECTIONS FOR INTERNAL FURNACE BOILERS.

PROPORTIONS PER SQUARE FOOT OF GRATE AREA FOR INTERNAL FURNACE BOILERS

Safety valve	¼ square inch	Main steam	¼ square inch
Auxiliary steam	¼ square inch	Main and auxiliary feed	1/10 square inch
Bottom blow-off	1/10 square inch	Surface blow-off	⅛ bottom blow area

Area of smokestack = 1/5 grate surface
Area over bridge walls = 1/7 grate surface
Least area through tubes = 1/5 grate surface
Ratio heating surface to grate area = 30 or 35 to 1

Grates to have about 45 per cent clear opening unless otherwise directed.

TABLE 12

SPECIFICATIONS OF STANDARD SCOTCH BOILERS

Fixtures include rear smoke doors and frame, furnace front with fire and ash doors, grates, flue plate, smoke bonnet and sides.

Fittings include pop safety valve, combination water column with 5-inch steam gage and siphon, glass water gage and gage cocks, check and stop valves, blow-off valve and stack, and guy wire (four times length of stack).

Cast-iron headers are not recommended for pressures exceeding 160 lb. per sq. inch. The pressed-steel head is equipped with circular outside handhole fittings. Boilers of the longitudinal drum type are suspended front and rear from wrought-steel supporting frames carried by cross channels attached to steel columns. This allows for contraction and expansion of the parts without straining the boiler or the brick setting.

The forged steel drumheads are provided with manholes and plates.

The mud drum to which the header sections are attached at the lower end of the rear

FIG. 22. WROUGHT-STEEL, INCLINED HEADER, LONGITUDINAL DRUM BABCOCK & WILCOX BOILER, EQUIPPED WITH BABCOCK & WILCOX SUPERHEATER.

headers is made up of a forged steel box 7½ in. square and of such a length as to be connected to all of the headers by means of short nipples.

The mud drum is furnished with a handhole for cleaning and tapped for the blow-off connection.

Fittings. Each boiler is provided with the following fittings as part of the standard equipment (Fig. 23):

Blow-off connections and valves attached to the mud drum.

Safety valves placed on nozzles on the steam drums.

A water column connected to the front of the drum.

A steam gage attached to the boiler front.

Feed-water connections and valves. A flanged stop and check valve of heavy pattern is attached directly to each drumhead, closing automatically in case of a rupture in the feed line.

The fixtures that are supplied with the boilers consist of:

Dead plates and supports, the plates arranged for a fire-brick lining.

A full set of grate bars and bearers, the latter fitted with expansion sockets for side walls.

FIG. 23. FITTINGS AND CONNECTIONS FOR WATER-TUBE TYPE BOILER.

Flame bridge plates with necessary fastenings, and special fire-brick for lining same.

Bridge wall girder for hanging bridge wall with expansion sockets for side walls.

A full set of access and cleaning doors through which all portions of the pressure parts may be reached.

A swing damper and frame with damper operating rig.

There are also supplied with each boiler a wrench for handhole nuts, a water-driven turbine tube cleaner, a set of fire tools, and a metal steam hose and cleaning pipe equipped with a special nozzle for blowing dust and soot from the tubes.

The Heine Boiler. Fig. 24 shows a longitudinal section through the *Heine* boiler.

In this type of water-tube boiler the steam drum and tubes are parallel with one another and inclined at an angle of about 22 degrees with the horizontal. The tubes are expanded into a single steel plate riveted header front and rear.

Opposite each of the tube ends, in the headers, there is placed a handhole with cover plate

FIG. 24. HEINE BOILER WITH CHAIN-GRATE STOKER AND SUPERHEATER.

FIG. 25. SECTION OF PARKER DOWN-FLOW BOILER WITH SUPERHEATER.

TABLE 13

DIMENSIONS B. & W. BOILERS

Longitudinal Drum Type

Horse-power at 10 Sq. Ft.	Heating Surface in Sq. Ft.	Sections			Drums			Nozzle		Steam Opening		Safety Valve		Feed	Mud Drums			From Floor Line to Face of Steam Nozzle	From Front Drum Head to Steam Nozzle
		Wide	High	Long	No.	Diam.	Long	Diam.	Flange	Diam.	Flange	No.	Diam.		Hand Hole	Blow-off No.	Blow-off Diam.		
101.8	1,018	6	9	16	1	36″	18′7¼″	5″	11 ″	5″	11 ″	1	3½″	1½″	1″	1	2 ″	14′8 ″	
114.3	1,143	6	9	18	1	36″	20′2 ″	5″	11 ″	5″	11 ″	1	3½″	1½″	1″	1	2 ″	14′8 ″	
117.5	1,175	7	9	16	1	36″	18′7¼″	5″	11 ″	5″	11 ″	1	3½″	1½″	1″	1	2½″	14′8 ″	
132.0	1,320	7	9	18	1	36″	20′2 ″	5″	11 ″	5″	11 ″	1	4 ″	1½″	1″	1	2½″	14′8 ″	
134.5	1,345	8	9	16	1	42″	18′7¼″	5″	11 ″	5″	11 ″	1	4 ″	1½″	2″	1	2½″	15′2 ″	
151.0	1,510	8	9	18	1	42″	20′2 ″	5″	11 ″	5″	11 ″	1	4 ″	1½″	2″	1	2½″	15′2 ″	
150.2	1,502	9	9	16	1	42″	18′7¼″	5″	11 ″	5″	11 ″	1	4 ″	1½″	2″	1	1½″	15′2 ″	
168.7	1,687	9	9	18	1	42″	20′2 ″	6″	12½″	6″	12½″	1	4½″	1½″	2″	1	2½″	15′2 ″	
203.6	2,036	12	9	16	2	36″	18′7¼″	8″	15 ″	8″	15 ″	2	3½″	2 ″	3″	2	2½″	15′8 ″	
228.7	2,287	12	9	18	2	36″	20′2 ″	5″	11 ″	8″	15 ″	2	3½″	2 ″	3″	2	2½″	15′8 ″	
235.1	2,351	14	9	16	2	36″	18′7¼″	5″	11 ″	8″	15 ″	2	4 ″	2 ″	4″	2	2½″	15′8 ″	
264.0	2,640	14	9	18	2	36″	20′2 ″	5″	11 ″	8″	15 ″	2	4 ″	2 ″	4″	2	2½″	15′8 ″	
269.0	2,690	16	9	16	2	42″	18′7¼″	5″	11 ″	8″	15 ″	2	4 ″	2 ″	4″	2	2½″	16′2 ″	
302.1	3,021	16	9	18	2	42″	20′2 ″	5″	11 ″	8″	15 ″	2	4 ″	2 ″	4″	2	2½″	16′2 ″	
300.5	3,005	18	9	16	2	42″	18′7¼″	5″	11 ″	8″	15 ″	2	4 ″	2 ″	4″	2	2½″	16′2 ″	
337.5	3,375	18	9	18	2	42″	20′2 ″	5″	11 ″	8″	15 ″	2	4½″	2 ″	4″	2	2½″	16′4½″	
352.7	3,527	21	9	16	3	36″	18′7¼″	5″	11 ″	10″	17½″	3	4 ″	2½″	4″	3	2½″	15′9 ″	
396.0	3,960	21	9	18	3	36″	20′2 ″	5″	11 ″	10″	17½″	3	4 ″	2½″	4″	3	2½″	15′9 ″	

Horsepower at 10 Sq. Ft.	Grates			Space Occupied		Approximate Weight of Water	Approximate Suspended Weight Including Water	Approximate Total Weight of Setting	Approximate Shipping Weight	Number of Red Brick	Number of Fire-Brick
	Long	Wide	Area Sq. Ft.	Long	Wide						
101.8	6′0″	3′10″	23.00	17′9½″	6′ 8″	9,200	29,800	120,000	26,000	14,200	3,250
114.3	7′0″	3′10″	26.81	19′9 ″	6′ 8″	10,170	31,300	130,600	27,500	15,600	3,550
117.5	6′0″	4′ 5″	26.50	17′9½″	7′ 8″	10,020	32,100	126,600	28,600	14,500	3,450
132.0	7′0″	4′ 5″	30.94	19′9 ″	7′ 8″	11,080	34,300	137,800	30,300	16,000	3,700
134.0	6′0″	5′ 0″	30.00	17′9½″	7′10″	12,330	38,600	135,300	32,700	15,100	3,700
151.0	7′0″	5′ 0″	35.00	19′9 ″	7′10″	13,720	41,300	147,000	34,800	16,600	3,950
150.2	6′0″	5′ 7″	33.50	17′9½″	8′ 5″	13,220	41,300	142,800	36,400	15,300	3,950
168.7	7′0″	5′ 7″	39.06	19′9 ″	8′ 5″	14,670	44,200	155,100	38,300	16,700	4,100
203.6	6′0″	7′ 4″	44.00	17′9½″	10′ 2″	18,400	59,200	151,500	47,400	15,300	4,000
228.7	7′0″	7′ 4″	51.31	19′9 ″	10′ 2″	20,340	63,200	163,600	50,300	17,400	4,550
235.1	6′0″	8′ 6″	51.00	17′9½″	11′ 4″	20,040	64,900	162,500	53,600	16,400	4,400
264.0	7′0″	8′ 6″	59.50	19′9 ″	11′ 4″	22,160	69,300	175,100	56,000	17,900	4,700
269.0	6′0″	9′ 8″	58.00	17′9½″	12′ 6″	24,600	78,000	178,900	62,200	17,200	4,700
302.1	7′0″	9′ 8″	67.66	19′9 ″	12′ 6″	27,400	83,400	191,900	65,900	18,900	5,200
300.5	6′0″	10′10″	65.00	17′9½″	13′ 8″	26,440	83,600	190,700	68,400	17,300	4,950
337.5	7′0″	10′10″	75.81	19′9 ″	13′ 8″	29,340	89,300	204,900	72,500	19,500	5,300
352.7	6′0″	12′ 7″	75.50	17′9½″	15′ 5″	30,060	108,700	209,300	79,100	18,100	5,200
396.0	7′0″	12′ 7″	88.06	19′9 ″	15′ 5″	33,240	116,200	224,100	83,900	20,000	5,400

to allow for cleaning and tube replacement. Horizontal baffling is employed, as shown in the figure.

The mud drum in this type is located inside of the steam drum. The feed water enters through the front steam drum head and is conveyed direct through the feed pipe to the mud drum in which a greater share of the sediment is collected and may be blown off through the upper

FIG. 26. STIRLING WATER-TUBE BOILER WITH SUPERHEATER IN MIDDLE PASS.

blow-off cock or valve. The circulation is down through the rear header, thence through the tubes to the front header and into the steam drum. A baffle is provided over the front header in the steam drum as shown to prevent an excess of free moisture being carried out with the steam. The *Keeler*, *Union* and *Edgemoor* boilers are somewhat similar in construction.

Other Common Types of boilers are shown by Figs. 25 to 29.

FIG. 27. SECTION OF A CAHALL VERTICAL WATER-TUBE BOILER.

FIG. 28. MANNING VERTICAL FIRE-TUBE BOILER.

FIG. 29. THE EDGEMOOR WATER-TUBE BOILER WITH SUPERHEATER.

TABLE 14

PRINCIPAL DIMENSIONS OF HEINE STANDARD SINGLE-DRUM WATER-TUBE BOILER

All Dimensions in Inches

Furnace Width	No. of Tubes	Drum Diameter	Rated Heating Surface	Shipping Weight	2	3	4	5	6	7	8	9	11	12	13	14	Steam Nozzle 15	16	17	Baffle
46	48	30	775	20,800	157 1/2	133 1/2	122	122	81	84	40	60	11 1/2	16 1/2	9	8	4	7 1/2	10	8-3/4
	59		949	22,700	164 1/2	140 1/2	129	129	88				12		9					
53	53	36	873	25,300	163 1/2	139 1/2	128	128	79	91	46		11 3/4							
	68		1,096	27,300	170 1/2	146 1/2	135	136	86				12 1/2							
60	70	36	1,233	29,200	171 1/2	147	136	136	86	98	46		13 3/4							
	94		1,486	31,500	178 1/2	154	143	143	93				14 1/2		12 1/2					
67	86	42	1,331	32,600	179 1/2	154	141	136	87	105	40		14 1/2							
	105		1,664	36,100	186 1/2	161	148	143	94				14 3/4		13		5	9 1/2	11	
74	95	42	1,518	34,900	179 1/2	154	141	136	87	112	40		14 1/2							
	116		1,830	37,500	186 1/2	161	148	143	94				14 3/4							
81	104	48	1,667	38,600	183 1/2	161 1/2	146	136	87	119	42		14 1/2	18	16 1/2	9				
	127		2,010	41,600	197 1/2	170 1/2	153	143	96		50		15 1/4		17					
88	138	48	2,177	45,200	197 1/2	170 1/2	158	143	96	126	50		15 1/4							
	163		2,548	48,200	204 1/2	177 1/2	160	150	103				15 3/4		20 1/2		6	10 1/2	12 1/4	
95	149	48	2,348	48,400	204 1/2	173 1/2	160	143	99	133	48		16							
	176		2,749	51,800	211 1/2	180 1/2	168	150	106				15 1/2		24					12-3/4
102	160	48	2,514	51,200	207 1/2	175	160	143	99	140	48		16 3/4	19 1/2	27 1/2	10 1/2	8	13	15	
	189		2,945	54,700	214	182	168	150	106				17							

NOTE:—Heating surface and shipping weight are based on a tube length of 16 feet.

Remark—Dimension (6) is for 18 ft. tube. Increase (6) 2" for every 2 ft. reduction in length of tube.

For 18 Ft. Tubes (1) = 233. For 14 Ft. Tubes (1) = 185. For 16 Ft. Tubes (1) = 209. For 12 Ft. Tubes (1) = 161. For 18 Ft. Tubes (10) = 41 1/4. For 14 Ft. Tubes (10) = 45 1/4. For 16 Ft. Tubes (10) = 43 1/4. For 12 Ft. Tubes (10) = 47 1/4.

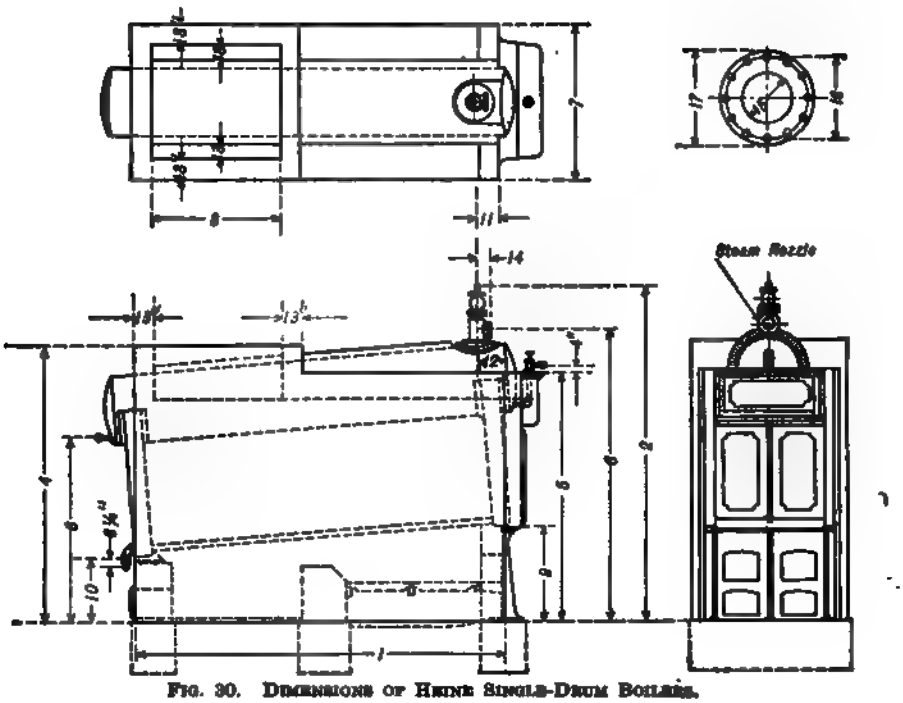

FIG. 30. DIMENSIONS OF HEINE SINGLE-DRUM BOILERS.
(See Table 14.)

FIG. 31. DIMENSIONS OF HEINE DOUBLE-DRUM BOILERS.
(See Table 15.)

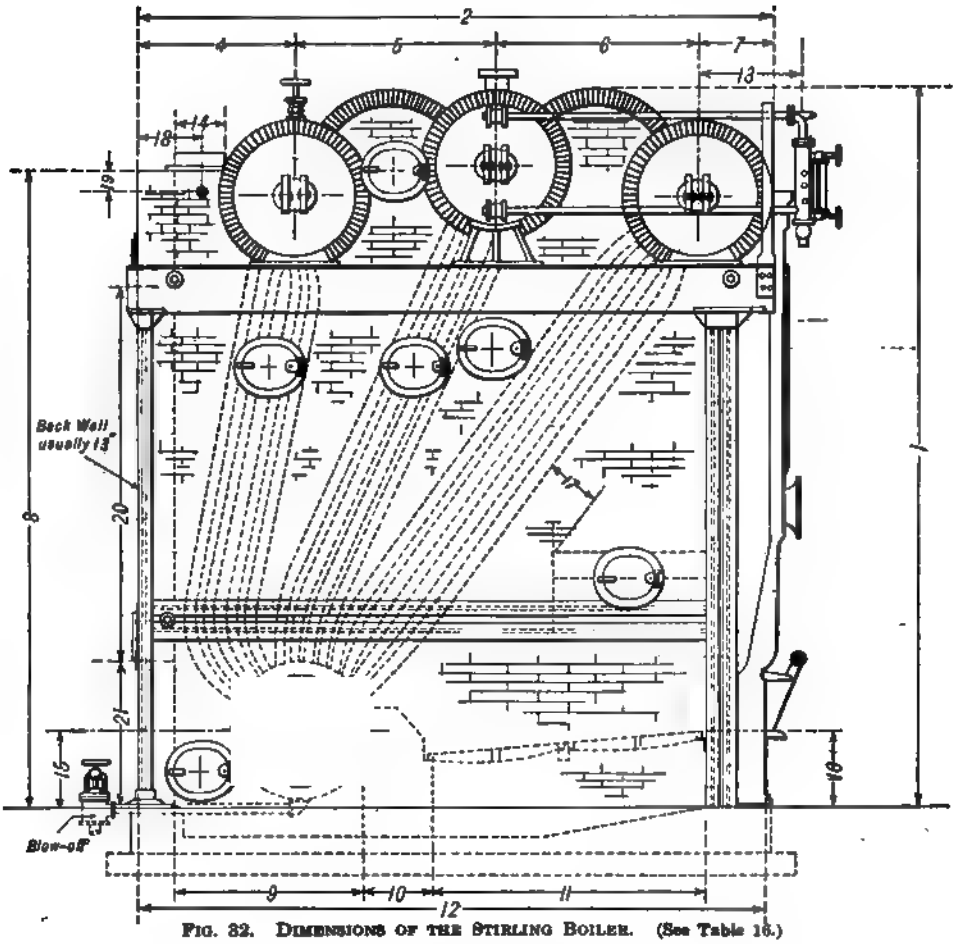

FIG. 32. DIMENSIONS OF THE STIRLING BOILER. (See Table 16.)

TABLE 15

PRINCIPAL DIMENSIONS OF HEINE STANDARD DOUBLE-DRUM WATER-TUBE BOILER

All Dimensions in Inches.

Furnace Width	No. of Tubes	Drum Diameter	Rated Heating Surface	Shipping Weight	2	3	4	5	6	7	8	9	10	12	13	14	15	16	17	Steam Nozzle 18	19	20	Bolts
109	171	36	2,725	55,900	189½	171½	163	150	147	143	100	72	60	15	18	10½	10¾	9	8½	8	13	15	12–⅞
	202		3,186	59,600	196½	178½	170	157		150	107		60	15½	18			9	8½	8	13	15	12–⅞
116	182	36	2,891	58,400	189½	171½	163	150	154	143	100	72	60	15	18	10½	14¼	9	8½	8	13	15	12–⅞
	215		3,382	62,400	196½	178½	170	157		150	107		60	15½	18			9	8½	8	13	15	12–⅞
123	228	36	3,608	70,500	204	186	177½	168	161	150	108	82	60	15½	18	12	11½	9	8½	8	13	15	12–⅞
	265		4,128	74,600	211	193	184½	175		157	115		60	16	18			9	8½	8	13	15	12–⅞
130	241	42	3,802	73,500	204	186	177½	168	168	150	108	74	60	15½	18	12	15	9	8½	8	13	15	12–⅞
	278		4,352	77,300	211	193	184½	175		157	115		60	16	18			9	8½	8	13	15	12–¼
137	254	42	4,000																				
	293		4,580																				
144	267	42	4,190																				
	308		4,800																				
151	280	42	4,390																				
	323		5,030																				
158	293	48	4,610																				
	338		5,280																				
165	360																						

NOTE:—Heating surface and shipping weight are based on a tube length of 16 feet.
Remark—Dimension (8) is for 18 ft. tube. Increase (8) 2" for every 2 ft. reduction in length of tube.
For 18 Ft. Tubes (1) = 233. For 14 Ft. Tubes (1) = 185. For 16 Ft. Tubes (1) = 209. For 12 Ft. Tubes (1) = 161.
For 18 Ft. Tubes (11) = 41¼. For 14 Ft. Tubes (11) = 45¼. For 16 Ft. Tubes (11) = 43¼. For 12 Ft. Tubes (11) = 47¼.

TABLE 16

DIMENSIONS OF STIRLING WATER-TUBE BOILERS

180 Lbs. Pressure—Lap Joints—Single Mud Drum

(All Dimensions in Inches)

Horse-power	Effective Heating Surface	Weight on Piers Single Setting		Drums				Tubes					Number of Bricks		Steam Outlet Diam.	Feed Inlet Diam.	Blow-Off Diam.	Height 1	Length 2
				Diameter		Length		Aver. Length	Number of										
		Front	Rear	Steam	Mud	Steam	Mud		Long	Short	In. Sect.		Red	Fire					
100	1,079	11,400	7,650	36	36	116 5/8	86 5/8	122 1/8	108	24	12		9,400	4,350	5	1 1/2	2 1/2	188	186
150	1,496	14,000	8,900	36	36	122 5/8	92 5/8	131 1/2	143	27	14		12,800	3,800	5	1 1/2	2 1/2	185	213
200	2,000	15,000	12,000	36	42	134 5/8	106 1/8	128 1/4	195	31	16		14,000	5,000	6	1 1/2	2 1/2	184 1/2	241
250	2,523	20,000	14,000	42	42	136 1/8	106 1/8	161 3/4	195	46	17		18,000	5,600	6	2	2 1/2	229	249
300	2,958	22,000	17,000	42	48	136 1/8	109 5/8	168 7/8	225	46	19		18,000	5,900	7	2	2 1/2	247	219
350	3,544	24,000	19,600	42	48	154 1/8	127 1/8	168 7/8	270	54	19		19,300	5,100	7	2	2 1/2	247	219
400	4,113	27,000	19,000	42	48	136 1/8	109 5/8	229 1/2	240	61	21		26,400	7,600	7	2	2 1/2	258	262
600	6,019	38,000	25,000	42	48	190 1/8	163 5/8	218 7/8	360	72	19		30,300	8,900	10	3	2 1/2	294	253

Horse-Power	Width 3		4	5	6	7	8	9	10	11	12	13	14	15	16	Thickness of Furnace Arch	Grate		17
	Single Boiler	Two in Battery															Length	Width	
100	108	204	45 3/4	56	57 1/4	27	177 3/4	51	34 1/2	51 1/2	168	33	17 1/2	24	24	9	54	72	10
150	114	216	52 1/4	69	69	22 1/2	153	57 1/2	45	61 1/2	195	33 1/2	17 1/2	24	24	9	64	78	10
200	126	240	50	84	84	23	151 5/8	70	34 1/2	87 1/2	223	34	17 1/2	24	24	9	90	90	10
250	126	240	45	84	84	26	183	62 1/2	Special	84 1/2	225	37	17 1/2	26	27	9	87	90	10
300	126	240	53 1/2	69 3/4	69 3/4	26	219 1/2	65	24	93 1/2	213 1/2	37	23 1/2	27	27	9	96	90	8
350	144	276	....	....	....	....	219 1/2	....	....	....	213 1/2	37	....	27	27	9	96	108	8
400	126	240	66	78	78	36	298 3/4	77	42 1/2	93 1/2	244	46	23 1/2	30	27	9	96	90	8
600	180	348	68	78	78	27	258	62 1/2	Special	84 1/2	235	38	23 1/2	30	27	9	96	144	12

NOTE:—Heating surface and shipping weight are based on a tube length of 16 feet.

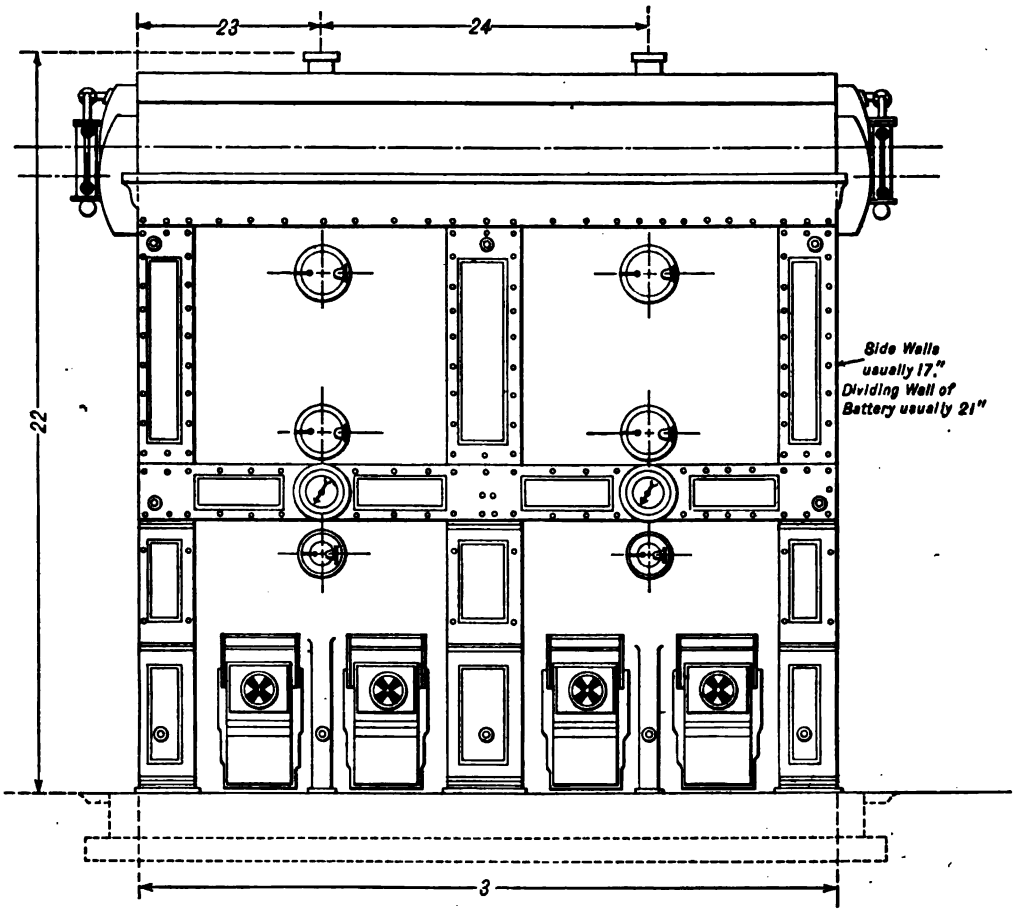

FIG. 33. DIMENSIONS OF THE STIRLING BOILER.
(See Table 16.)

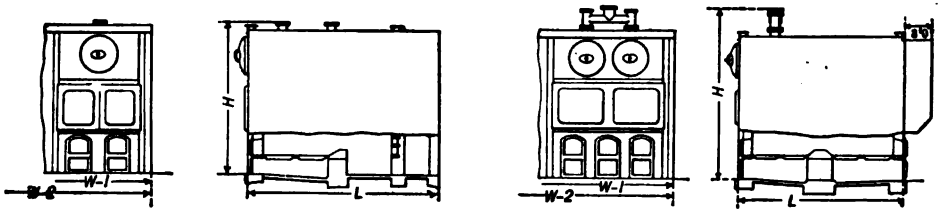

FIG. 34. DIMENSIONS OF THE PARKER WATER-TUBE BOILER.

TABLE 17

DIMENSIONS OF THE PARKER WATER-TUBE DOWN-FLOW BOILER

The above dimensions are based on 17" side walls and 24" dividing walls. The last five sizes are double-ended, and the length of grate is the total for two grates.

TABLE 18

DIMENSIONS OF MANNING BOILERS (*See Fig. 28*)

Rated B.Hp.	Diameter Shell, Inches	Diameter Furnace Outside, Inches	Diameter Tubes Outside, Inches	Length of Tubes, Feet	Number of Tubes	Total Height of Boiler from Floor Line to Top of Bonnet
[illegible]	36	55	2	11	90	19'– 4¼"
62.1	44	61	2¼	13	86	21'– 4½"
76.4	48	65	2½	15	112	22'– 6¼"
84.2	50	67	2½	15	124	22'– 8¼"
102.7	56	73	2½	15	152	23'–10¼"
128.9	61	79	2½	15	184	24'– 1¼"
173.4	72	96	2½	15	260	24'– 5"

Cost of Water-Tube Boilers. The boilers listed in Table 19 following represent actual installations and hold for territory within a radius of approximately 250 miles from Chicago.

The following data may be used for estimating the cost of brick settings:

Allow $20.00 per M for material and labor for common brickwork and $50.00 per M for fire brick in place. For boilers requiring fire-tile add approximately 10 per cent to the fire-brick cost. To the total add approximately 15 per cent for contractor's profit and contingencies. The above figures should result in a cost of brickwork setting of about $2.00 per boiler horsepower based on a rating of 10 sq. ft. per b.hp.

TABLE 19

COST OF HORIZONTAL WATER-TUBE BOILERS INSTALLED, INCLUDING BRICK SETTING

Manufacturer	A	B	C	A	C	D
Boiler horsepower	200	200	200	300	300	300
Working pressure (gage)	150	150	150	150	150	150
Heating surface per b.hp.	10.1	10.35	10.2	10	10	10.35
Grate surface per b.hp. square feet	0.214	0.216	0.220	0.198	0.226	0.217
Diameter steam outlet	6″	6″	8″	8″	6″	7″
Shipping weight per b.hp.	195	210	228	228	195	181
Price per b.hp. f.o.b. cars	$9.00	$9.83	$11.80	$10.65	$10.53	$8.33
Price per b.hp. erected including brickwork	$11.60	$15.05	$14.65	$13.40	$12.72	$10.45
Dimensions of brickwork for two boilers erected in one battery:						
Front width	21′–0″	23′–0″	19′– 6″	24′–2″	22′–9″	23′–0″
Height	15′–5″	16′–8″	15′– 8″	18′–2″	15′–1″	20′–1″
Depth	16′–3″	20′–2″	17′–10″	19′–9″	20′–9″	16′–9″

RULES FOR CONSTRUCTION AND INSTALLATION OF STEAM BOILERS

FORMULATED BY THE BOILER CODE COMMITTEE OF THE
*AMERICAN SOCIETY OF MECHANICAL ENGINEERS**

1. Maximum Allowable Pressure. The maximum pressure to be allowed on the shell or drum of a boiler shall be determined by the strength of the weakest course, due consideration being given in each course to the thickness and the tensile strength of the plate, the efficiency of the longitudinal joint, the inside diameter of the course and the factor of safety allowed by these rules.

$$\frac{T.S. \times t \times \%}{R \times F.S.} = \text{maximum allowable working pressure, per sq. in. in lb.}$$

$T.S.$ = tensile strength of shell plates, in lb. per sq. in.

t = minimum thickness of shell plates, in in.

$\%$ = efficiency of longitudinal joint, method of determining which is given in Par. 74 of these rules.

R = radius — one-half the inside diameter of the outside course of the shell or drum, in in.

$F.S.$ = lowest factor of safety allowed by these rules.

2. The steam pressure allowed on a boiler constructed entirely of cast iron, with the exception of the connecting nipples, or a boiler built of steel plate to be used exclusively for low-pressure heating, shall not exceed 15 lb. per sq. in. This does not apply to economizers.

3. The maximum pressure allowed on hot-water boilers for heating buildings or water for domestic purposes, constructed entirely of cast iron, with the exception of the connecting nipples, or a boiler built of steel plate to be used exclusively for low-pressure heating, shall not exceed 30 lb. when the temperature of the water in the boiler is less than 212 deg. Fahr., unless the boiler has been tested by a hydrostatic pressure to not less than twice the working pressure. When the water in the boiler is 212 deg. Fahr. or over, the maximum pressure allowed may be 30 lb. provided the boiler is tested as hereinafter specified.

4. The pressure allowed on boilers for heating purposes made wholly of cast iron, or on steel boilers with cast-iron mud rings, door frames and manhole flanges, fitted with an approved† type lock-pop safety valve, shall not exceed 15 lb. per sq. in.; and on all steel boilers with steel or wrought-iron mud rings, door frames and manhole flanges, shall be allowed a pressure not to exceed 50 lb. per sq. in. The steel, rivets and materials used in steel boilers, method of manufacture, riveting, bracing, etc., to be *A. S. M. E.* standard throughout, except that in no case

* Extract from Progress Report Boiler Code Committee. Engineers are now specifying that boilers be constructed under these rules.

† Specified by the State Boiler Department.

shall steel of less than ¼ in. in thickness, nor tube sheets or heads of less than $^5/_{16}$ in. in thickness be used for any pressure, and in no case shall the shell or drum of a steel boiler be used for heating purposes provided for in this section, at a working pressure having a factor of safety of less than ten (10). Boilers provided for in this section shall be fitted with approved safety devices. Each boiler must be provided with safety valve of the spring-pop type which cannot be adjusted to a higher pressure than 15 lb. per sq. in. for cast iron or partially cast-iron boilers and 50 lb. per sq. in. for all-steel boilers, such valves to be of the lock-pop type and bearing inspector's tag showing compliance with state requirements. A certificate of inspection must be furnished with every boiler covered by this section, giving detailed description and thickness of metals used covering all the details of construction and test.

5. The maximum pressure allowed on steel or wrought-iron water heaters, connected to open tank on roof or the local water supply system, shall not be over one-half the pressure at which same was tested and marked by the manufacturer. Every such heater is to be tested at twice the allowable working pressure and fitted with manufacturers' brass name-plate marked plainly with the pressure at which vessel was tested and the allowable working pressure which is not to exceed one-half the said test pressure.

6. The pressure allowed on a water-tube boiler, the tubes of which are secured to cast- or malleable-iron headers, or which have cast-iron mud drums, shall not exceed 160 lb. per sq. in. The form and size of the internal cross-section of a cast or malleable header at any point shall be such that it will fall within a 6-in. by 7-in. rectangle. The length of a continuous cast or malleable header shall not exceed 72 in. A hydrostatic test to destruction shall show a pressure per square inch in excess of 1200-lb. gage. A hydrostatic test at 400 lb. per sq. in. gage pressure shall be made on all new headers with tubes attached.

7. **Header Specifications.** Cast iron used for headers shall conform with the following specifications:

(*a*) *Process of Manufacture.* All cast-iron headers shall be made from a good quality, close-grained, grey iron. The following is a preferred analysis:

	Per Cent
Graphitic carbon	3.00
Combined carbon	0.60
Silicon	2.00
Manganese	0.50
Phosphorus	0.50
Sulphur	0.08

(*b*) *Chemical Requirements.* Drillings taken from test pieces as hereafter mentioned shall conform to the following limits in chemical composition:

	Per Cent
Phosphorus not over	0.70
Sulphur not over	0.10

(*c*) *Physical Properties.* Two test bars 1 in. square on 12-in. centers shall show under a centrally applied load an average transverse strength of 2800 lb. and an average deflection of not less than 0.14 in.

(*d*) Two tensile test bars not less than 2 in. in length in the stressed sections shall show an average tensile strength of not less than 25,000 lb. per sq. in.

8. The test bars referred to in (*c*) and (*d*) shall be prepared as follows:

On each lot of not more than twenty headers cast at one heat in the foundry there shall be cast

on two of the headers of the lot, or on the gate or sprue attached to the headers, a bar 1 in. square and 14 in. long, which shall be used as the test bar in the test for transverse strength. When the two bars representing a lot of headers are broken, one of the pieces of each of the two bars shall be made into a test bar for tensile strength, with a diameter of $\frac{3}{4}$ in. for a length of 2 in. in its middle portion.

9. The pressure allowed on a boiler fitted with a state boiler department lock-pop safety valve shall not exceed 15 lb. per sq. in. This special type of safety valve is provided for by Par. 1 of the Engineers' and Firemen's License Law, and applies to boilers used for heating purposes exclusively.

10. **Tensile Strength.** When the tensile strength of steel or wrought-iron shell plates is *not* known, it shall be taken as 55,000 lb. for steel and 45,000 lb. for wrought iron.

11. **Crushing Strength of Mild Steel.** The resistance to crushing of mild steel shall be taken at 95,000 lb. per sq. in. of cross-sectional area.

12. **Shearing Strength of Rivets.** The shearing strength of rivets per sq. in. of cross-sectional area may be taken as follows, and these values were used in calculating the examples of joint efficiencies:

	Pounds
Iron rivets in single shear	38,000
Iron rivets in double shear	70,000
Steel rivets in single shear	42,000
Steel rivets in double shear	78,000

13. The *maximum* shearing strength of rivets per sq. in. of cross-sectional area shall be:

	Pounds
Iron rivets in single shear	38,000
Iron rivets in double shear	76,000
Steel rivets in single shear	44,000
Steel rivets in double shear	88,000

14. Table 20 gives the allowable shearing strength of rivets from $^{11}/_{16}$ in. to $1\,^{1}/_{16}$ in. in diameter, in lb., based on values given in Par. 12.

TABLE 20

ALLOWABLE SHEARING STRENGTH OF RIVETS

Diameter of rivet after driving, in...	$^{11}/_{16}$ 0.6875	$\frac{3}{4}$ 0.75	$^{13}/_{16}$ 0.8125	$\frac{7}{8}$ 0.875	$^{15}/_{16}$ 0.9375	$1\,^{1}/_{16}$ 1.0625
Cross-sectional area of rivet after driving, sq. in.....	0.3712	0.4418	0.5185	0.6013	0.6903	0.8866
	Allowable Shearing Strength, Pound					
Iron, single shear....	14,106	16,788	19,703	22,849	26,231	33,691
Iron, double shear...	25,984	30,926	36,295	42,091	48,321	62,062
Steel, single shear...	15,590	18,556	21,777	25,255	28,993	37,287
Steel, double shear..	28,954	34,460	40,443	46,901	53,843	69,155

15. **Rivets.** When the diameter of the rivet holes in the longitudinal joints of a boiler is *not* known, the diameter and cross-sectional area of rivets shall be ascertained by cutting out one rivet in the body of the joint.

16. **Factors of Safety.** Boilers in service one year after the passage of this act shall have a factor of safety of not less than four (4).

Effective three (3) years from passage of act, the lowest factor shall be 4.25.

Effective five (5) years from passage of act, the lowest factor shall be 4.50.

Effective seven (7) years from passage of act, the lowest factor shall be 4.75.

Effective nine (9) years from passage of act, the lowest factor shall be 5.

Boilers built after passage of this act shall have a factor of safety of not less than five (5).

These rising factors do not apply to water-tube boilers in which the drums are not subject to the radiant heat of the furnace.

17. No lap-seam horizontal return tubular boiler over 36 in. in diameter carrying over 100-lb. pressure will be allowed in service after ten years from the passage of act.

18. **Age Limit.** The age limit on lap-seam horizontal return tubular boilers over 36 in. in diameter carrying over 50-lb. pressure shall be twenty (20) years.

19. **Size of Safety Valves Not Spring-Loaded.** The minimum size of safety valves (other than direct spring-loaded safety valves) shall be governed by the pressure allowed, as stated in the certificate of inspection, and by the grate area of the boiler, subject to the following conditions and as shown by Table 21:

(*a*) A single boiler, or two or more boilers connected to a common main and allowed the *same pressure*. The minimum size of safety valves for each boiler shall be governed by the pressure allowed, as stated in the certificate of inspection, and by the grate area of the boiler.

(*b*) When two or more boilers, which are allowed *different pressures*, are connected to a common steam main, the minimum size of safety valves on each shall be governed by the pressure allowed, as stated in the certificate of inspection, and by the grate area of the boiler; and all safety valves *shall be set* at a pressure not exceeding the lowest pressure allowed. The aggregate valve area shall not be less than that required for the aggregate grate area, based on the lowest pressure allowed, as shown by Table 21.

(*c*) When two or more boilers, which are allowed *different pressures*, are connected to a common steam main, and all safety valves *are not set* at a pressure not exceeding the lowest pressure allowed, the boiler or boilers allowed the lower pressures shall each be protected by an additional safety valve or valves placed on the connecting pipe to the steam main; the area or combined area of the safety valve or valves placed on the connecting pipe to the steam main shall not be less than the area of the connecting pipe, except when the steam main is smaller than the connecting pipe, when the area or combined area of safety valve or valves placed on the connecting pipe shall not be less than the area of the steam main. Each safety valve placed on the connecting pipe shall be set at a pressure not exceeding the pressure allowed on the boiler it protects.

20. Table 21 gives the areas of grate surfaces, in square feet, for other than direct spring-loaded safety valves.

TABLE 21

SIZES OF SAFETY VALVES, NOT SPRING-LOADED, RELATIVE TO STEAM PRESSURE AND GRATE AREA

Maximum Pressure Allowed per Square Inch on Boiler		Zero to 25 Pounds	Over 25 to 50 Pounds	Over 50 to 100 Pounds
Diameter of Valve, Inches	Area of Valve, Square Inches	Area of Grate, Square Feet		
1	0.7854	1.50	1.75	2.00
1¼	1.2272	2.25	2.50	3.00
1½	1.7671	3.00	3.75	4.00
2	3.1416	5.50	6.50	7.25
2½	4.9087	8.25	10.00	11.00
3	7.0686	11.75	14.25	16.00
3½	9.6211	16.00	19.50	21.75
4	12.5660	21.00	25.50	28.25
4½	15.9040	26.75	32.50	36.00
5	19.6350	32.75	40.00	44.00

21. Safety Valves. Each boiler shall have two or more safety valves, excepting a boiler that carries pressure not exceeding 15 lb. (gage) per sq. in., and excepting any boiler for which one safety valve 3-in. size or smaller is required under Pars. 20 and 21 of this section.

22. The discharge capacity of a spring-loaded pop safety valve shall be in accordance with the values in Table 22. The discharge capacity of the safety valve, or i more than one safety valve is used on a boiler, the minimum aggregate discharge capacity of all of the safety valves, as shown in Table 22, shall be not less than the maximum evaporative capacity of the boiler, based upon the maximum amount of fuel that can be burned in any one hour, and the heating value of the fuel, in accordance with Table 23, subject to the following conditions:

(*a*) For a single boiler, or when two or more boilers are connected to a common steam main and allowed the same pressure, the minimum number and size of the safety valves required for each boiler and the minimum aggregate discharge capacity of all of the safety valves on each boiler shall be governed by the working pressure allowed, as stated in the certificate of inspection, and by the maximum evaporative capacity of the boiler, calculated in accordance with Table 22.

(*b*) When two or more boilers, which are allowed different pressures, and are carrying the same steam pressure are connected to a common steam main, the minimum number and size of the safety valves for each boiler shall be governed by the total evaporative capacity of the boiler, calculated in accordance with Table 22, and the lowest working pressure allowed upon any of the boilers, as stated in the certificate of inspection, and in accordance with the values in Table 22, and no safety valves shall be set at a pressure exceeding by more than 5 lb. the lowest working pressure allowed. The aggregate discharge capacity of all of the safety valves shall be at least sufficient to discharge, at the lowest pressure allowed on any of the boilers, the total maximum evaporative capacity of all of the boilers, in accordance with the table in Table 22.

(*c*) When two or more boilers, which are allowed and are carrying different pressures, are connected to a common steam main, the minimum number and size of the safety valves on each boiler shall be governed by the maximum evaporative capacity of the boiler, calculated in accordance with Table 22, and the allowed working pressure for the boiler, as stated in the certificate of inspection, and in accordance with the values in Table 22, and to protect the low-pressure boilers thus connected additional safety valves shall be provided on the low-pressure piping. The aggregate discharge capacity of the additional safety valve or valves on the connecting piping shall be at least sufficient to discharge, at the working pressure allowed on the boiler carrying the lower pressure and connected by such piping, the total evaporative capacity of the boiler or boilers carrying higher pressure; and no such additional safety valves on any connecting piping shall be set at a pressure exceeding by more than 5 lb. the working pressure allowed on the boiler connected by such piping.

23. A table of discharge capacities for direct spring-loaded pop safety valves follows. The discharge capacity of a safety valve is expressed in equations 2 and 3 as the product of values C and H. The discharge capacities given in Table 22 are for each valve size at the pressures shown and are calculated upon the given values of lifts, which have been approved by safety valve manufacturers.

C = total weight, in lb., of fuel of any kind burned per hour at time of maximum forcing. (See Note, page 128.)

H = the heat of combustion, in B.t.u. per lb. of fuel used. (See Note, page 128.)

D = diameter of valve seat, in in.

L = vertical lift of valve disc, in in., measured immediately after the sudden lift due to the pop.

P = absolute boiler pressure per sq. in., or gage pressure plus 14.7 lb.

The boiler efficiency is assumed as 75 per cent.

Discharge efficiency of valve, based upon *Napier's* formula, is taken as 96 per cent.

$$\frac{C \times H \times 0.75}{1100 \times 3600} = \frac{3.1416 \times D \times L \times 0.707 \times P \times 0.96}{70} \quad \text{for valve with 45-deg. seat.} \qquad (1)$$

$C\ H = 160{,}856 \times P \times D \times L$ for valve with bevel seat at 45 deg. . . . . (2)

$C\ H = 227{,}487 \times P \times D \times L$ for valve with flat seat at 90 deg . . . . . (3)

Illustrations. A boiler at the time of maximum forcing uses 2150 lb. of Illinois (Marion County) coal per hour. Boiler pressure, 225-lb. gage.

$$2150 \times 12{,}100 = C\ H = 26{,}015{,}000$$

This requires two 4-in. valves with 45-deg. bevel seat, or one 4½-in. and one 3½-in. valve with 45-deg. bevel seat.

Wood shavings of heat of combustion of 6400 B.t.u. per lb. are burned under a boiler at the maximum rate of 2000 lb. per hour. Boiler pressure 100-lb. gage.

$$2000 \times 6400 = C\ H = 12{,}800{,}000$$

This requires two 3½-in. valves with 45-deg. bevel seat.

$$12{,}800{,}000 \div 1100 = 11{,}637 \text{ lb. of steam discharged per hour.}$$

An oil-fired boiler at maximum forcing uses 1000 lb. of crude oil (Texas) per hour. Boiler pressure 275-lb. gage.

$$1000 \times 18{,}500 = C\ H = 18{,}500{,}000$$

TABLE 22

DISCHARGE CAPACITIES FOR DIRECT SPRING-LOADED POP SAFETY VALVES

Diameter of Valve

This requires one 3½-in. and one 3-in. bevel-seated valve, or one 3-in. and one 2½-in. valve with flat seats.

$$18{,}500{,}000 / 1100 = 16{,}818 \text{ lb. of steam per hour.}$$

A boiler fired with natural gas consumes 3000 cu. ft. per hour. The safety valves are set at 150-lb. gage.

$$3000 \times 960 = CH = 2{,}880{,}000$$

This calls for one 2-in. valve.

For waste-heat boilers C is the maximum weight of gases supplied to the boiler per hour and $H \times 0.75$ should be replaced by $c_p (t_1 - t_2) \times 0.97$, where:

c_p = specific heat of the gases at constant pressure.

t_1 = initial temperature of the gases in deg. Fahr.

t_2 = final temperature of the gases in deg. Fahr.

For most waste-heat work sufficient accuracy is secured by determining the numerical value of the term $0.33 (t_1 - t_2)$ and using this in place of H in the table.

Illustration: Assume C = 90,000 lb. of gas per hour; t_1 = 2000 deg. Fahr.; t_2 = 450 deg. Fahr.; boiler pressure, 150-lb. gage.

$$C \times 0.33 (t_1 - t_2) = 46{,}035{,}000$$

Three 4-in. valves would be required.

Note. The heat of combustion if not known may be determined by a coal calorimeter. The report of the coal-testing plant of the *United States Geological Survey* made in 1904 shows the values for the heat of combustion for coals ordinarily used in the United States as given in Table 23.

In the absence of more exact data, the values of H in B.t.u. per lb. may be assumed for various fuels, in accordance with the following:

TABLE 23

Semi-bituminous coal	14,500
Anthracite	13,700
Screenings	12,500
Coke	7,800
Wood, hard or soft, kiln-dried	7,700
Wood, hard or soft, air-dried	6,200
Wood shavings	6,400
Peat, air-dried, 25 per cent moisture	7,500
Lignite	10,000
Kerosene, per pound	20,000
Petroleum, crude oil, Penn	20,700
Petroleum, crude oil, Texas	18,500

In determining the number and size of safety valves for a boiler using gaseous fuel, C becomes the cu. ft. per hour supplied at time of maximum forcing, and H the higher heating value per cu. ft. The higher heating value is used inasmuch as the boiler efficiency with a gaseous fuel is generally higher than the 75 per cent efficiency assumed in the formula. The values of H may be assumed, in B.t.u. per cu. ft., at 62 deg. Fahr., as follows:

Natural gas	960
Blast-furnace gas	100
Producer gas	150
Water gas, uncarburetted	290

24. The discharge capacity of a safety valve shall be rated in accordance with the values in Table 22. For pressures intermediate between those given in the table, the number and sizes of the safety valves required shall be determined at the nearer pressure shown in the table. The amount of the vertical lift of the valve disc from its seat, measured immediately after the sudden lift due to the pop, must be not less than the value given in Table 22 for the corresponding valve size and pressure. The lift is to be measured with the blow-down adjusted in accordance with Par. 32. The maximum lift of any safety valve for boilers must not exceed fifteen one-hundredths (0.15) in. The discharge rating of a safety valve shall not be greater, for any valve size and pressure, than that given in Table 22.

TABLE 24

VALUES FOR THE HEAT OF COMBUSTION FOR COALS ORDINARILY USED IN THE UNITED STATES

Name of State	Name of Coal and Name of Bed or District from Which Coal Was Received	Carbon Hydrogen Ratio	Calorific Value of 1 Lb. of Coal, B.t.u.
Pennsylvania	Anthracite	26.7	12,472
Arkansas	Spadra Bed	20.7	13,406
W. Virginia	Pocahontas Bed	19.6	13,970
Arkansas	Huntington Bed	19.3	13,961
W. Virginia	Pocahontas Bed	19.2	14,733
Arkansas	Huntington Bed	18.9	13,410
Arkansas	Huntington Bed	18.8	13,655
W. Virginia	New River Field	18.8	14,857
W. Virginia	Pocahontas Field	18.7	15,190
W. Virginia	New River Field	17.8	14,942
W. Virginia	Upper Freeport Bed	16.1	14,129
W. Virginia	Upper Freeport Bed	15.9	13,828
W. Virginia	Kanawha Field	15.7	14,371
W. Virginia	Upper Freeport Bed	15.5	13,736
W. Virginia	Kanawha Field	15.3	14,158
W. Virginia	Pittsburg Bed	14.7	14,164
Kentucky	Eastern Field	14.6	14,319
Kentucky	Western Field	14.6	12,294
Alabama	Warrior Field	14.5	12,958
Alabama	Warrior Field	14.5	12,449
Kansas	Weir Pittsburg Bed	14.5	13,199
W. Virginia	Pittsburg Bed	14.4	13,860
Indian Territory	Hartshorne Bed	14.3	12,969
Indian Territory	McAlester Bed	14.1	12,469
Kansas	Weir Pittsburg Bed	13.9	12,404
Kansas	Weir Pittsburg Bed	13.8	11,880
Illinois	Marion County	13.7	12,103
Indian Territory	Henryetta Bed	13.6	12,620
Iowa	Wapello County	13.4	11,892
Indian Territory	McAlester Bed	13.1	11,889
Kansas	Atchison Field	12.9	12,337
Missouri	Rich Hill Field	12.9	11,144
Kentucky	Western Field	12.7	12,539
Kentucky	Western Field	12.6	12,292
Missouri	Morgan County	12.6	13,529
Iowa	Marion County	12.4	11,182
Illinois	Montgomery County	12.3	11,158
Indiana	Warrick County	12.3	11,538
Iowa	Polk County	12.3	11,356
Illinois	Belleville Field	12.2	11,448
Wyoming	Cambria Field	12.2	10,364
Indiana	Sullivan County	11.9	11,405
Illinois	Belleville Field	11.6	10,991
Iowa	Appanoose County	11.5	11,227
Montana	Red Lodge	11.5	10,777
Missouri	Bevier Field	11.3	10,451
Iowa	Lucas County	11.2	10,989
New Mexico	Black Lignite, Gallup Field	11.2	11,435
New Mexico	Black Lignite, Gallup Field	11.2	10,202
Texas	Brown Lignite, Wood County	10.9	9,904
Colorado	Black Lignite, Boulder Field	10.6	10,791
North Dakota	Brown Lignite, Lehigh Field	10.1	9,061
North Dakota	Brown Lignite, Williston Field	9.8	9,491
Wyoming	Black Lignite, Sheridan Field	9.6	10,355
Texas	Brown Lignite, Houston County	9.4	9,358

25. Safety valves hereafter installed on boilers shall not exceed 4½ in. nominal seat diameter, measured at the inner edge of the valve seat; and no safety valve used on a boiler shall have the valve seat less than 1 in. diameter.

26. Safety valves shall be the direct spring-loaded pop type, with seat and bearing surface of the disc either inclined at an angle of about 45 deg. or flat at an angle of about 90 deg. to the center line of the spindle.

27. When two or more safety valves are used on a boiler, one valve shall be set to open at the allowed pressure stated in the certificate of inspection, and the other valve or valves shall be set to open at pressures at least 3 lb. or 5 lb. higher. If all the valves on a boiler are not of the same size, the valve that is set to open at the allowed pressure shall have a discharge capacity

at least as great as the maximum evaporative capacity of the boiler divided by the number of safety valves on the boiler.

28. When two or more safety valves are used on a boiler, they may be either separate valves or twin valves made by mounting separate valves on Y bases.

29. The safety valve or valves must be connected to the boiler independent of any other steam connection, and attached directly to the boiler or as close as possible to the boiler, without any intervening pipe or other fitting between the valve and the boiler, except the Y base forming a part of a twin valve or the shortest possible nipple or bushing. A safety valve must not be connected to an internal pipe in the boiler. Every safety valve shall be connected so as to stand in an upright position, with spindle vertical, when possible.

30. When a boiler is fitted with two or more safety valves on one connection, this connection to the boiler shall have a cross-sectional area not less than the combined area of all of the safety valves.

31. Each safety valve shall have full-sized direct connection to the boiler. No valve of any description shall be placed between the safety valve and the boiler, nor on the discharge pipe between the safety valve and the atmosphere. When a discharge pipe is used, it shall be not less than the full size of the valve, and the discharge pipe shall be fitted with an open drain to prevent water lodging in the upper part of the safety valve or in the pipe. When an elbow is placed on a safety-valve discharge pipe, the elbow shall be located close to the safety-valve outlet or the pipe shall be securely anchored and supported. All safety-valve discharges shall be so located or piped as to be carried clear from running boards or working platforms used in controlling main stop valves of boilers or steam headers.

32. Safety valves shall be set and adjusted as follows: To close after blowing down at least 2 lb. on boilers carrying allowed pressure not exceeding 15-lb. gage; to close after blowing down at least 3 lb. on boilers carrying pressures over 15-lb. gage and up to and including 125-lb. gage; to close after blowing down at least 4 lb. on boilers carrying over 125-lb. gage and up to and including 200-lb. gage; to close after blowing down at least 6 lb. on boilers carrying over 200-lb. gage pressure.

33. Each safety valve used on a boiler shall have a substantial lifting device, and shall have the spindle so attached to the disc that the valve disc can be lifted from its seat by means of the lifting gear a distance not less than one-eighth the nominal diameter of the valve seat. A safety valve used on hot-water heating boilers need not have lifting gear.

34. Every safety valve shall be plainly marked, either by letters cast in the metal of the body or stamped on the body, with the words "Bevel Seat" or "Flat Seat" according to the type of valve. Valves not marked with the words "Bevel Seat" or "Flat Seat," shall be deemed to have bevel seats.

35. Every new pop safety valve shall be plainly stamped on the body with figures showing the steam pressure at which it is set to blow.

36. Every safety valve shall have the name or identifying trade-mark of the manufacturer plainly cast or stamped on the body.

37. The seats and discs of safety valves shall be of non-ferrous material. A safety valve having either seat or disc of cast iron or steel shall not be used on a boiler for steam or water.

38. Springs used in safety valves must not show a permanent set exceeding $^1/_{32}$ in. ten minutes after being released from a cold compression test closing the spring solid, coil to coil.

39. The spring in a safety valve shall not be used for any pressure more than ten (10) per cent above or below the working pressure for which it was designed.

40. Every safety valve used on a superheater, or discharging superheated steam, shall have a steel body with flanged inlet connection, and shall have the seat and disc of nickel composition or equivalent material, and shall have the spring exposed outside of the valve casing so that the spring shall be protected from contact with the escaping steam.

41. A safety valve used on a superheater shall be not larger than 3-in. size, and shall be connected near the outlet of the superheater. Two or more safety valves may be used on a super-

heater, and one or more safety valves may be placed near the inlet of the superheater. The discharge capacity of the safety valves on a superheater shall not be included in determining the safety valves required for the boiler.

42. During a hydrostatic test of a boiler, the safety valve or valves shall be removed or each valve disc shall be held to its seat by means of a light testing clamp and not by screwing down the compression screw upon the spring.

43. A safety valve over 3-in. size, used for pressure greater than 15-lb. gage, shall have a flanged inlet connection. The dimensions of the flanges of safety valves shall conform to the *American Society of Mechanical Engineers* standard for the corresponding commercial pipe size.

44. **Fusible Plugs.** Fusible plugs, if used, shall be filled with tin with a melting point between 400 and 500 deg. Fahr.

45. The least diameter of fusible metal shall be not less than ½ in., except for working pressures of over 175 lb. or when it is necessary to place a fusible plug in a tube, in which cases the least diameter of fusible metal shall be not less than ⅜ in.

46. Each boiler may have one or more fusible plugs, located as follows:

(*a*) In Horizontal Return Tubular Boilers—in the rear head, not less than 2 in. above the upper row of tubes, the measurement to be taken from the line of the upper surface of tubes to the center of the plug and projecting through the sheet not less than 1 in.

(*b*) In Horizontal Flue Boilers—in the rear head, on a line with the highest part of the boiler exposed to the products of combustion, and projecting through the sheet not less than 1 in.

(*c*) In Locomotive Stationary Type or *Star* Water-tube Boilers—in the highest part of the crown sheet, and projecting through the sheet not less than 1 in.

(*d*) In Vertical Fire-tube Boilers—in an outside tube, not less than one-third the length of the tube above the lower tube sheet, and projecting through the sheet not less than 1 in.

(*e*) In Vertical Fire-tube Boilers, *Corliss* Type—in a tube, not less than one-third the length of the tube above the lower tube sheet.

(*f*) In Vertical Submerged Tube Boilers—in the upper tube sheet.

(*g*) In Water-tube Boilers, Horizontal Drums, *Babcock & Wilcox* Type—in the upper drum, not less than 6 in. above the bottom of the drum, over the first pass of the products of combustion, and projecting through the sheet not less than 1 in.

(*h*) In *Stirling* Boilers, Standard Type—in the front side of the middle drum, not less than 4 in. above the bottom of the drum, and projecting through the sheet not less than 1 in.

(*i*) In *Stirling* Boilers, Superheater Type—in the front drum, not less than 6 in. above the bottom of the drum, exposed to the products of combustion, and projecting through the sheet not less than 1 in.

(*j*) In Water-tube Boilers, *Heine* Type—in the front course of the drum, not less than 6 in. above the bottom of the drum, and projecting through the sheet not less than 1 in.

(*k*) In *Robb-Mumford* Boilers, Standard Type—in the bottom of the steam and water drum, 24 in. from the center of the rear neck, and projecting through the sheet not less than 1 in.

(*l*) In Water-tube Boilers, *Almy* Type—in a tube or fitting exposed to the products of combustion.

(*m*) In Vertical Boilers, *Climax* or *Hazelton* Type—in a tube or center drum not less than one-half the height of the shell, measuring from the lowest circumferential seam.

(*n*) In *Cahall* Vertical Water-tube Boilers—in the inner sheet of the top drum, not less than 6 in. above the upper tube sheet, and projecting through the sheet not less than 1 in.

(*o*) In *Wicks* Vertical Water-tube Boilers, in the shell of the top drum and not less than 6 in. above the upper tube sheet, and projecting through the sheet not less than 1 in.; located so as to be at the front of the boiler and exposed to the first pass of the products of combustion.

(*p*) In Scotch Marine Type Boilers—in the combustion chamber top, and projecting through the sheet not less than 1 in.

(*q*) In Dry Back *Scotch* Type Boilers—in the rear head, not less than 2 in. above the upper row of tubes, and projecting through the sheet not less than 1 in.

(*r*) In Economic Type Boilers—in the rear head, above the upper row of tubes.

(*s*) In Cast-Iron Sectional Heating Boilers—in a section over and in direct contact with the products of combustion in the primary combustion chamber.

(*t*) In Water-tube Boilers, *Worthington* Type—in the front side of the steam and water drum, not less than 4 in. above the bottom of the drum, and projecting through the sheet not less than 1 in.

(*u*) For other types and new designs, fusible plugs shall be placed at the lowest permissible water level, in the direct path of the products of combustion, as near the primary combustion chamber as possible.

47. **Steam Gage.** Each boiler shall have a steam gage connected to the steam space of the boiler by a siphon, or equivalent device, sufficiently large to keep the gage tube filled with water, and connected in such a manner that the steam gage cannot be shut off from the boiler except by a cock with tee or lever handle, which shall be placed on the pipe near the steam gage. Connections to gages shall be made of brass, copper, or bronze composition pipe and fittings from the boiler to the gage. The handle of the cock shall be parallel to the pipe in which it is located when the cock is open.

48. The dial of the steam gage shall be graduated to not less than 1½ times the maximum pressure allowed on the boiler as stated in the certificate of inspection.

49. Each boiler shall be provided with a ¼-in. pipe size connection for attaching the inspector's test gage when the boiler is in service, so that the accuracy of the boiler steam gage can be ascertained.

50. **Water Glass and Gage Cocks.** Each boiler carrying over 15 lb. shall have at least one water glass, the lowest visible part of which shall be not less than 2 in. above the locations established for the top of fusible plugs in Par. 46, whether a fusible plug is used or not. Shut-off valves of the outside screw and yoke gate type are advised in both top and bottom connections to boiler to permit of blowing through either independently.

(*a*) Each boiler shall have two or more gage cocks, located within the range of the visible length of water glass, when the maximum pressure allowed does not exceed 15 lb. per sq. in. except when such boiler has two water glasses, located not less than 3 ft. apart, on the same horizontal line.

(*b*) Each boiler shall have three or more gage cocks, located within the range of the visible length of water glass, when the maximum pressure allowed exceeds 15 lb. per sq. in., except when such boiler has two water glasses, located not less than 3 ft. apart, on the same horizontal line.

51. **Feed Pipe.** Each boiler shall have a feed pipe fitted with a check valve, and also a stop valve or stop cock between the check valve and the boiler. Means must be provided for feeding a boiler with water against the maximum pressure allowed on the boiler.

52. **Stop Valve.** Each steam outlet from a boiler (except safety valve connections) shall be fitted with a stop valve.

53. When a stop valve is so located that water can accumulate, ample drains shall be provided.

54. **Damper Regulator.** When a damper regulator is used, the boiler pressure pipe shall be fitted with a valve or cock, and shall be connected to the steam space of the boiler.

55. **Lamphrey Fronts.** Each boiler fitted with a *Lamphrey* Boiler Furnace Mouth Protector, or similar appendage, having valves on the pipes connecting them with the boiler, shall have these valves locked or sealed *open*, so that the locks or seals will require to be removed or broken to shut the valves.

56. **Bottom Blow-off.** Each boiler shall have a blow-off pipe, fitted with a valve or cock, in direct connection with the lowest water space practicable.

57. **Valves on Return Pipes.** The main return pipe to a heating boiler (gravity return system) shall have a check valve, and also a stop valve between the check valve and the boiler.

58. When there are two connected boilers (gravity return system), a check valve and a stop valve shall be installed in the branch pipe to each boiler, as shown in Fig. 35.

59. **Power Ratings for Classification.** The horsepower of a boiler shall be ascertained upon the basis of 3 hp. for each square foot of grate surface, if the boiler is used for heating purposes

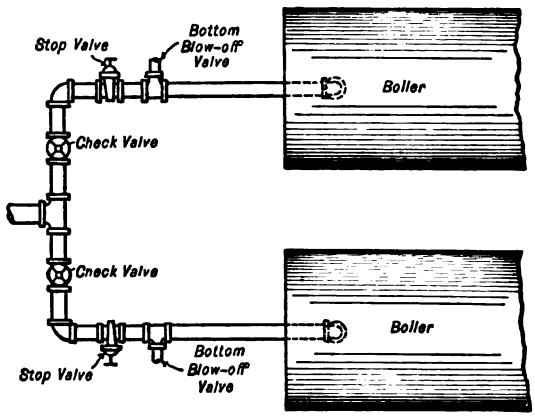

FIG. 35. PROPER ARRANGEMENT OF BLOW-OFF CONNECTIONS TO TWO BOILERS OPERATED ON GRAVITY RETURN SYSTEM.

exclusively, and the safety valve is set to blow at 15 lb. or less. The horsepower of any boiler, whose safety valve is set to blow at over 15 lb., shall be ascertained on the basis of 2 hp. per square foot of grate surface, provided the grate surface is not in excess of 15 sq. ft.; if the grate surface is greater than 15 sq. ft., then the horsepower rating shall be based upon the heating surface, 10 sq. ft. of heating surface to be valued as equivalent to one horsepower. The engine power shall be computed upon a basis of a mean effective pressure of 40 lb. per sq. in. of piston for a simple engine; 50 lb. for a simple condensing engine; and 36 lb. for a compound condensing engine, computed upon the area of the low pressure piston. The power rating of steam turbines shall be based on the builders' brake horsepower name plate rating when such information is available; or when not available and the steam turbine is direct connected to electric generating apparatus the power rating shall be taken as the kilowatt rating of the generator times 1.34. In case other suitable means of determining the rating is lacking, the chief inspector of the State Boiler Department may cause such investigation to be made as is necessary to determine the normal capacity of the turbine, and his decision as to the rating to be allowed shall be final.

60. **Annual Internal Inspections.** The owner or user of a boiler which requires annual inspection, internally and externally, by the boiler inspection department or by an insurance company, as provided by Par. 1 of the Boiler Inspection Law, shall prepare the boiler for inspection by cooling it down (blanking off connections to adjacent boilers, if necessary), removing all soot and ashes from tubes, heads, shell, furnace and combustion chamber; drawing off the water; removing the handhole and manhole plates; removing the grate bars from internally fired boilers; and removing the steam gage for testing.

61. If a boiler has not been properly cooled down, or otherwise prepared for inspection, the boiler inspector shall decline to inspect it, and he shall not issue a certificate of inspection until efficient inspection has been made.

62. In making the annual internal and external inspection under no steam pressure, as provided by Pars. 1 and 3 of the Boiler Inspection Law, the boiler inspector shall apply the hammer test to all internal and external parts of a boiler that are accessible.

63. All proper measurements shall be taken by the boiler inspector, so that the maximum working pressure allowed on a boiler will conform to the rules relating to allowable pressures established by the *Boiler Code Committee* of *The American Society of Mechanical Engineers;* such measurements to be taken and calculations made before a hydrostatic pressure test is applied to a boiler.

64. The steam gage of a boiler shall be tested and its readings compared with an accurate test gage, and if, in the judgment of the boiler inspector, the gage is not reliable, he shall order it repaired or replaced.

65. **Annual External Inspections.** The annual external inspection of a boiler, as provided by Par. 5 of the Boiler Inspection Law, should be made under allowable working pressure at or about six months after the annual internal inspection, except in the case of a boiler that is in service a portion of the year only, in which case the annual external inspection under steam pressure shall be made during such period of service. If a boiler or group of boilers is discontinued for any reason other than defect, from service for long periods, a thorough internal and external inspection under no pressure may be substituted for the regular external inspection under pressure.

66. The boiler inspector shall attach an accurate test gage to a boiler to note the pressure which it shows, and compare it with that shown by the boiler gage, ordering the boiler gage repaired or replaced if necessary.

67. The boiler inspector shall see that the water glass, gage cocks, water-column connections and water blow-offs are free and clear; also, that the safety valve raises freely from its seat.

68. Fire doors, tube doors, and doors in settings shall be open to show as far as possible the fire surface, settings, tube ends, blow-off pipes and fusible plug. The boiler inspector shall note conditions and order changes or repairs if necessary.

69. **Hydrostatic Pressure Tests.** When a boiler is tested with hydrostatic pressure the pressure applied shall not exceed one and one-half times the maximum allowable working pressure; except that a test pressure of 60 lb. shall be applied to the sections of boilers constructed entirely of cast iron (with the exception of their connecting nipples) and where the maximum steam pressure does not exceed 15 lb. per sq. in.

70. Cast-iron water boilers for heating buildings and water for domestic purposes, constructed entirely of cast iron (with the exception of their connecting nipples) and subjected to a working pressure of less than 30 lb., shall be tested with a hydrostatic pressure of 60 lb. per sq. in.

71. Cast-iron water boilers for heating buildings and water for domestic purposes, constructed entirely of cast iron (with the exception of their connecting nipples) and subjected to a working pressure of 30 lb. or over, shall be tested with a hydrostatic pressure of twice the working pressure.

72. Pipe boilers constructed entirely of pipe and pipe fittings may be tested to twice their working pressure.

73. The boiler inspector, after applying a hydrostatic pressure test, shall thoroughly examine every accessible part of the boiler both internally and externally.

74. **Efficiency of Joint.** The ratio which the strength of a unit length of a riveted joint has to the same unit of length of solid plate is known as the efficiency of the joint and shall be calculated as shown by the following examples:

$T.S.$ = tensile strength stamped on plate, in pounds per square inch.
t = thickness of plate, in inches.
b = thickness of butt strap, in inches.
p = pitch of rivets, in inches, on row having greatest pitch.
d = diameter of rivet after driving, in inches = diameter of rivet hole.
a = cross-sectional area of rivet after driving, in square inches.
s = strength of rivet in single shear, as given in Par. 12 of these rules.

S = strength of rivet in double shear, as given in Par. 12 of these rules.
c = crushing strength of mild steel, as given in Par. 12 of these rules.
n = number of rivets in single shear in a unit of length of joint.
N = number of rivets in double shear in a unit of length of joint.

75. Example. Lap joint, longitudinal or circumferential, single-riveted.
A = strength of solid plate = $p \times t \times T.S.$
B = strength of plate between rivet holes = $(p - d)\ t \times T.S.$
C = shearing strength of one rivet in single shear = $n \times s \times a.$
D = crushing strength of plate in front of one rivet = $d \times t \times c.$

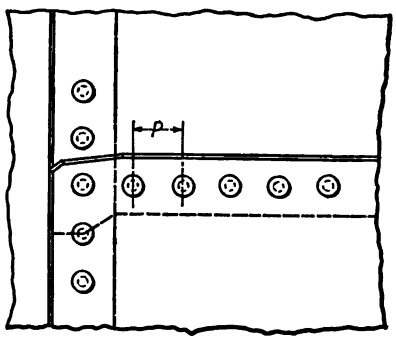

FIG. 36. LAP JOINT, LONGITUDINAL OR CIRCUMFERENTIAL, SINGLE-RIVETED.

Divide B, C, or D (whichever is the least) by A, and the quotient will be the efficiency of a single-riveted lap joint as shown in Fig. 36.

$T.S.$ = 55,000 lb.
t = ¼ in. = 0.25 in.
p = 1⅝ in. = 1.625 in.
d = $\frac{11}{16}$ in. = 0.6875 in.
a = 0.3712 sq. in.
s = 42,000 lb.
c = 95,000 lb.
$A = 1.625 \times 0.25 \times 55{,}000 = 22{,}343.$
$B = (1.625 - 0.6875)\ 0.25 \times 55{,}000 = 12{,}890.$
$C = 1 \times 42{,}000 \times 0.3712 = 15{,}590$
$D = 0.6875 \times 0.25 \times 95{,}000 = 16{,}328.$

$$\frac{12{,}890\ (B)}{22{,}343\ (A)} = 0.576 = \text{efficiency of joint.}$$

76. Example. Lap joint, longitudinal or circumferential, double-riveted. The vertical distance between the two lines of rivet holes commonly termed the back pitch should be about 70 per cent of the pitch, the rivets being staggered.
A = strength of solid plate = $p \times t \times T.S.$
B = strength of plate between rivet holes = $(p - d)\ t \times T.S.$
C = shearing strength of two rivets in single shear = $n \times s \times a.$
D = crushing strength of plate in front of two rivets = $n \times d \times t \times c.$

Divide B, C or D (whichever is the least) by A, and the quotient will be the efficiency of a double-riveted lap joint. (Fig. 39).

$T.S.$ = 55,000 lb.
t = $\frac{5}{16}$ in. = 0.3125 in.
p = 2⅞ in. = 2.875 in.
d = ¾ in. = 0.75 in.
a = 0.4418 sq. in.
s = 42,000 lb.
c = 95,000 lb.
$A = 2.875 \times 0.3125 \times 55{,}000 = 49{,}414.$
$B = (2.875 - 0.75)\ 0.3125 \times 55{,}000 = 36{,}523.$
$C = 2 \times 42{,}000 \times 0.4418 = 37{,}111.$
$D = 2 \times 0.75 \times 0.3125 \times 95{,}000 = 44{,}531.$

$$\frac{36{,}523\ (B)}{49{,}414\ (A)} = 0.739 = \text{efficiency of joint.}$$

77. Example. Butt and double strap joint, double-riveted.

A = strength of solid plate = $p \times t \times T.S.$

B = strength of plate between rivet holes in the outer row = $(p - d)\ t \times T.S.$

C = shearing strength of two rivets in double shear, plus the shearing strength of one rivet in single shear = $N \times S \times a + n \times s \times a.$

D = strength of plate between rivet holes in the second row, plus the shearing strength of one rivet in single shear in the outer row = $(p - 2d)\ t \times T.S. + n \times s \times a.$

E = strength of plate between rivet holes in the second row, plus the crushing strength of butt strap in front of one rivet in the outer row = $(p - 2d)\ t \times T.S. + d \times b \times c.$

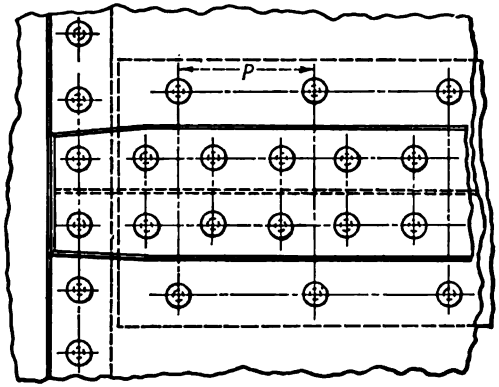

FIG. 37. BUTT AND DOUBLE STRAP JOINT, DOUBLE-RIVETED.

F = crushing strength of plate in front of two rivets, plus the crushing strength of butt strap in front of one rivet = $N \times d \times t \times c + n \times d \times b \times c.$

G = crushing strength of plate in front of two rivets, plus the shearing strength of one rivet in single shear = $N \times d \times t \times c + n \times s \times a.$

Divide B, C, D, E, F or G (whichever is the least) by A, and the quotient will be the efficiency of a butt and double strap joint, double-riveted, as shown in Fig. 37.

$T.S.$ = 55,000 lb.
t = $\frac{3}{8}$ in. = 0.375 in.
b = $\frac{5}{16}$ in. = 0.3125 in.
p = $4\frac{7}{8}$ in. = 4.875 in.
d = $\frac{7}{8}$ in. = 0.875 in.
a = 0.6013 sq. in.
s = 42,000 lb.
S = 78,000 lb.
c = 95,000 lb.

Number of rivets in single shear in a unit of length of joint = 1.
Number of rivets in double shear in a unit of length of joint = 2.

$A = 4.875 \times 0.375 \times 55{,}000 = 100{,}547.$
$B = (4.875 - 0.875)\ 0.375 \times 55{,}000 = 82{,}500.$
$C = 2 \times 78{,}000 \times 0.6013 + 1 \times 42{,}000 \times 0.6013 = 119{,}057.$
$D = (4.875 - 2 \times 0.875)\ 0.375 \times 55{,}000 + 1 \times 42{,}000 \times 0.6013 = 89{,}708.$
$E = (4.875 - 2 \times 0.875)\ 0.375 \times 55{,}000 + 0.875 \times 0.3125 \times 95{,}000 = 90{,}429.$
$F = 2 \times 0.875 \times 0.375 \times 95{,}000 + 0.875 \times 0.3125 \times 95{,}000 = 88{,}320.$
$G = 2 \times 0.875 \times 0.375 \times 95{,}000 + 1 \times 42{,}000 \times 0.6013 = 87{,}599.$

$$\frac{82{,}500\ (B)}{100{,}547(A)} = 0.820 = \text{efficiency of joint.}$$

78. Example. Butt and double strap joint, triple-riveted.

A = strength of solid plate = $p \times t \times T.S.$

B = strength of plate between rivet holes in the outer row = $(p - d)\ t \times T.S.$

C = shearing strength of four rivets in double shear, plus the shearing strength of one rivet in single shear = $N \times S \times a + n \times s \times a.$

FIG. 38. BUTT AND DOUBLE STRAP JOINT, TRIPLE-RIVETED.

D = strength of plate between rivet holes in the second row, plus the shearing strength of one rivet in single shear in the outer row $= (p - 2d)\ t \times T.S. + n \times s \times a$.

E = strength of plate between rivet holes in the second row, plus the crushing strength of butt strap in front of one rivet in the outer row $= (p - 2d) \times T.S. + d \times b \times c$.

F = crushing strength of plate in front of four rivets, plus the crushing strength of butt strap in front of one rivet $= N \times d \times t \times c + n \times d \times b \times c$.

G = crushing strength of plate in front of four rivets, plus the shearing strength of one rivet in single shear $= N \times d \times t \times c + n \times s \times a$.

Divide B, C, D, E, F or G (whichever is the least) by A, and the quotient will be the efficiency of a butt and double strap joint, triple-riveted, as shown in Fig. 38.

$T.S.$ = 55,000 lb.
t = $\frac{3}{8}$ in. = 0.375 in.
b = $\frac{5}{16}$ in. = 0.3125 in.
p = 6½ in. = 6.5 in.
d = $\frac{13}{16}$ in. = 0.8125 in.
a = 0.5185 sq. in.
s = 42,000 lb.
S = 78,000 lb.
c = 95,000 lb.

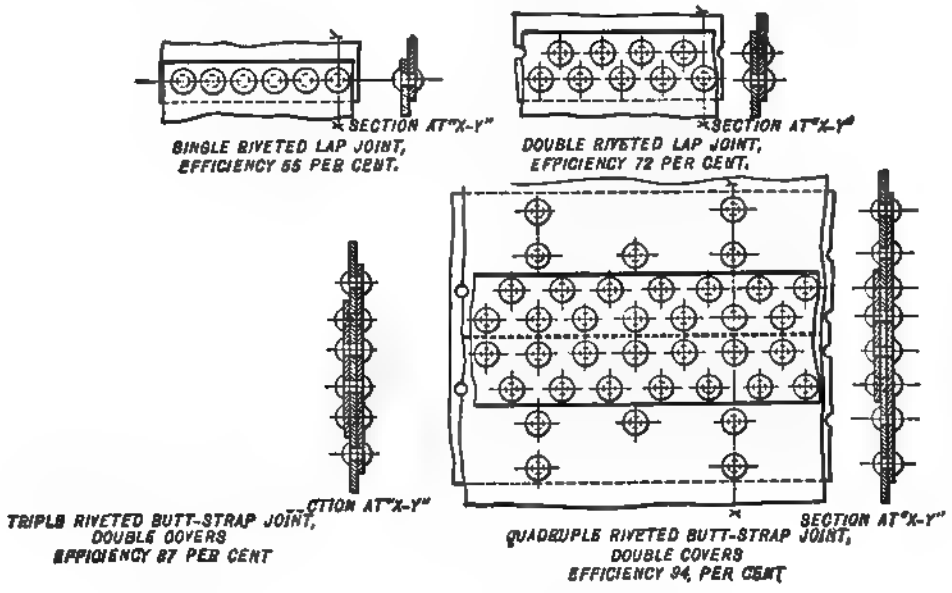

FIG. 39. TYPICAL LONGITUDINAL RIVETED BOILER JOINTS.

Boiler 78" in Diameter
88 Tubes 4" Dia.

Boiler 78" in Diameter
114 Tubes 3½" Dia.

Boiler 78" in Diameter
144 Tubes 3" Dia.

Boiler 72" in Diameter
70 Tubes 4" Dia.

Boiler 72" in Diameter
86 Tubes 3½" Dia.

Boiler 72" in Diameter
110 Tubes 3" Dia.

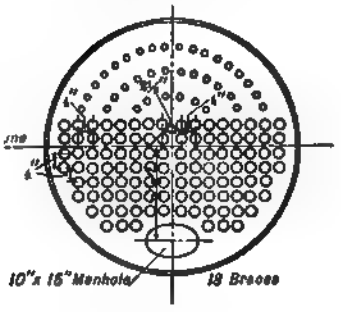

Boiler 66" in Diameter
25 Tubes 4" Dia.

Boiler 66" in Diameter
72 Tubes 3½" Dia.

Boiler 66" in Diameter
88 Tubes 3" Dia.

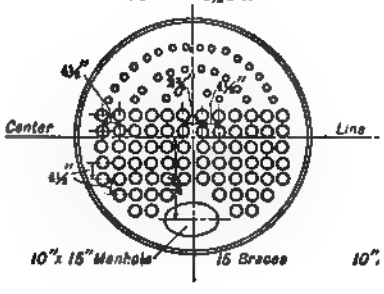

FIG. 40. TYPICAL LAYOUT OF BOILER TUBES FOR R. T. BOILERS.

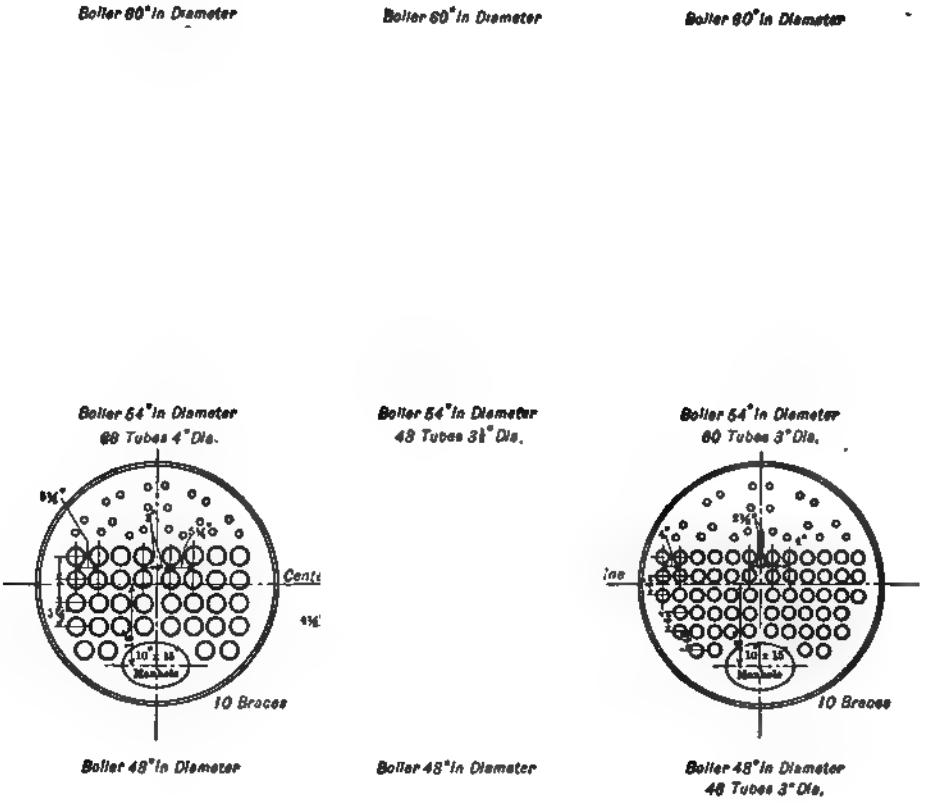

FIG. 41. TYPICAL LAYOUT OF BOILER TUBES FOR R. T. BOILERS.

Number of rivets in single shear in a unit of length of joint = 1.
Number of rivets in double shear in a unit of length of joint = 4.

$A = 6.5 \times 0.375 \times 55{,}000 = 134{,}062.$

$B = (6.5 - 0.8125)\ 0.375 \times 55{,}000 = 117{,}304.$

$C = 4 \times 78{,}000 \times 0.5185 + 1 \times 42{,}000 \times 0.5185 = 183{,}549.$

$D = (6.5 - 2 \times 0.8125)\ 0.375 \times 55{,}000 + 1 \times 42{,}000 \times 0.5185 = 122{,}323.$

$E = (6.5 - 2 \times 0.8125)\ 0.375 \times 55{,}000 + 0.8125 \times 0.3125 \times 95{,}000 = 124{,}667.$

$F = 4 \times 0.8125 \times 0.375 \times 95{,}000 + 1 \times 0.8125 \times 0.3125 \times 95{,}000 = 139{,}902$

$G = 4 \times 0.8125 \times 0.375 \times 95{,}000 + 1 \times 42{,}000 \times 0.5185 = 137{,}558.$

$$\frac{117{,}304\ (B)}{134{,}062\ (A)} = 0.875 = \text{efficiency of joint.}$$

TABLE 25

LAP JOINTS

Thick. of Plate, Inches	Diam. of Rivet, Inches	Center of Hole to Edge of Plate, Inches	Single Riveted			Double Riveted				
			Pitch, Inches	Lap, Inches	Efficiency of Plate, Per Cent	Diam. of Rivet, Inches	Pitch, Inches	Lap, Inches	Between Rows, Inches	Efficiency of Plate, Per Cent
1/4	11/16	1 1/16	1 3/4	2 1/4	57.1	11/16	2 3/4	3 5/16	1 11/16	72.7
5/16	13/16	1 1/8	1 7/8	2 7/16	56.6	13/16	2 15/16	4 5/16	2 3/16	72.8
3/8	7/8	1 3/16	2	2 5/8	56.2	7/8	3 1/16	5	2 5/16	72.0
7/16	15/16	1 5/16	2 1/8	2 13/16	55.8	15/16	3 1/4	5	2 5/16	71.1
1/2	1	1 3/8	2 1/4	3	55.5	1	3 5/16	5 5/16	2 5/16	70.8
9/16	1 1/16	1 7/16	2 5/16	3 3/16	56.4	1 1/16	3 1/2	5 5/16	2 1/4	71.4
5/8	1 1/16	1 1/2	2 3/16	3 1/16	54.0	1 1/16	3 5/8	5 5/16	2 1/4	70.6

TABLE 26

TRIPLE RIVETED BUTT STRAP JOINT

Thickness of Plate, Inches	Diam. of Rivet, Inches	Pitch of Rivets in Inches	Width of Outside Butt Strap	Width of Inside Butt Strap	Thickness of Cover Straps	Vertical or Trans. Pitch	Edge of Butt Strap to Center of Rivets	Efficiency of Plate Per Cent
1/4	11/16	3 1/8 x 6 1/4	9 1/4	14	1/4	2 1/8	1 1/4	88
5/16	13/16	3 1/4 x 6 1/2	9 1/2	14	1/4	2 1/8	1 1/4	88.5
3/8	7/8	3 3/8 x 6 3/4	9 1/2	14 1/4	5/16	2 3/16	1 5/16	87.9
7/16	15/16	3 1/2 x 7	9 1/2	14 1/4	5/16	2 3/16	1 5/16	88.4
1/2	1	3 5/8 x 7 1/4	9 1/2	15 1/2	3/8	2 1/4	1 3/8	87.9
9/16	1 1/16	3 3/4 x 7 1/2	10 1/8	15 5/8	11/16	2 1/4	1 11/16	87.5
5/8	1 1/16	3 7/8 x 7 3/4	10 1/8	15 5/8	7/16	2 1/4	1 11/16	87.8

TABLE 27

QUADRUPLE RIVETED BUTT STRAP JOINT

5/16	13/16	7 1/4 x 14 1/2	9 1/2	20 5/8	5/16	2 3/16	1 5/16	94.4
3/8	7/8	7 3/8 x 14 3/4	9 1/4	20 5/8	5/16	2 3/16	1 5/16	94.5
7/16	15/16	7 1/2 x 15	9 3/4	22	3/8	2 1/4	1 3/8	94.2
1/2	1 1/16	8 x 16	10 1/8	22 5/8	11/16	2 1/4	1 11/16	94.1
1/2	1 1/16	8 x 16	10 1/8	22 3/4	7/16	2 1/4	1 11/16	94.1

TABLE 28

LAP-WELDED STEEL OR CHARCOAL IRON BOILER TUBES

Table of Standard Dimensions

Diameter		Nom. Thickness, In.	Nearest B Wire Gage No.	Circumference		Transverse Areas			Length of Tube per Sq. Ft. of		Nom. Wgt. per Ft. Lb.
External, Inches	Internal, In.			External, Inches	Internal, Inches	External, Sq. In.	Internal, Sq. In.	Metal, Sq. In.	External Surface, Feet	Internal Surface, Feet	
1	0.810	0.095	13	3.142	2.545	0.785	0.515	0.270	3.819	4.715	0.90
1¼	1.060	.095	13	3.927	3.330	1.227	.882	.344	3.056	3.603	1.15
1½	1.310	.095	13	4.712	4.115	1.767	1.347	.419	2.547	2.916	1.40
1¾	1.560	.095	13	5.498	4.901	2.405	1.911	.494	2.183	2.448	1.66
2	1.810	.095	13	6.283	5.686	3.142	2.573	.569	1.909	2.110	1.91
2¼	2.060	.095	13	7.069	6.472	3.976	3.333	.643	1.698	1.854	2.16
2½	2.282	.109	12	7.854	7.169	4.909	4.090	.819	1.528	1.674	2.75
2¾	2.532	.109	12	8.639	7.954	5.940	5.035	.905	1.389	1.509	3.04
3	2.782	.109	12	9.425	8.740	7.069	6.079	.990	1.273	1.373	3.33
3¼	3.010	.120	11	10.210	9.456	8.296	7.116	1.180	1.175	1.269	3.96
3½	3.260	.120	11	10.996	10.242	9.621	8.347	1.274	1.091	1.172	4.28
3¾	3.510	.120	11	11.781	11.027	11.045	9.676	1.369	1.018	1.088	4.60
4	3.732	.134	10	12.566	11.724	12.566	10.939	1.627	0.955	1.024	5.47
4½	4.232	.134	10	14.137	13.295	15.904	14.066	1.838	.849	0.902	6.17
5	4.704	.148	9	15.708	14.778	19.635	17.379	2.256	.764	.812	7.58

CHAPTER V

MECHANICAL STOKERS

In all types of mechanical stokers the coal is fed to the fire automatically from a hopper placed, with practically all types of stokers, in front of the boiler. Unless, however, the coal is automatically fed to the stoker hopper from overhead storage and the ash removed automatically there is no considerable saving in labor with a mechanical stoker installation. Examples of modern stoker installations will be found in the Chapter on "Arrangement of Steam Power Plants."

The mechanical stokers permit the use of cheap fuels with good economy and when properly installed give practically smokeless combustion and are frequently installed for this reason, regardless of other considerations.

The smokeless combustion feature is due to the more even and continuous firing than is obtained with the intermittent firing of hand-fired furnaces.

There is a tendency with all types of stokers to cause the loss of some fuel by sifting through the grate into the ash pit. Suitable arrangements, however, may be made to recover or reclaim this fuel.

The amount of siftings depends upon the type of stoker and the degree of fineness of the coal. With bituminous slack, the amount sifting through a chain-grate stoker frequently amounts to 10 per cent or over, and would represent a considerable loss unless recovered.

If run of mine bituminous coal is to be used, a coal crusher is an essential part of the equipment when stokers are to be used.

"Many of the successful stokers of to-day are utilizing a forced draft for their operation. At one time it was assumed that this class of stokers did away with the necessity of a stack, except for carrying off the gases of combustion. As combustion rates increased, however, and it was necessary to supply more and more blast, it became evident that, from the standpoint of protection to furnace brickwork, a draft suction was necessary as well as a blast. In view of the enormous heat now developed in stoker-fired furnaces and the great weight of the gas passing over the boiler-heating surfaces, it is now generally accepted that some means must be provided, whether by natural or induced draft, to remove these gases from the furnace promptly in order to prevent a 'soaking up' action of the heat by the furnace brickwork. To assure such removal, the means provided should be such as to give a draft suction throughout all parts of the setting under any conditions of service."

With hand-fired boilers, one fireman can take care of the coal and ashes for approximately 300 to 400 boiler horsepower. This assumes that the distance from the coal pile to boilers is not over 100 feet and that he fires direct from the truck or barrow.

If the arrangement is such that the coal must be handled more than once, a fireman and helper will be required for each battery of 500 boiler horsepower. With a complete equipment of automatic coal and ash-handling machinery in conjunction with automatic stokers, one fireman can take care of four batteries of 500 boiler horsepower units.

The following data were compiled by *R. T. Hale* from the reports made by four hundred members of the *Steam Users' Association* of New England:

"Under average conditions, one man in addition to a night man can run an engine and fire up to ten tons of coal per week.

"For thirty tons it requires an engineer, one day and one night man." The capacity of such a plant would be approximately 200 horsepower.

"For a 500 horsepower plant it would require an engineer, two day men and one night man."

From an investigation of 600 small plants the average cost of handling coal was 48 cents per ton, with a maximum of 71 cents and a minimum of 26 cents per ton.

When coal was moved by wheelbarrow the cost was 1.6 cents per ton per yard for the first five yards and about 0.1 cent per ton for each additional yard.

Classification of Stokers. Mechanical stokers are of three general types: (1) overfeed, (2) underfeed, (3) traveling or chain grate.

Overfeed Stokers in general may be divided into two classes, the distinction being in the direction in which the coal is fed relative to the furnaces. In one class the coal is fed into hoppers at the front end of the furnace on to grates with an inclination downward toward the rear of

FIG. 1. THE RONEY OVERFEED STOKER.

FIG. 2. THE JONES UNDERFEED STOKER.

about 45 degrees. These grates are reciprocated, being made to take alternately level and inclined positions, and this motion gradually carries the fuel as it is burned toward the rear and bottom of the furnace. At the bottom of the grates flat dumping sections are supplied for completing the combustion and for cleaning. The fuel is partly burned or coked on the upper portion of the grates, the volatile gases driven off in this process for a perfect action being ignited and burned in their passage over the bed of burning carbon lower on the grates or on becoming mixed with the hot gases in the furnace chamber. In the second class the fuel is fed from the

sides of the furnace for its full depth from front to rear on to grates inclined toward the center of the furnace. It is moved by rocking bars and is gradually carried to the bottom and center of the furnace as combustion advances. Here some type of a so-called clinker-breaker removes the refuse.

The *Roney, Wilkinson, Acme, Murphy* and *Detroit* are examples of this class.

FIG. 3. COMPLETE INSTALLATION OF THE JONES STOKER SHOWING FAN, AIR DUCTS AND STEAM OPERATING VALVES.

Underfeed Stokers are either horizontal or inclined. The fuel is fed from underneath, either continuously by a screw or intermittently by plungers. The principle upon which these stokers base their claims for efficiency and smokelessness is that the green fuel is fed under the coked and burning coal, the volatile gases from this fresh fuel being heated and ignited in their passage through the hottest portion of the fire on the top. In the horizontal classes of underfeed stokers, the action of a screw carries the fuel back through a retort, from which it passes upward as the fuel above is consumed, the ash being finally deposited on dead plates on either side of the retort, from which it can be removed. In the inclined class, the refuse is carried downward to the rear of the furnace where there are dumping plates, as in some of the overfeed types.

Underfeed stokers are ordinarily operated with a forced blast, this in some cases being operated by the same mechanism as the stoker drive, thus automatically meeting the requirements of various combustion rates.

PLAN.

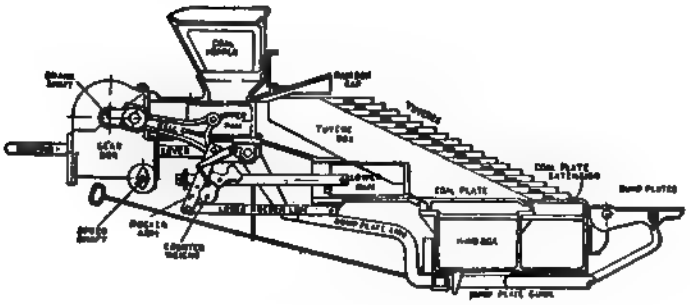

SIDE VIEW.

END VIEW.

FIG. 4. THE TAYLOR STOKER.

The *Jones, American, Combustion Engineering Co.* Type E, *Taylor* and *Westinghouse* are examples of this class.

Traveling or Chain Grates are of the class best illustrated by chain-grate stokers. As implied by the name, these consist of endless grates composed of short sections of bars, passing over sprockets at the front and rear of the furnace. Coal is fed by gravity on to the forward end of the

FIG. 5. THE GREEN CHAIN-GRATE STOKER.

grates through suitable hoppers, is ignited under ignition arches, and is carried with the grate toward the rear of the furnace as its combustion progresses. When operated properly, the combustion is completed as the fire reaches the end of the grate and the refuse is carried over this rear end by the grate in making the turn over the rear sprocket. In some cases auxiliary dumping grates at the rear of the chain grates are used with success.

Chain-grate stokers in general produce less smoke than either overfeed or underfeed types, due to the fact that there are no cleaning periods necessary. Such periods occur with the latter types of stokers at intervals, depending upon the character of the fuel used and the rate combustion. With chain-grate stokers the cleaning is continuous and automatic, and no periods occur when smoke will necessarily be produced.

In the earlier forms, chain grates had an objectionable feature in that the admission of large amounts of excess air at the rear of the furnace through the grates was possible. This objection has been largely overcome in recent models by the use of some such device as the bridge-wall water-box and suitable dampers. A distinct advantage of chain grates over other types is that

they can be withdrawn from the furnace for inspection or repairs without interfering in any way with the boiler setting.

This class of stoker is particularly successful in burning low grades of coal running high in ash and volatile matter which can only be burned with difficulty on the other types.

The *B. & W.*, *Green* and *Duluth* are examples of this class of stoker.

Cost of Mechanical Stokers. The following costs are based on bids received during 1916 for four stokers to serve four 500-horsepower water-tube boilers, natural draft:

Cost per rated boiler horsepower..... $2.90 to $3.25

CHAPTER VI

SUPERHEATERS AND ECONOMIZERS

SUPERHEATERS

Experience has demonstrated, particularly with steam turbines, that a moderate degree of superheat (from 100 to 200 degs. F.) leads to economy and this has become standard practice in steam-turbine-driven plants. The per cent reduction in the water rate of turbines due to various degrees of superheat is given in the Chapter on "Steam Turbines."

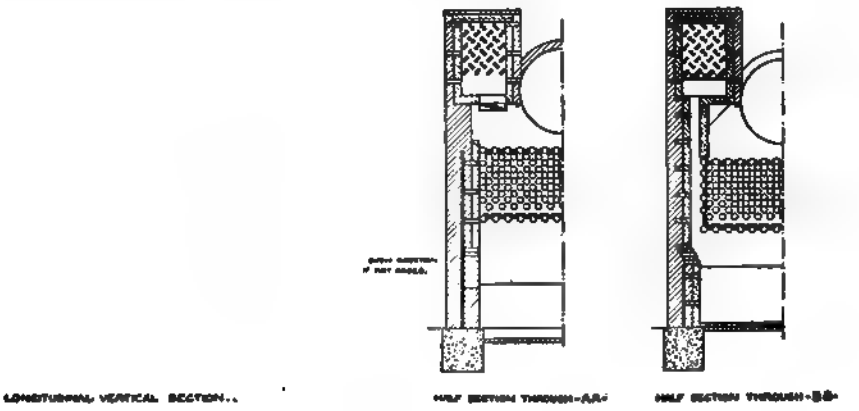

FIG. 1. HEINE BOILER WITH SUPERHEATER.

With a properly designed superheater, the increase in the fuel consumption necessary to produce a given weight of steam is approximately as follows:

Degree of Superheat, Degrees F.	Added Fuel Per Cent
50	3 1
75	4.4
100	5 7
150	8.2
200	10 6

The superheating tube surface is ordinarily placed within the boiler setting in such a way that the products of combustion for generating saturated steam are also utilized for superheating the steam. See Figs. 24, 25, 26 and 29 in the Chapter on "Boilers," etc.

Amount of Superheating Surface. The amount of superheating surface necessary to give the degree of superheat desired depends primarily on the temperature of the gas in contact with the superheating surface, the conductivity of the tubes and the velocity of the steam and gases through and over the surface. The average temperature of the gases in contact with the superheater tubes will depend on the location. The following data may be used for proportioning

superheating surface located inside the boiler setting, for superheats, 100 to 150 degs. and 135-lb. gage, using mild steel tubes:

Location	Square Feet per Boiler Horsepower
In furnace	0.20 to 0.25
At end of first pass	2.0 to 2.5
At end of heating surface	3.0 to 4.0

The installation of a superheater causes an additional draft loss of approximately 0.15 in. water when boiler is operated at 150 per cent rating.

FIG. 2. THE HEINE SUPERHEATER.

Net Saving Due to Superheating. Assume the following data: Initial steam pressure, 150 lb. absolute; final temperature of feed water, 200° F.; water rate of turbine with saturated steam, 16 lb. per kw.-hour.

The heat required to generate 1 lb. of steam for this condition is 864.9 + (358.5 − 200) = 1023.4 B.t.u.

Assume that the steam is superheated 120° and that the water rate of the turbine will be reduced 1 per cent for each 12 degs. of superheat.

The additional heat required per lb. of steam is $0.55 \times 120 = 77$ B.t.u. The new water rate of the turbine is $16 - (0.10 \times 16) = 14.4$ lb. per kw.-hour.

Using saturated steam, the heat input required is $1023.4 \times 16 = 16{,}374.4$ B.t.u. per kw.-hour.

Using superheated steam, the heat input required is $1100.4 \times 14.4 = 15{,}845.8$ B.t.u. per kw.-hour. This gives a difference of 529 B.t.u. in favor of superheating or a saving of fuel of $\frac{529}{16{,}374} = 0.032$ or 3.2 per cent.

ECONOMIZERS

An economizer is a device for heating the feed water by means of the waste flue gases. They are usually made up of vertical rows of 4-in. cast-iron tubes, approximately 9 ft. in length, attached to cross headers at top and bottom, the whole being enclosed by either a sheet-iron or brick casing (Fig. 3).

The feed water enters the economizer at the end farthest from the boiler and flows in the opposite direction to the gases (counter flow). Each tube is provided with a scraper, which is operated from the outside to remove the accumulation of soot from the tubes in order that the heat-transmission efficiency may not be impaired. A by-pass around the economizers should always be provided in order that they may be cut out of service for repairs without interfering with the operation of the boilers.

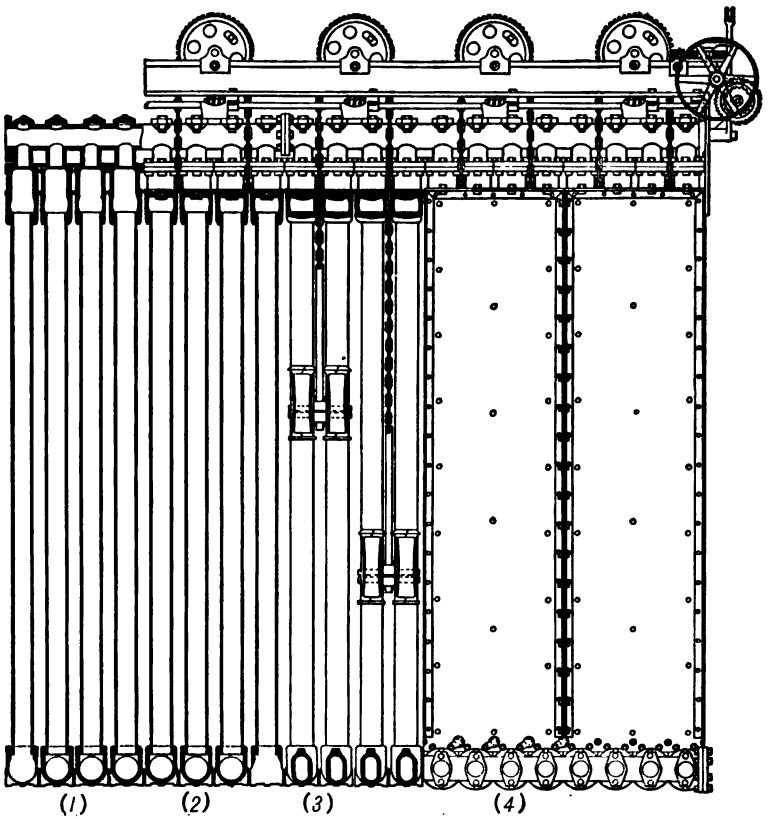

FIG. 3. GREEN FUEL ECONOMIZER.

Longitudinal Elevation and Section of *Green's* Economizer: (1) Section in Plane of Top Access Branch Pipe; (2) Section through Pipes and Hand-Hole Lids; (3) Section between Pipes and (4) Front Elevation with Sectional Covering in Place.

The saving effected by the installation of an economizer will depend upon the initial temperature of the feed water entering the economizer and the temperature of the flue gases. The higher the rate of evaporation, the higher will be the temperature of the flue gases and attendant loss, consequently the saving will be greatest with boilers running overloaded.

The percentage of saving may be calculated in the same manner as given for feed-water heaters. (See Table 1, Chapter on "Feed-Water Heaters.") The percentage of saving due to the economizer will be less in plants which have feed-water heaters.

The temperatures of the gases in the furnace and the several passes over the tubes shown in Fig. 4 were taken from a test on a water-tube boiler containing 6000 square feet of surface arranged in 14 rows of 18-ft. tubes, each 4 in. in diameter. The temperatures were obtained by means of

an electrical pyrometer when operating the boiler at about nominal load, and show that the first five rows in the first pass absorbed 55 per cent of all the heat recovered, and that the second and third passes abstracted less than 16 per cent of the heat absorbed by the boiler.

Tests made on another boiler gave the relations almost identical as shown in Fig. 5.

Obviously, it does not pay to reduce the temperature of the flue gases below 600 or 700 degrees by means of the boiler surface alone. But, on the other hand, to throw the gases away at this temperature involves a loss of 25 to 40 per cent of the total heating value of the fuel.

The remedy is to substitute, for the additional boiler surface, economizer surface, which,

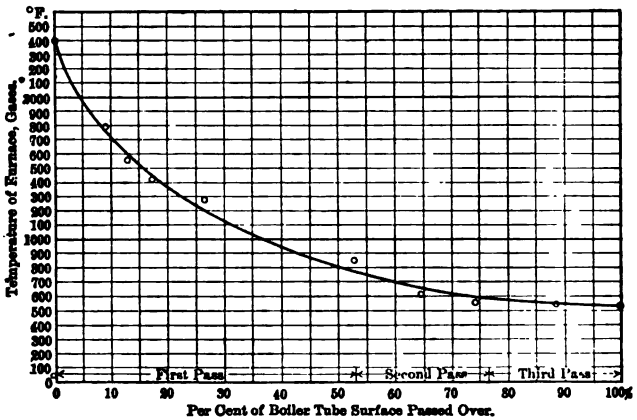

FIG. 4. CURVE OF TEMPERATURE DROP THROUGH PASSES OF BOILER.

because of the lower temperature of its contents, and consequently greater temperature difference between the two sides of the heating surface, absorbs heat more rapidly than does the surface in the last pass of the boiler. Moreover, the fixed charges upon the economizer surface are less, square foot for square foot, and it is therefore able to show much higher returns upon the investment than would additional boiler surface.

Increase in Temperature of Feed Water Due to the Use of Economizer.

Let t_1 = initial temperature of feed water degs. F. entering economizer.

t_2 = final temperature of feed water degs. F. leaving economizer.

T_1 = initial temperature of flue gas degs. F.

T_2 = final temperature of flue gas degs. F.

x = rise in temperature of feed water $(t_2 - t_1)$.

D = algebraic mean temperature difference between feed water and flue gas

$$= \frac{(T_1 - t_2) + (T_2 - t_1)}{2}.$$

w = pounds of feed water per boiler horsepower-hour. (Approx. 30.)

W = weight of flue gases per boiler horsepower-hour, pounds. (Approx. coal per b.hp.-hour × 20.)

c = specific heat of flue gas. (Approx. 0.20.)

$w\,x$ = B.t.u. absorbed by feed water per b.hp.-hour.

$c\,W\,(T_1 - T_2)$ = B.t.u. given up by flue gas per b.hp.-hour.

Then $T_1 - T_2 = \dfrac{w\,x}{c\,W}$,

and
$$D = T_1 - t_1 - x\,\frac{c\,W + w}{2\,c\,W} \quad . \quad . \quad . \quad . \quad . \quad . \quad . \quad . \quad . \quad . \quad . \quad . \quad . \quad . \quad . \quad . \quad (1)$$

FIG. 5. DIAGRAM ILLUSTRATING PATH AND TEMPERATURE DROP OF GASES FROM GRATE TO STACK.

S = square feet of economizer surface per boiler-horsepower.
= 3.5 to 5.
U = unit heat transmission of economizer tubes or B.t.u. transmitted per sq. ft. per deg. difference in mean temperature per hour.
UDS = B.t.u. transmitted per hour per b.hp.

$$UDS = xw \therefore S = \frac{xw}{UD} \quad . \quad . \quad . \quad . \quad . \quad . \quad . \quad . \quad . \quad . \quad . \quad . \quad . \quad . \quad . \quad . \quad . \quad . \quad . \quad (2)$$

Combining equations (1) and (2)

$$x = \frac{S(T_1 - t_1)}{\frac{w}{U} + \left(\frac{w + cW}{2cW}\right)S} \quad . \quad . \quad . \quad . \quad . \quad . \quad . \quad . \quad . \quad . \quad (3)$$

Substituting $w = 30$, $c = 0.20$ and $U = 3.3$

$$x = \frac{S(T_1 - t_1)}{9.1 + \left(\frac{5w + W}{2W}\right)S} \quad . \quad . \quad . \quad . \quad . \quad . \quad . \quad . \quad . \quad . \quad (4)$$

This is the empirical formula proposed by the *Green Fuel Economizer Co.*

It is not advisable to reduce the temperature of the flue gas below 250° F. as the resulting condensation of the water vapor on the tubes, together with the sulphurous gases, produces rapid corrosion.

As usually proportioned, the temperature of gas leaving the economizer is from 250° to 325° F.

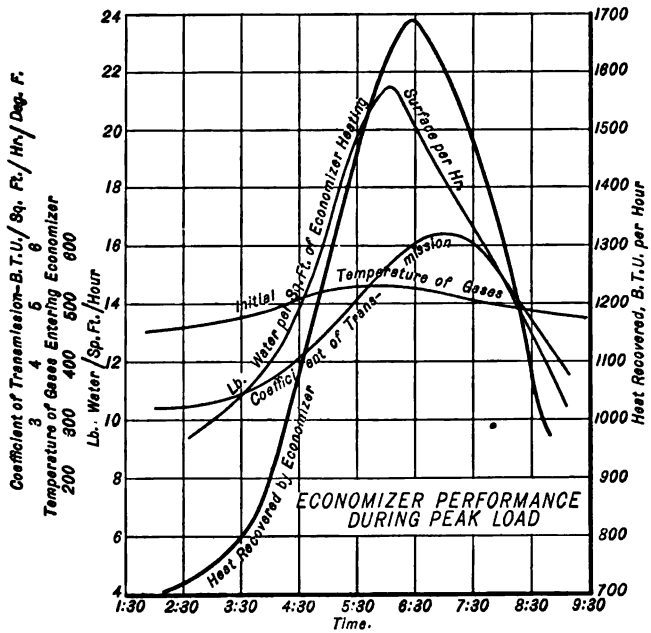

FIG. 6.

The average heat transmission of economizer tubes (U) in B.t.u. per sq. ft. per hour per degree difference in average temperature between the gases and water is given by *C. S. Dow* as follows:

TABLE 1

HEAT TRANSMISSION OF ECONOMIZER TUBES

Initial Temperature of Flue Gas	Unit Transmission (U)
300	2.25
400	2.75
500	3.00
600	3.25

The average value of U is increased as the velocity of the gas over the tubes and the velocity of water through the tubes increase, which is in accord with the results obtained with hot-blast heaters (Volume I).

Fig. 6 represents the performance of a large electric station during the period of the afternoon peak load and shows the increase in the value of U as the load on the plant is increased.

The data given in the following table are taken from the practice of one economizer company:

TABLE 2

Temperature of Entering Flue Gas	Temperature Rise of Feed Water per 100 Degrees Reduction in Temp. of Gas	Square Feet of Heating Surface per B.hp.
450° to 600°	60°	4
600° to 700°	65°	4½ to 5

TABLE 3

RESULTS FROM TESTS OF GREEN ECONOMIZERS

(Compiled from Tests *Green Fuel Economizer Co.'s* Catalog)

Number of Tests	Rate of Combustion, Lb. Dry Coal per Sq. Ft. Grate per Hour	Equivalent Evap. from and at 212° per Lb. Dry Coal	Ratio Heating Surface to Grate Area	Temperature Gases		Temperature Water		Temp. Rise
				Ent'g Econ.	Leav'g Econ.	Ent'g Econ.	Leaving Econ.	Feed Water
1	15.2	11.2	62.5	435	279	84	196	112
2	12.57	11.59	49.5	416	254	40	165.4	121.4
3	22.4	9.59	19.5	620	293	101	237	136
5a	.....	.....	....	548	295	96	200	104/
5b	.....	.....	....	603	325	93.5	203.8	110.3
6	21.86	6.79	34.2	537	326	71.2	203.4	132.2

TABLE 4

RESULTS FROM TESTS OF STURTEVANT ECONOMIZERS

(Compiled from *B. F. Sturtevant Co.*'s Catalog)

Number of Test	Temperature, Gases		Temperature, Water		Temperature Rise, Feed Water
	Entering Economizer	Leaving Economizer	Entering Economizer	Leaving Economizer	
1	650	275	180	340	160
2	575	290	160	320	160
3	470	280	130	260	130
4	500	240	110	230	120
5	460	200	90	230	140
6	440	220	120	236	116
7	525	225	180	320	140

Example. Determine the final temperature of the feed water in a steam-turbine-driven plant of 1000-kw. capacity.

Water rate of main unit 20 lb. per kw.-hour. Steam-driven auxiliaries use 10 per cent of the steam required for main unit. Jet type condenser used, vacuum maintained 28″ hg., corresponding temperature 101° F. Open type heater using exhaust steam from the auxiliaries and feed water drawn from the condenser hot well.

Feed water leaving open heater to be passed through an economizer.

Assume a "terminal difference" for the final temperature of condensing water of 10° F. Temperature of hot well and initial temperature of feed water, $101 - 10 = 91°$ F.

From the data given in the Chapter on "Feed-Water Heaters," it is readily calculated that for an assumed radiation of 10 per cent in the open heater that the temperature of the feed water leaving the heater will be about 199° F. This is the initial temperature of the feed water entering the economizer.

Assuming a combined efficiency of 0.60 for the boiler plant and a calorific value of 13,000 B.t.u. per lb. for the fuel, 4.3 lb. of coal are required per b.hp.-hour. If 20 lb. of air are used per lb. of coal, the weight of flue gases per b.hp. per hour is: $W = 20 \times 4.3 = 86$ lb.

Assume, $w = 30$, $c = 0.20$, $S = 3.5$, $U = 3.3$, $T_1 = 550°$ F., and $t_1 = 199$.

Substituting the above values in (4),

$$x = \frac{3.5\,(550 - 199)}{9.1 + \left(\frac{5 \times 30 + 86}{2 \times 86}\right) \times 3.5} = 88 \text{ degs. rise in temperature of feed water in economizer.}$$

$\therefore\ t_2 = t_1 + x = 287°$ F. temperature of water entering the boilers.

The final temperature of the flue gas leaving the economizer may be approximated by first solving for D in equation 2:

$$D = \frac{x\,w}{U\,S} = \frac{88 \times 30}{3.3 \times 3.5} = 228.$$

$$228 = \frac{550 - 287 + T_2 - 199}{2}, \text{ from which } T_2 = 392° \text{ F.}$$

Loss of Draft Through Economizers. Tests No. 5*a* and 5*b*, Table 3, were made on the Manhattan Power Station, *Interborough Rapid Transit Company*, New York City.

The economizer in question contained 512 tubes 10′ 0″ long, 4-9/16″ outside diameter, economizer heating surface per rated b.hp., 3.25 sq. ft. The clear area through economizer being nearly 3 sq. in. per b.hp., which is somewhat greater than the standard practice. The flue area is slightly greater than this.

The loss of draft through economizer for test 5*a*, when the boilers were being operated at 6 per cent below rating, was 0.16″ water, and 0.23″ water for test 5*b*, when the boilers were 13 per cent overloaded.

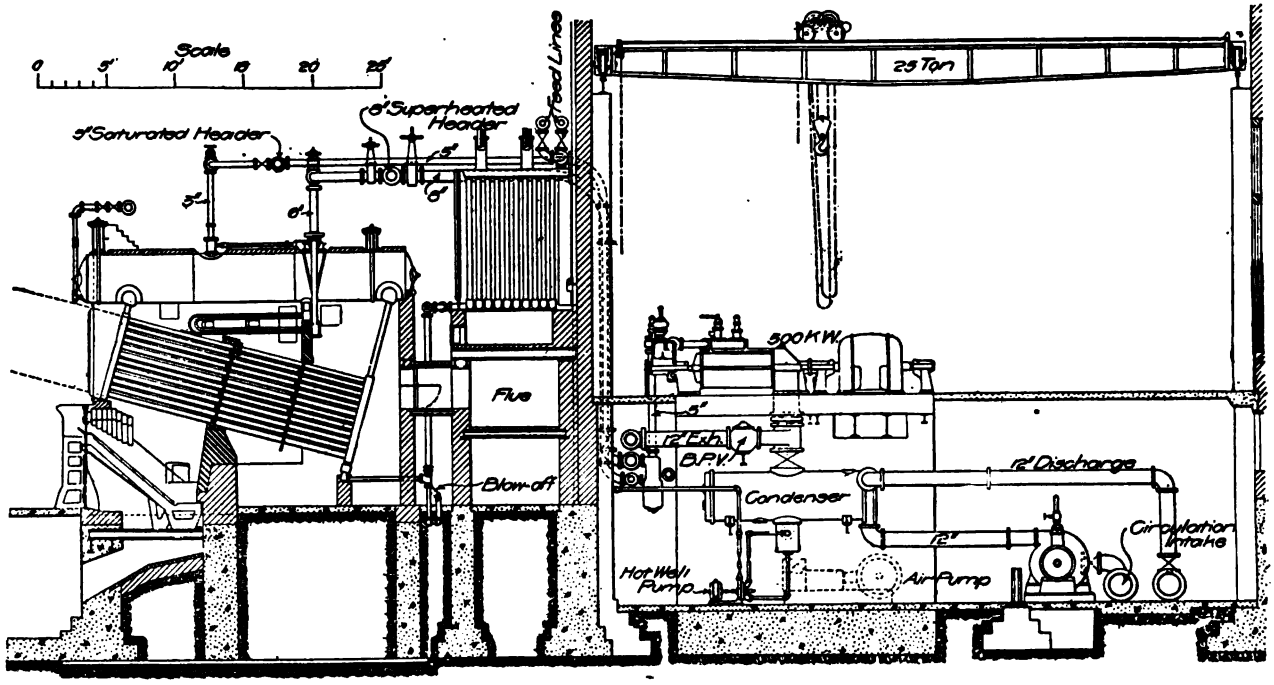

Power Plant of Gulfport & Mississippi Traction Co., equipped with Green's Economizers

FIG. 7.

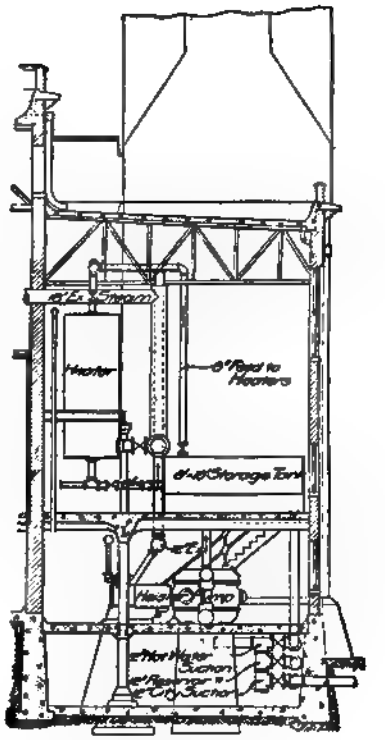

Cross Section at A-A

Section thro. Plan Room at B-B

Fig. 8.

The following results were obtained at the *Laclede Power Co.'s* Plant, St. Louis. The height of stack refers to the height *above* the economizers.

TABLE 5

	Temperature Flue Gases, Degrees Fahrenheit	Draft, Inches
Base of 150-foot stack	300	1.25
Breeching between boiler and economizer	485	0.75
End of intermediate baffle	770	0.50
Combustion chamber (estimated)	1,600	0.37
Furnace (estimated)	2,100	0.25

TABLE 6

GENERAL DIMENSIONS OF ECONOMIZERS

Height over gearing 13′ 5¼″. Height over section 10′ 2¼″. Outside diameter of tubes 4″, heating surface per tube 12 square feet.

Number Tubes Wide	Number Rows Deep	Over all	Dimensions Inside Walls		With Two Side Dampers	Area Between Tubes			In Water	Surface	Surface
4	8	4′ 10″	3′ 4″	4′ 1″	4′ 10″	16.6	23.85	31.1	1,984	384	48
6	8	4 10	4 8	5 5	6 2	21.85	29.1	36 35	2,976	576	72
8	12	7 3	6 0	6 9	7 6	27.	34 25	41 5	5,952	1,152	96
10	16	9 8	7 4	8 1	8 10	32 25	39.5	46 75	9,920	1,920	120
12	20	12 1	8 8	9 6	10 8	39.25	44.75	51.5	14,880	2,880	144

In practice, economizers are frequently made 60 or more rows deep to obtain the necessary heating surface. The over-all length of the economizer may be obtained for any even number of rows deep by allowing 7¼ in. per row.

Example. Suppose it be desired to install an economizer for each battery of 300 hp. boilers in the rear of the boilers, the width of the battery setting being 12′ 8″.

Based on 4 sq. ft. of economizer tube surface per b.hp., there will be required $4 \times 2 \times 300 = 2400$ sq. ft. of tube surface per battery. If the economizer is made 10 tubes wide the heating surface per row is 120, the number of rows required is therefore $2400 / 120 = 20$; the length of the economizer being $20 \times 7\frac{1}{4} = 145$ in. or 12′ 1″.

CHAPTER VII

CHIMNEYS FOR POWER BOILERS

THEORY, DESIGN AND CONSTRUCTION

Draft Produced by a Stack or Chimney. The "head" available, for overcoming all frictional resistance to the gas flow and create the final velocity of discharge when produced by a chimney, is calculated by taking the difference between the weight of the column of hot gases in the chimney and a column of the outside air of equivalent height.

Let L = the height of top of chimney above the grate measured in ft.
D = the diameter of chimney in ft.
d = density of the outside air (wt. per cu. ft.).
d_c = density of the chimney gases (wt. per cu. ft.).
H = the total head produced by the chimney measured in inches of water.
K = density of the water in the manometer.
= 62.4 for a temperature of 70° F.

$$\frac{H\,K}{12} = A\,(d - d_c).$$

Then $$H = L \times \frac{12}{K} \times (d - d_c) = \frac{L}{5.2}\,(d - d_c).$$

From the law of perfect gases, $P\,V = M\,R\,T$, in which P is the absolute pressure in lb. per sq. ft. V = volume in cu. ft. M = weight in lb. R = a constant = 53.35 for air. T = the absolute temperature degs. F. If $V = 1$, then M = the density or weight per cu. ft. $P = 14.7 \times 144 = 2116.8$ lb. per sq. ft. at sea level.

Then $$M = d = \frac{39.7}{T}.$$

If T = the temperature of the outside air and T_c = the temperature of the chimney gases, then $$d_c = \frac{39.7}{T_c}.$$

$$\therefore\ H = 7.64\,L\left(\frac{1}{T} - \frac{1}{T_c}\right) \quad . \quad . \quad . \quad . \quad . \quad . \quad . \quad . \quad . \quad . \quad (1)$$

It is usual to take approximately 0.80 of the head H when the calculations have been based on the temperature of gases leaving the boiler to allow for the cooling effect of the flue and stack. The temperature of the flue gas may be approximated from the following table taken from a publication by the *Green Fuel Economizer Co.*

TABLE 1

Pounds water evaporated from and at 212° per sq. ft. heating surface per hour	2	2.5	3	3.5	4	5	6	7	8	9	10
Square feet heating surface required per horsepower	17.3	13.8	11.5	9.8	8.6	6.8	5.8	4.9	4.3	3.8	3.5
Ratio of heating to grate surface if ½ sq. ft. of G. S. is required per hp	52	41.4	34.5	29.4	25.8	20.4	17.4	13.7	12.9	11.4	10.5
Probable temperature of chimney gases, degrees F	450	475	500	525	550	580	650	710	770	850	930

The theoretical head produced for various heights of chimney and temperature of flue gas may be read direct from the accompanying diagram Fig. 1.

Experiments conducted by *Prof. E. F. Miller* at the Massachusetts Institute of Technology on the cooling of chimney gases have shown the following results:

TABLE 2

Size and Type of Stack	Height "L"	Temperatures, Degs. F.		
		Initial	Final	Loss
3′ x 3′ square brick	102	440	362	78
3′ diameter unlined steel	100	405	329	76
16′ diameter radial brick	250	478	375	103
16′ diameter radial brick	250	360	315	45

Let h_g = loss of draft through grate, inches of water.
h_b = loss of draft through boiler, inches of water.
h_f = loss of draft through flue, inches of water.
h_c = loss of draft through chimney, inches of water.

$\frac{12\,d}{K}\frac{V^2}{2\,g}$ = the final velocity head inches of water.

Then $0.8\,H = h_g + h_b + h_f + h_c + \frac{12\,d}{K}\frac{V^2}{2\,g}$.

Loss of Draft in Flues and Chimneys or Stacks. The general form of the expression giving the loss of head measured by the height of a column (in ft.) of the medium flowing in a pipe or duct is:

$$h_x = f \times \frac{L\,R}{A} \times \frac{V^2}{2\,g} \text{ or } f \times \frac{L\,R}{A} \times \text{velocity head,}$$

in which h_x = head lost measured in feet of air or gas column.
L = length of pipe, duct or stack.
R = perimeter of pipe or duct.
$L\,R$ = area of the rubbing surface in sq. ft.
A = area of pipe or duct in sq. ft.
V = velocity of flow (average over the cross-section) in ft. per sec.
f = friction coefficient.
g = 32.16 (acceleration due to gravity) ft. per sec.^{2}
$\frac{V^2}{2\,g}$ = the velocity head.

If the head lost is stated in inches of water, then

$$h = \frac{h_x\,K}{12\,d},$$

in which h = the head lost measured in inches of water column.
K = density of the water corresponding to the temperature.
d = density of the medium flowing corresponding to its temperature.

Then

$$h = f\frac{L\,R}{A}\left(\frac{V^2}{2\,g}\,\frac{12\,d}{K}\right) \quad \ldots\ldots\ldots \quad (2)$$

For a round section $R = \pi\,D$ and $A = \frac{1}{4}\,\pi\,D^2$.

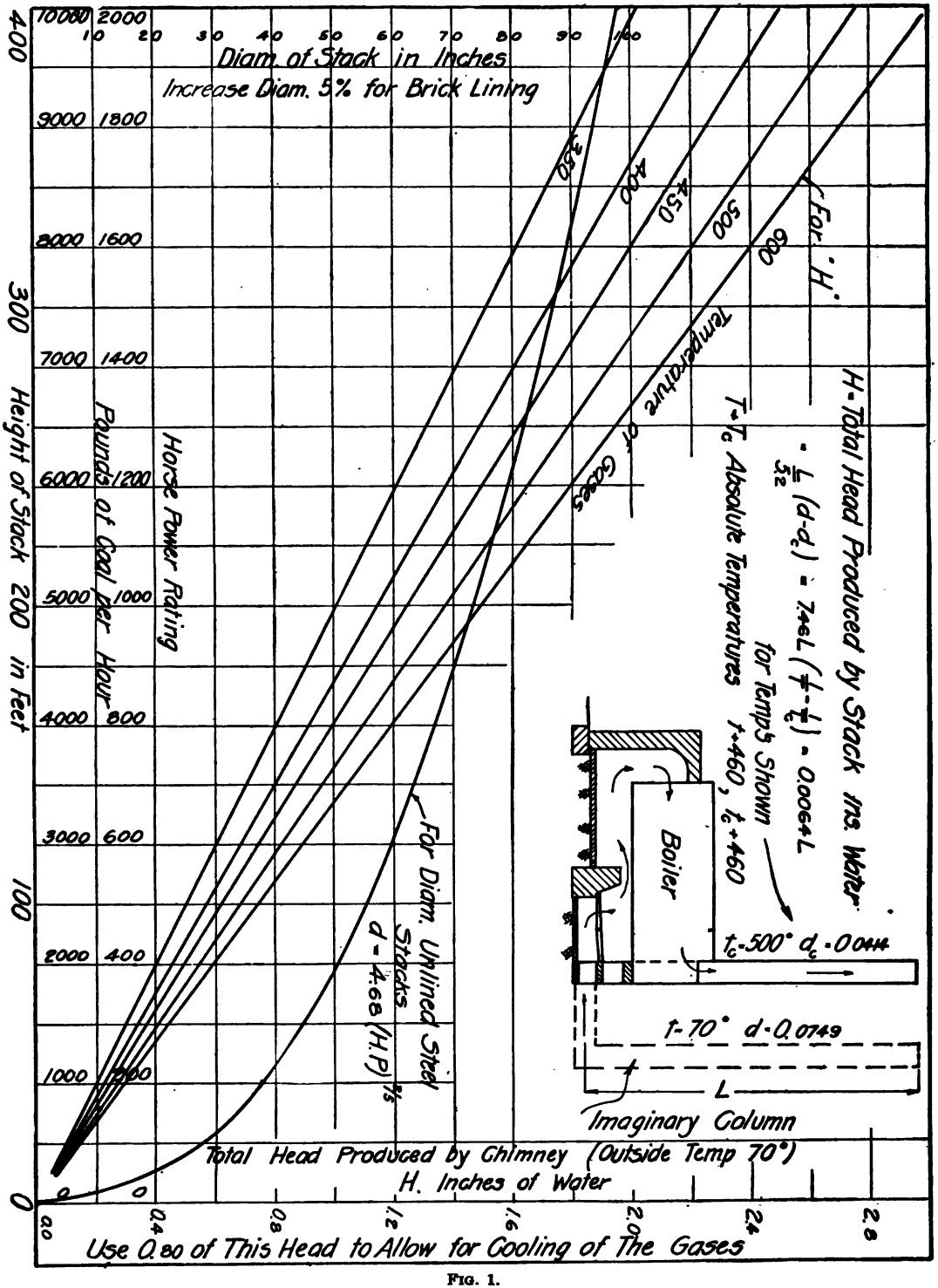
Diam. of Stack in Inches
Increase Diam. 5% for Brick Lining
Height of Stack in Feet
Pounds of Coal per Hour
Horse Power Rating
For 'H'
350
400
450
500
600
Temperature of Gases
H - Total Head Produced by Stack ins. Water
= 1/52 (d-dc) = .746L (1/T - 1/Tc) = 0.0064L
T = Tc Absolute Temperatures for Temps Shown
t+460, tc+460
Boiler
tc-500° dc-0.044
t-70° d-0.0749
L
Imaginary Column
For Diam. Uplined Steel Stacks d = 4.68 (H.P)^2/5
Total Head Produced by Chimney (Outside Temp 70°)
H. Inches of Water
Use 0.80 of This Head to Allow for Cooling of The Gases

FIG. 1.

Then

$$h = f\frac{4L}{D} \times \left(\frac{V^2}{2g}\frac{12d}{K}\right) \quad \ldots\ldots\ldots \quad (3)$$

If it is desired to use the weight of the medium flowing rather than the velocity, the following substitutions may be made in (3) for round ducts:

Q = Volume of flue gases, cu. ft. per sec.
W = Weight of flue gases, lb. per sec.

The weight of flue gas assumed in calculations is usually based on a fuel consumption of approximately 4 pounds per rated boiler horsepower at normal load and 20 pounds of air supplied per pound of coal.* The boilers are assumed to be operated at 50 per cent overload, in which event approximately 6 lb. of coal will be consumed for each *rated* boiler horsepower. The weight of flue gas per *rated* horsepower (not actual power developed) will then be 6×20 or 120 lb. per hour.

The theoretical and actual amount of air required for combustion is quite fully discussed in the Chapter on "Fuels and Combustion."

$$Q = A \times V.$$

$$= \frac{W}{d} \text{ and } V = \frac{W}{A \times d}, V^2 = \left(\frac{W}{A\,d}\right)^2 = \frac{W^2}{(0.7854\,D^2 \times d)^2}$$

$$\text{The velocity head in inches of water} = \frac{12 \times W^2 \times d}{2 \times g \times 0.7854^2 \times D^4 \times d^2 \times K} = \frac{W^2}{204 \times D^4 \times d}.$$

$$\text{Then} \qquad h = f\frac{4L}{D} \times \frac{W^2}{204 \times D^4 \times d} = 0.0196\,\frac{f\,L\,W^2}{D^5 \times d}.$$

If the temperature of the water is 70° in the manometer tube, then $K = 62.4$.

$d = 0.0749$ corresponding to 70° F. for air.
$= .049$ corresponding to 350° F. for air.
$= .0414$ corresponding to 500° F. for air.
$= .0393$ corresponding to 550° F. for air.
$= .0375$ corresponding to 600° F. for air.

Experiments by various authorities on the flow of air at practically atmospheric pressure in smooth sheet-steel ducts for velocities ranging from 15 to 30 ft. per sec. corresponding to the range of velocities as found in chimney and fan practice gave the following average friction coefficient for use in the general formula given above:

$f = 0.0035$ for $R = 8$ to 16 ft. corresponding to $D = 2.5$ to 5.

As this value corresponds to smooth steel ducts it is advisable to increase this coefficient by 25 per cent for sheet-steel ducts and unlined steel stacks in practice to allow for rough joints and surfaces and to double the coefficient for brick or concrete surfaces.

Then the practical values for use in the formula given are:

$f = 0.0035 \times 1.25 = 0.0044$ for unlined steel chimneys or flues.
$= 0.0035 \times 2. \quad = 0.007$ for brick chimneys or flues.

The head lost by friction, measured in inches of water, for the following stack temperatures using the above coefficients is:

For Steel Stacks (unlined):

$$h_c = 0.00176\,\frac{L}{D^5} \times W^2 \text{ for } 350° \text{ F., round sections.}$$

* The fuel consumption per b.hp. is based on using a fuel having a calorific value of 13,500 B.t.u. per lb., and an over-all boiler, grate and furnace efficiency of 62 per cent.

Weight of
for
The Rating Here Given is Based on 120 Lbs. of Flue Gas per Boiler Horse Power per Hour.
This Allows A 50 Percent Overload when Us-ing A Poor Grade of Coal
Rated Boiler Capacity (B.H.P.) for Stacks 18'to48' Diam. Shown by Full Lines
Rated Boiler Capacity (B.H.P.) for Stacks 54' to 120' Diam. Shown by Dotted Lines
(W) Weight of Flue Gas - Lbs. per Sec. for Velocity Head.
Use this Scale for Values Given by Dotted Lines
Velocity Head
300
270
255
240
225
210
195
180
165
150
135
120
105
90
75
60
575
45
375
30
3000
2700
2550
2400
2250
2100
1950
1800
1650
1500
1350
1200
1050
900
750
600
525
450
375
300
10.
9
8
7
6
5
4
3
2
1.5
1
1°
1.5°
2°
.01°
.015°
.02°
For Brick or Brick Lined

d Flue Gas Lbs per Sec. (W)
Velocity Head

Velocity Head - Ins. of Water

Loss of Head per 100 Ft. Ins. of Water (h_o)
Stacks Multiply Head Loss as Read by 1.7

FIG. 2.

$$= 0.0021 \frac{L}{D^5} \times W^2 \text{ for } 500° \text{ F., round sections.}$$

$$= 0.0023 \times \frac{L}{D^5} \times W^2 \text{ for } 600° \text{ F., round sections.}$$

For Brick, Brick-Lined or Concrete Stacks. Multiply by $\frac{0.007}{0.0044}$ or 1.704.

TABLE 3

HEAD LOST IN UNLINED SHEET-STEEL STACKS

Temp. 500°. 100 Ft. High

Diameter Ft.	$h_c = 0.21 \frac{W^2}{D^5}$ (inches water)	Velocity Head Inches of Water $0.12 \frac{W^2}{D^4}$
1	$0.21 W^2$	$0.12 W^2$
1½	$.0276 W^2$	$.0237 W^2$
2	$.00656 W^2$	$.0075 W^2$
2½	$.00213 W^2$	$.00307 W^2$
3	$.000864 W^2$	$.00148 W^2$
3½	$.0004 W^2$	$.0008 W^2$
4	$.000205 W^2$	$.00047 W^2$
4½	$.000114 W^2$	$.000292 W^2$
5	$.000067 W^2$	$.00019 W^2$
5½	$.000042 W^2$	$.00013 W^2$
6	$.000027 W^2$	$.000093 W^2$
7	$.0000124 W^2$	$.00005 W^2$
8	$.0000064 W^2$	$.000029 W^2$
9	$.0000035 W^2$	$.000018 W^2$
10	$.0000021 W^2$	$.000012 W^2$
12	$.00000085 W^2$	$.0000058 W^2$

The pressure loss and velocity pressure for various diameters of stacks may be read direct from the diagram, Fig. 2.

For brick, brick-lined or concrete stacks, multiply the above values of h_c by 1.704; for any other height multiply, by the height divided by 100.

The draft losses through the grate and boiler may be approximated from the data given by the accompanying table.

The following table is based on the values as read from chart, Fig. 3, in the Chapter on "Boilers," etc.:

TABLE 4

INTENSITY OF DRAFT BETWEEN FURNACE AND ASH PIT TO BURN COAL

Kind of Coal	Combustion Rate "R" Lb. Dry Coal per Sq. Ft. Grate per Hour						
	15	20	25	30	35	40	45
	Force of Draft Inches Water						
Ill., Ind., Kan. Bituminous	0.14	0.20	0.26	0.33	0.40	0.48	0.57
Ala., Ky., Pa., Tenn. Bituminous	.16	.23	.31	.40	.49	.60	.72
Md., Pa., Va., W. Va. Semi-Bituminous	.18	.26	.35	.45	.57	.71	.87
Anthracite Pea	.30	.45	.64	.88	1.23	...	...
Anthracite Buckwheat No. 1	.43	.68	1.00	1.50	....	...	...

TABLE 5

LOSS OF DRAFT IN BOILERS

Type of Boiler	Inches Water
Horizontal return tubular	0.25 to 0.30
Babcock & Wilcox	.20 to .35
Heine	.49
Stirling	.51
Wickes vertical tubular	.43
Cahall vertical tubular	.45

The loss of draft between the grate or furnace and a point just beyond the damper box of a boiler is about as follows when the boilers are operated at normal rating. Bituminous coal burned at the rate of 25 to 30 lb. per square foot of grate surface per hour.

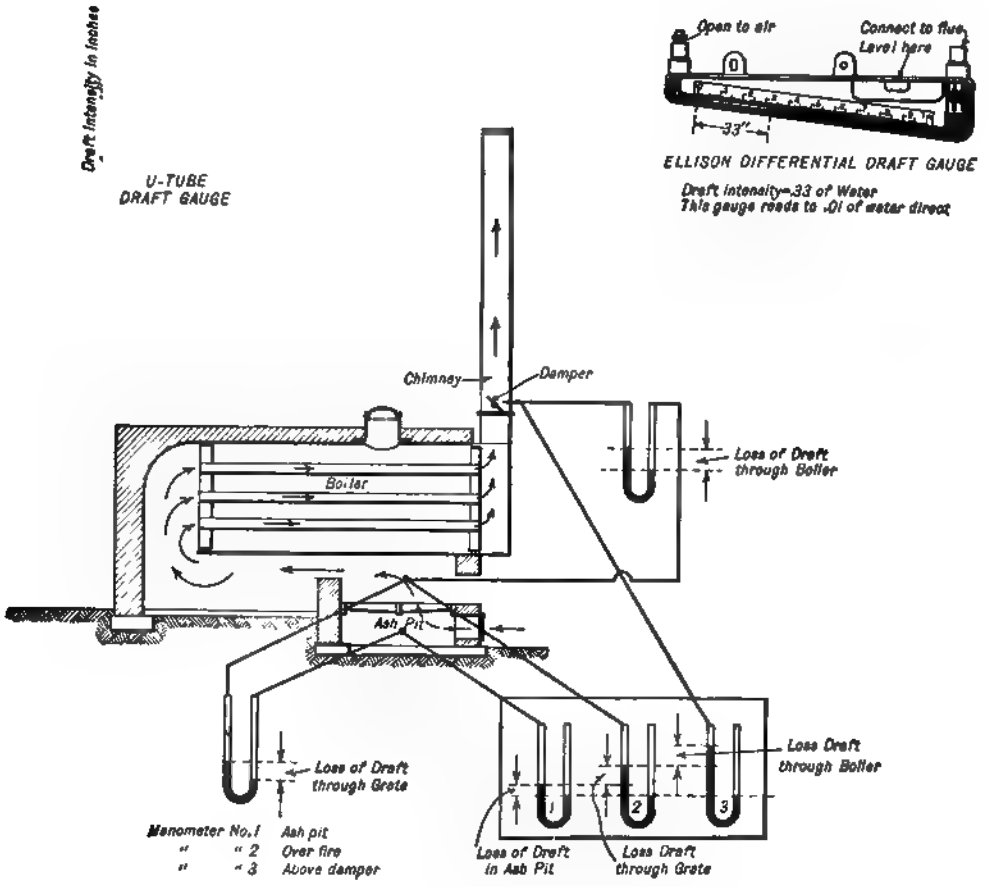

FIG. 3. ILLUSTRATING DRAFT LOSSES IN A BOILER PLANT.

The loss of draft through the boiler will depend largely upon the method of baffling employed and increases with the per cent rating at which the boiler is operated. The above figures should be increased by approximately 55 per cent when the boiler is operated at 150 per cent of its rated capacity, and by 75 per cent where it is run at 200 per cent rating.

Velocity of Gases through Flue and Chimney. The customary allowable velocities of gases in chimneys when the design is based on 120 lb. of flue gas per hour per rated boiler horsepower varies from 17 ft. per sec. for a diameter of stack equal to 24″ to 31 ft. per sec. for a 72″ diameter and above. These figures correspond to a weight of 0.68 and 1.10 lb. per sq. ft. of area. The diagram (Fig. 1) gives the diameters ordinarily used for various amounts of coal burned per hour and corresponding rated horsepower. The formula that is supposed to give the most economical diameter for an unlined steel chimney or stack which is used by many engineers in this country is

$$d = 4.68 \sqrt{(Hp.)^8}$$

in which d is the diameter in inches and $Hp.$ is the rated capacity of the boilers served. The relation between the diameter and horsepower is given by the curve Fig. 1.

The velocities in the flue breeching should ordinarily not exceed 90 per cent of the above values.

The loss of draft in the flue may be approximated by means of the general formula (2) previously given, using a coefficient of friction $f = 0.0044$ for unlined sheet-steel flues and $f = 0.007$ for brick-lined flues. The loss occasioned by right-angle turns and bends may be approximated from the data given in the Chapter on "Hot Blast Heating," Volume I.

The following figures are frequently used by engineers for approximating the loss of draft in flues or breechings:

Horizontal flues, square or rectangular, 0.13 to 0.15 inches water per 100 feet. Increase these values by 50 per cent for brick-lined flues. Loss of draft, easy right angle-bends, 0.05″ water.

When economizers are to be installed, the temperature of the flue gas will be reduced to 250° to 325° and the total head (H) should be calculated on a basis of these temperatures.

The loss of draft through the economizers should not be figured less than 0.3″ water.

When a superheater is used, allow approximately 0.15 inches additional draft loss.

The turns which the flue makes in leaving the damper box of the boiler, where it enters the main flue, and at the stack should be considered and allowed for.

It is customary to make the flue or breeching approximately 10 to 15 per cent greater in area than the area at the top of the stack to which it connects, the cross-section being reduced in proportion to the volume of gas to be handled as the flue passes the boilers in succession. One prominent boiler manufacturer recommends a flue area of 35 sq. ft. per 1000 b.hp.

The following chimney formula by *William Kent* is largely used by engineers in this country.

The formula is based on the following assumption:

The friction head in the chimney is considered as equivalent to a diminution of the area by an amount equal to lining of inert gas 2″ in thickness.

If A = actual area, sq. ft.
E = effective area, sq. ft.
D = diameter, ft.
Then $E = A - 0.60 \sqrt{A}$.

The draft power of a chimney varies directly as the effective area E and as the square root of the height B.

The formula for horsepower of a chimney will take the form $Hp. = C E \sqrt{B}$, in which C is a constant. The value of C as obtained by *William Kent* from an examination of a large number of chimneys is 3.33 when 5 lb. of coal is burned per boiler horsepower per hour.

The formula for the horsepower rating of a chimney is then

$$Hp. = 3.33\ E\ \sqrt{B} = 3.33\ (A - 0.6\ \sqrt{A})\ \sqrt{B}$$

or

$$E = \frac{0.3\ Hp.}{\sqrt{B}}.$$

TABLE 6

SIZE OF CHIMNEYS FOR STEAM BOILERS

Kent's Formula

Diam. Inches	Area (A) Sq. Ft.	Effective Area $E = A - 0.6\sqrt{A}$ Sq. Ft.	Height of Chimney: 50 Ft.	60 Ft.	70 Ft.	80 Ft.	90 Ft.	100 Ft.	110 Ft.	125 Ft.	150 Ft.	175 Ft.	200 Ft.	225 Ft.	250 Ft.	300 Ft.	Equivalent Sq. Chimney Side of Sq. $\sqrt{E} + 4$ Inches
			Commercial Horsepower of Boiler *														
18	1.77	0.97	23	25	27	29	.....	.....	.....	.....	.....	.....	.....	.....	.....	.....	16
21	2.41	1.47	35	38	41	44	.....	.....	.....	.....	.....	.....	.....	.....	.....	.....	19
24	3.14	2.08	49	54	58	62	66	.....	.....	.....	.....	.....	.....	.....	.....	.....	22
27	3.98	2.78	65	72	78	83	88	.....	.....	.....	.....	.....	.....	.....	.....	.....	24
30	4.91	3.58	84	92	100	107	113	119	.....	.....	.....	.....	.....	.....	.....	.....	27
33	5.94	4.48	.....	115	125	133	141	149	156	.....	.....	.....	.....	.....	.....	.....	30
36	7.07	5.47	.....	141	152	163	173	182	191	204	.....	.....	.....	.....	.....	.....	32
39	8.30	6.57	.....	.....	183	196	208	219	229	245	.....	.....	.....	.....	.....	.....	35
42	9.62	7.76	.....	.....	216	231	245	258	271	289	316	.....	.....	.....	.....	.....	38
48	12.57	10.44	.....	.....	.....	311	330	348	365	389	426	.....	.....	.....	.....	.....	43
54	15.90	13.51	.....	.....	.....	.....	427	449	472	508	551	595	.....	.....	.....	.....	48
60	19.64	16.98	.....	.....	.....	.....	536	565	593	632	692	748	.....	.....	.....	.....	54
66	23.76	20.83	.....	.....	.....	.....	.....	694	728	776	849	918	981	.....	.....	.....	59
72	28.27	25.08	.....	.....	.....	.....	.....	835	876	934	1,028	1,105	1,181	1,253	.....	.....	64
78	33.18	29.73	.....	.....	.....	.....	.....	.....	1,088	1,107	1,212	1,310	1,400	1,485	1,565	.....	70
84	38.48	34.76	.....	.....	.....	.....	.....	.....	1,214	1,294	1,418	1,531	1,637	1,736	1,830	2,005	75
90	44.18	40.19	.....	.....	.....	.....	.....	.....	.....	1,496	1,639	1,770	1,898	2,008	2,116	2,318	80
96	50.27	46.01	.....	.....	.....	.....	.....	.....	.....	1,712	1,876	2,027	2,167	2,298	2,423	2,654	86
102	56.75	52.23	.....	.....	.....	.....	.....	.....	.....	1,944	2,130	2,300	2,459	2,609	2,750	3,012	91
108	63.62	58.33	.....	.....	.....	.....	.....	.....	.....	2,090	2,299	2,592	2,771	2,939	3,098	3,393	96
114	70.88	65.83	.....	.....	.....	.....	.....	.....	.....	.....	2,685	2,900	3,100	3,288	3,466	3,797	101
120	78.54	73.22	.....	.....	.....	.....	.....	.....	.....	.....	2,986	3,226	3,448	3,657	3,855	4,223	107
132	95.03	89.18	.....	.....	.....	.....	.....	.....	.....	.....	3,637	3,929	4,200	4,455	4,696	5,144	117
144	113.10	106.72	.....	.....	.....	.....	.....	.....	.....	.....	4,352	4,701	5,026	5,331	5,618	6,155	128

* Based on a consumption of 5 lb. of fuel per boiler horsepower. For any other rate multiply the tabular figure by the ratio of 5 to the maximum expected coal consumption per horsepower per hour.

Table 6 is based on the above formula. The *B. & W. Co.* recommend that when the fuel used is low-grade bituminous of the middle or western states that the sizes given be increased from 25 to 60 per cent, depending upon the nature of the coal and capacity desired. If the gas makes more than two turns it is advisable to increase the diameter as given by the table by one size. The height must be increased at least 30 per cent if economizers are to be used.

The above table may be applied to heating boilers, the equivalent rating in square feet of direct radiation being approximately equal to hp. rating $\times$ 100.

Example. The method of procedure in determining the dimensions of a flue or breeching and a brick chimney will be explained by the following example. The layout of the plant is shown by Fig. 4. There are three 150 hp. return tubular boilers to be served; the grate surface of each boiler is 30 sq. ft. as given by the table of dimensions for return tubular boilers. The maximum weight of flue gas per

hour per boiler horsepower will be assumed as 120 lb. The flue has two right-angle turns upon entering the flue and stack. The measured length of the flue is approximately 40 ft. The fuel assumed is Pennsylvania bituminous and the total grate area is 90 sq. ft. If 5 lb. of coal per boiler horsepower is assumed for the fuel consumption, then $3 \times 150 \times 5 / 90 = 25$ lb. per sq. ft. per hour is the rate of combustion R.

The loss of draft through the grate from the diagram Fig. 1, in the Chapter on "Power Boilers," for this rate of combustion is $h_g = 0.31$ inches water. The loss of draft through the boiler $h_b = 0.30$

FIG. 4. LAYOUT OF PLANT.

inches water. The loss through the flue will be assumed as 0.15 inches per 100 ft. and 0.05 inches for each turn; then

$$h_f = 0.15 \times \frac{40}{100} + 2 \times 0.05 = 0.16 \text{ inches.}$$

The diameter of the stack from the diagram Fig. 1 is 53″ + 5% or 54″.

The loss of head in the stack cannot be determined until a height has been assumed. Assuming

a height of 110 ft.; the loss from the diagram Fig. 2 per 100 ft. is 0.0256″ and the velocity head is 0.067″.

The loss through a brick stack is $1.10 \times 0.0256 \times 1.7 = 0.048''$.

Then $0.8\,H = 0.31 + 0.16 + 0.048 + 0.067 = 0.585''$

or $H = 0.73''$.

The total theoretical head produced by a stack having the above dimensions for a temperature of 500° F. is given by the diagram, Fig. 1, as $H = 0.75''$. This is seen to be sufficient. Height of chimney above foundation will be made 115 ft.

The standard dimensions for a radial brick stack of this size will be found in Table 14. The area of this stack is 15.9 sq. ft. The area of the flue from the last boiler in the line if made 10 per cent greater

FIG. 5. STEEL BREECHING

TABLE 7

DIMENSIONS OF BREECHING (FIG. 4)

	Horsepower	50	60	70	75	80	90	95	110	125	135	155	170	190
	Boiler Diameter, Inches	48	54	60	60	60	60	66	66	72	72	72	78	78
Width of breeching 2′ – 6″	Height of breeching at 1st boiler, cen. line, in	18	18	20	20	20	20	24	24	..	..	..	..	..
	Height of breeching at 2d boiler, cen. line, in	36	36	40	40	40	40	48	48	..	..	..	..	..
	Height of breeching at 3d boiler, cen. line, in	54	54	60	60	60	60	72	72	..	..	..	..	..
	Height of breeching at 4th boiler, cen. line, in	72	72	80	80	80	80	..	..	..	..	..	..	..
Width of breeching 3′ – 0″	Height of breeching at 1st boiler, cen. line, in	..	..	..	.		.	19½	19½	26½	26½	26½	30	30
	Height of breeching at 2d boiler, cen. line, in	..	..	.	..	.	..	39	39	53	53	53	60	60
	Height of breeching at 3d boiler, cen. line, in	..	..	.	..	..	..	58½	58½	79½	79½	79½	90	90
	Height of breeching at 4th boiler, cen. line, in	..	.	.	..	..	..	78	78	106	106	106	120	120

in area will be 17.5 sq. ft. The width of opening at the base of stack should not exceed 33 per cent of the outside diameter of chimney.

The outside diameter at bottom for this size chimney from Table 14 is 10.4 ft. The width of flue will be made 3 ft.; the height of flue at chimney will be $17.5/3 = 5.83$ ft. or 5′–10″.

Chimneys for Tall Office and Loft Buildings. The chimney or stack for a tall building is a special case in which the height is frequently fixed by the height of the structure or adjoining buildings. In this case a diameter is assumed and the preceding method applied.

Smoke Breechings. Smoke breechings are ordinarily constructed of steel plate and are made 10 to 15 per cent greater in area than the area of the chimney with which the breeching

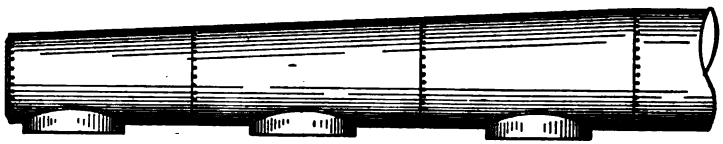

FIG. 6. ROUND STEEL BREECHING.

connects. The smoke connection for each boiler should be provided with a damper that may be operated from the floor either by a damper regulator or adjusted by hand.

Breeching for 50 horsepower boilers and smaller are ordinarily made of No. 14 steel; No. 12 steel for boilers 60 to 115 hp., and No. 10 steel for 125 hp. and larger.

TABLE 8

WEIGHTS OF ROUND BREECHINGS (FIG. 6)

Diameter of Boiler, Inches	Center to Center, Inches	Diameter Breeching, Inches		Weights								
				Two Boilers					Three Boilers			
		Two Boilers	Three Boilers	No. 16	No. 14	No. 12	No. 10	No. 8	No. 14	No. 12	No. 10	No. 8
36	62	28	34	300	350	450	600	750	600	750	1000	1250
42	68	32	40	400	450	600	750	900	750	1000	1250	1550
48	78	36	42	450	550	700	850	1100	950	1200	1450	1850
54	84	40	48	...	650	900	1150	1400	1100	1500	1950	2400
60	90	44	52	...	800	1100	1400	1700	1350	1850	2400	2900
66	96	50	60	...	900	1250	1600	1900	1500	2100	2700	3200
72	106	52	64	...	1350	1900	2400	2900	2300	3200	4000	4900
78	112	56	68	...	....	2400	3000	3700	....	4000	5000	6200
84	118	60	72	...	....	2700	3400	4100	....	4500	5700	6900

STEEL CHIMNEYS

Guyed Steel Stacks or Chimneys. Steel stacks that do not exceed 75 feet in height or more than 4 feet in diameter are ordinarily guyed by 4 steel cables to resist the wind pressure. The guys are attached at approximately ⅔ of the height. As they do not depend upon any foundation for stability, they are frequently supported directly on the boiler breeching.

Self-Supporting Steel-Plate Chimneys. This type of chimney depends upon the weight of the foundation, which is almost invariably constructed of concrete, for its stability. Steel chimneys are ordinarily lined with 4½″ fire-brick for a height of 25 to 50 ft. above the breeching connection, the remaining portion of the lining being constructed of common brick.

A common type of self-supporting chimney and details of construction are shown by Fig. 7. The letters refer to the data given by Tables 10 and 11.

Thickness of Plates. The thickness of steel plate required for any section is determined by treating the shaft as a uniformly loaded cantilever beam, the total uniformly distributed load being equal to the product of the unit wind pressure per sq. ft. and the projected area of the shaft for the portion above the section or point being considered.

TABLE 9

WEIGHT AND GAGE OF GUYED STEEL STACKS

Diameter, Inches	12	14	16	18	20	22	24	26	28	30	32	34	36	38	40	42	46	48	52	54	60	62	66	72
	9	10	12	14	15	17	18	20	22	24														
		18	15	17	19	21	23	25	27	29	31	33	35	38										
			23	25	27	29	31	33	35	37	39	41	44	47	50	53	58	60						
					33	36	39	42	46	49	52	56	60	63	67	70	76	79	85	89	99			
						45	49	53	57	61	65	69	73	77	81	85	93	97	105	109	121	125	133	145
							58	62	67	71	76	80	85	89	94	99	108	112	121	126	140	144	153	166
							78	84	90	96	102	108	114	120	126	132	144	150	162	168	186	192	204	222
	10	12	14	16	20	23	25	27	30	32	34	36	50	52	55	57	60	64	70	74	80	82	86	92
	30	90	100	115	150	160	170	215	230	255	300	470	560	580	625	710	775	890	1,055	1,100	1,330	1,380	1,475	1,900
	60	65	75	85	90	100	110	125	145	155	230	250	270	300	320	340	370	560	600	685	810	900	1,000	1,200

SPECIFICATIONS OF STACKS FOR ONE OR MORE BOILERS

Guy wire weighs per hundred feet as follows: ⅛", 15 lb.; 5/16", 25 lb.; ¼", 35 lb.

The moment arm y of the horizontal wind force R is equal to $\frac{1}{3} z \left(\frac{2d + d_1}{d + d_1}\right)$ in which z is the distance down from the top of chimney to the section considered, d = outside diameter at the top and d_1 = outside diameter at the section considered.

The formula for determining the stress in the plates at any section is the same as given by Fig. 12 for radial-brick chimneys in which d_1 = the outside diameter of the chimney at the section considered in inches, d_2 = the inside diameter in inches for the same section. The maximum stress occurs on the leeward side, $f_1 = \frac{W}{A} + \frac{M}{S}$. The allowable stress, lb. per sq. in., should not ordinarily exceed 6000 lb. for single-riveted joints and 8000 lb. for double-riveted joints. The least thickness that should be used is $^3/_{16}$ in., and where stacks are over 7 ft. in diameter, or 150 ft. high, the thickness should not be less than $\frac{1}{4}$ in.

The following simplified formula, for all practical purposes of design, may be used in place of the more complicated formula for cylindrical chimneys:

t = thickness of shell, inches.
h = distance from top to the section under consideration, feet.
r = radius of section under consideration, inches.

$t = \frac{h^2}{750\,r}$ for single-riveted girth joints, unit stress 6000 lb. per sq. in.

$t = \frac{h^2}{1000\,r}$ for double-riveted girth joints, unit stress 8000 lb. per sq. in.

The above formula is based on a wind pressure of 25 lb. per sq. ft. of projected area.

Example. Determine the stress in the plates for the section I at top of bell-shaped section 15′–0″ above top of foundation. Fig. 7 for a steel chimney B = 150′ high and A = 66″ diam. (Reference No. 24, Table 10.) The thickness of plate for the first section K is 3/8″, the inside diam. of chimney I = 8′–4″, or 100″, the diameter at the top J = 6′–4″. Assume unit wind pressure p = 25 lb. per sq. ft. of projected area. The projected area of the stack above section I is $(150 - 15)\left(\frac{6.33 + 8.33}{2}\right)$ = 990 sq. ft. $R = 990 \times 25 = 24{,}750$ lb. horizontal wind force. $y = \frac{1}{3}(150 - 15)\left(\frac{2 \times 6.33 + 833}{6.33 + 833}\right)$ = 64 ft. Wind moment $M = R\,y = 24{,}750 \times 64 \times 12 = 19{,}008{,}000$ in.-lb. The section modulus of the chimney at section I is:

$$S = \frac{0.098\left(\overline{100.75}^4 - \overline{100}^4\right)}{100.75} = 2950.$$

The weight of the steel shaft above I is approximately $\frac{135}{150} \times 30 = 27$ tons or 54,000 lb.

The area of steel at section I is:

$$A = 0.7854\left(\overline{100.75}^2 - \overline{100}^2\right) = 118 \text{ sq. in.}$$

$f_1 = \frac{W}{A} = \frac{54{,}000}{118} = 460$ lb. per sq. in. stress due to weight of shell. $f_2 = \frac{M}{S} = \frac{19{,}008{,}000}{2950} = 6443$ lb. per sq. in. stress due to wind moment. Total stress $f_t = f_1 + f_2 = 6903$ lb. per sq. in.

Seams are ordinarily single-riveted except for bell at base of chimney.

The rivet spacing should not be more than 16 times the thickness of plate, or more than 6 inches.

Foundation Bolts for Self-Supporting Steel Chimneys. It is quite generally assumed, although other analyses are sometimes made, that the chimney is fixed at the base, the neutral

FIG. 7. SELF-SUPPORTING STEEL STACK.

TABLE 10

TABLE 11

axis being taken on the center line $x - x$, Fig. 8. In this case any bolt will be stressed in proportion to its distance from the neutral axis, the bolts on the windward side of the neutral axis being in tension.

Let $d_1, d_2, d_3, \ldots . d_n$ = distance of bolt center from neutral axis, feet.

$d_1^2 + d_2^2 + d_3^2 + \ldots . d_n^2 = \Sigma d^2$.

r = radius of bolt circle, feet.

N = number of bolts.

$Q = \frac{\Sigma d^2}{r}$ section modulus of anchor bolt group.

S = stress in extreme bolt, lb.

M = wind moment, ft.-lb.

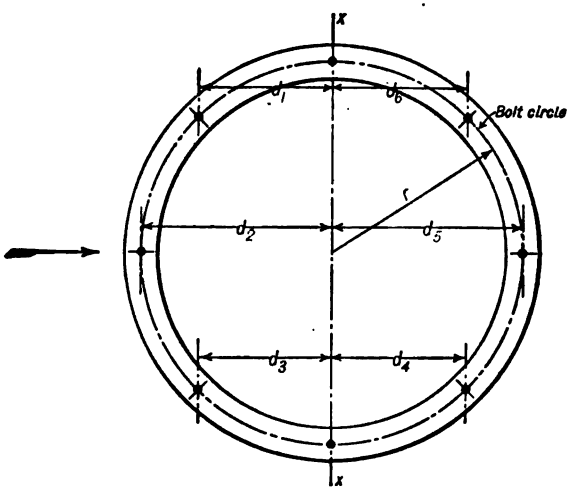

FIG. 8.

$= \frac{25 \times D \times H^2}{2}$ in which 25 is the assumed wind pressure in lb. per sq. ft. of projected area.

D = diameter of cylindrical stack (ft.) and H = height (ft.).

R = righting moment.

= weight of chimney $\times r$.

P = overturning moment, ft.-lb.

$= M - R$,

A = area of bolt at root of thread, sq. in.

f = allowable fiber stress, lb. per sq. in. Ordinarily limited to approximately 12,000 lb. per sq. in.

$S = \frac{P}{Q} = f A$.*

$A = \frac{P}{fQ}$ sq. in.

The foundation is designed in the same manner as for a brick chimney, the soil pressure being ordinarily limited to 2 to 3 tons per sq. ft. See Fig. 12 for formula.

*A formula frequently used by engineers is,

$$S = \frac{2M}{rN} - \frac{W}{N}.$$

Example. Determine the total stress S and unit stress f for the anchor bolts for the chimney given in the preceding example. $H = 150'$; $D = 7.5'$ (approximate average); $r = 7.1'$; $N = 10$. Diam. bolts $2\frac{1}{2}''$, $A = 3.7$ sq. in. $M = \frac{25 \times 7.5 \times 150^2}{2} = 2{,}109{,}375$ ft.-lb. $R = 70{,}000 \times 7.1 = 497{,}000$ ft.-lb. $P = M - R = 1{,}612{,}375$ ft.-lb. $\Sigma d^2 = 242$. $Q = \frac{242}{7.1} = 34$. $S = \frac{1{,}612{,}375}{34} = 47{,}425$ lb. $f = \frac{47{,}425}{3.7} = 12{,}820$ lb. per sq. in.

TABLE 12

BASIS OF SELF-SUPPORTING STEEL CHIMNEY ESTIMATES (For Tables 10 or 11)

RESISTANCE TO WIND PRESSURE, 25 LB. PER SQ. FT. FACTOR SAFETY, 9. COAL CONSUMPTION, 5 LB. BITUMINOUS COAL PER HP. HR. DRAFT PRESSURE BAROMETER, 14.7 LB. OUTSIDE AIR AT 60° F. AND GASES IN CHIMNEY AT 500° F. GRATE SURFACE HAVING 40% EFFECTIVE AREA OF OPENING. CONNECTING FLUES DIRECT WITH 20% GREATER AREA THAN CHIMNEY AREA. TOP OF CHIMNEY EXTENDED ABOVE SURROUNDINGS WHICH WOULD DIVERT DIRECT OUTSIDE AIR CURRENTS. PROPORTIONATE LOSS IN DRAFT POWER BY HORIZONTAL CONNECTING FLUES.

Length of flue in ft....	50	100	200	400	600	1000	1600	2000	3000	Water-heating economizers placed in flues reduce draft 20 to 50% proportionate to temperature and area reduction.
Per cent loss in draft..	1.0	4.3	13.5	26.2	36.5	43.9	49.6	58.7	67.3	

BRICK CHIMNEYS

Ordinary Brick Chimneys. Chimneys built of ordinary brick have a batter of $\frac{1}{16}''$ to $\frac{1}{4}''$ per foot on each side; the diameter at the base is ordinarily made about $\frac{1}{10}$ of the height. The top is protected by a cast-iron cap or the ornamental part at the top laid in Portland cement lime mortar (1–1–4 mix) and capped off with the same material.

The following tables may be used in the preliminary determinations of the thickness of the walls required for brick chimneys, but should always be checked for stability by the method as outlined later.

The brick for the external walls should be selected hard burned and laid in cement lime mortar, 1–2–6 mix for the upper part and 1–2½–8 mix for the lower part.

The core may be second class for brick laid in lime mortar, no cement being used.

(Extract from "The Locomotive.")

The core is by many engineers extended up from the base of the chimney 25 to 50 feet, but better practice is to run it up the whole height, stopping it off 8 or 12 inches from the top and not contract the outer shell. Under no circumstances should the core at the upper end be built into or connected to the outer stack. This has been done in several instances and the result has been the expansion of the inner core, which lifted the top of the outer stack squarely up and cracked the brickwork.

Radial-Brick Chimneys. This type of chimney is built of moulded radial perforated brick which conforms to the curvature of both the inside and outside of the chimney. The standard *Custodis* brick are made $4\frac{1}{2}''$ thick and $6\frac{1}{2}''$ wide, the radial lengths being $4''$, $5\frac{1}{2}''$, $7\frac{1}{8}''$, $8\frac{5}{8}''$ and $10\frac{5}{8}''$. The perforations are $1''$ square; there being 6 in the smallest and 15 in the largest size brick. The dead air spaces provide an excellent insulation, tending to keep the gases hot and thereby promoting good draft. The perforations aid in securing a uniform quality during the burning period and also serve to increase the bonding action between the mortar and brick. The usual taper or batter of radial-brick chimneys is 1.8 to 2 ft. per 100 ft.

These chimneys frequently set on an octagonal base of selected common red brick. The height of the base is made approximately 0.14 of the total height of chimney above the foundation. These chimneys are usually only lined to a height of approximately 35 to 50 ft. above the flue connection, thickness of lining $4\frac{1}{2}''$, air space $2''$.

TABLE 13

BRICK CHIMNEYS (ORDINARY BRICK)

	Thickness of Walls—Inches			
	For Diameters Less Than 3 Feet at Top	For Diameters Greater Than 3 Feet and Less Than 5 Feet at Top	For Diameters Over 5 Feet at Top	Thickness of Core or Lining Inches
Distance = 10 feet from top	4	8	12	1st 20 feet from top—4"
Next 25 feet	8	12	16	Next 30 feet, 8 inches
Next 25 feet	12	16	20	Next 40 feet, 12 inches
Next 25 feet	16	20	24	Next 50 feet, 16 inches
Next 25 feet	20	24	28	Next 50 feet, 20 inches
Next 25 feet	24	28	32	
Next 25 feet	28	32	36	
Next 25 feet	32	36	42	
Next 25 feet	36	42	48	

The *Kellogg Co.'s* corrugated perforated radial brick is shown by Fig. 9. The different wall thicknesses are obtained by a combination of these bricks. They are manufactured in many different radii so that when laid in the wall they will form the normal ring with thin, even joints.

The method of bonding is shown by Fig. 10. It will be noticed that there is a perfect interlocking of the bricks. The fact that the bricks are perfectly bonded, added to the fact that each brick is keyed to the other through the mortar in the perforations, makes a remarkably strong wall to resist heat strains. Fig. 11 gives the thickness of *Kellogg* radial-brick chimneys.

TABLE 14

TABLE OF BOTTOM DIAMETERS OF KELLOGG RADIAL-BRICK CHIMNEYS

Height of Chimney in Feet	Internal Diameter at Top														
	3′	3′6″	4′	4′6″	5′	5′6″	6′	6′6″	7′	7′6″	8′	8′6″	9′	9′6″	10′
	Diameters in Feet at Bottom of Column														
75	7.42	7.69	7.96	8.46	8.96	9.46	9.96								
80	7.80	8.04	8.27	8.70	9.13	9.58	10.02								
85	8.18	8.38	8.58	8.95	9.31	9.70	10.08								
90	8.57	8.73	8.88	9.18	9.48	9.81	10.13								
95	8.95	9.07	9.19	9.43	9.66	9.98	10.19								
100	9.33	9.42	9.50	9.67	9.83	10.04	10.25	10.75	11.25	11.75	12.25				
105	9.70	9.78	9.85	10.03	10.21	10.38	10.55	11.08	11.50	11.95	12.40				
110	10.06	10.13	10.20	10.40	10.60	10.78	10.85	11.30	11.75	12.15	12.55				
115	10.43	10.49	10.55	10.77	10.98	11.07	11.15	11.58	12.00	12.35	12.70				
120	10.79	10.85	10.90	11.14	11.37	11.41	11.45	11.85	12.25	12.55	12.85				
125	11.16	11.21	11.25	11.50	11.75	11.75	11.75	12.13	12.50	12.75	13.00	13.50	14.00	14.50	15.00
130			11.65	11.88	12.10	12.12	12.13	12.47	12.80	13.09	13.37	13.80	14.22	14.69	15.15
135			12.05	12.25	12.45	12.48	12.51	12.81	13.10	13.42	13.73	14.08	14.43	14.87	15.30
140			12.45	12.63	12.80	12.85	12.90	13.15	13.40	13.75	14.10	14.38	14.65	15.05	15.45
145			12.85	13.00	13.15	13.22	13.26	13.49	13.70	14.08	14.46	14.66	14.86	15.23	15.60
150			13.25	13.38	13.50	13.58	13.66	13.83	14.00	14.42	14.83	14.96	15.08	15.42	15.75
155			13.58	13.73	13.87	13.97	14.06	14.18	14.30	14.68	15.06	15.19	15.31	15.61	15.91
160			13.92	14.08	14.23	14.35	14.46	14.53	14.60	14.95	15.30	15.43	15.55	15.81	16.07
165			14.25	14.43	14.60	14.78	14.86	14.88	14.90	15.22	15.53	15.66	15.78	16.00	16.22
170			14.59	14.78	14.96	15.11	15.26	15.23	15.20	15.49	15.77	15.90	16.02	16.20	16.38
175			14.92	15.13	15.33	15.50	15.66	15.58	15.50	15.75	16.00	16.13	16.25	16.40	16.54
180									15.80	16.05	16.30	16.40	16.50	16.65	16.80
185									16.10	16.35	16.60	16.68	16.75	16.91	17.06
190									16.40	16.65	16.90	16.95	17.00	17.16	17.31
195									16.70	16.95	17.20	17.23	17.25	17.41	17.57
200									17.00	17.25	17.50	17.50	17.50	17.67	17.83
205													17.80	17.98	18.16
210													18.10	18.30	18.50
215													18.40	18.62	18.83
220													18.70	18.94	19.17
225													19.00	19.25	19.50

The dimension across the flats for an octagonal base may be determined as indicated by the following example, Fig. 14. The size across the flats for a 180′ x 7′-6″ chimney, the height of the octagonal base being 30′, first find the diameter at the bottom of column or 150′ down

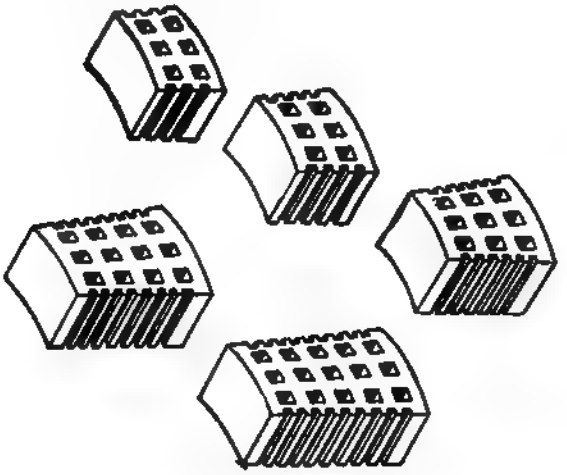

FIG. 9. PERFORATED RADIAL BRICK.

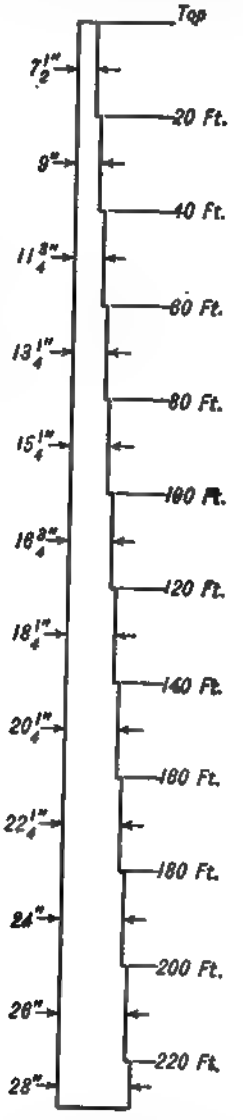

FIG. 10. METHOD OF BONDING RADIAL BRICK

FIG. 11. HEIGHT AND THICKNESS OF WALLS OF RADIAL-BRICK CHIMNEYS.

from top from Table 14, or 14′–5″ in this case. Continue the taper of the 150′ chimney to 180′. In 150′ the outside diameter has increased from 8.75′ at the top to 14.42′ at the bottom or 5.67′ —continued to 180′ this increase would be $5.67 \times \frac{180}{150}$ or 6.81′, which, added to 8.75′, gives 15.56′.

The across flats dimension of the base should be the next larger even inch or 15′–7″. The base is made circular inside with an offset of 1 inch from the column above.

TABLE 15

WIDTH OF FOUNDATIONS AT BASE FOR RADIAL-BRICK CHIMNEYS*

Height Chimney in Feet	Inside Diameter at Top—Feet							
	3	4	5	6	7	8	9	10
90	11′–6″	12′–0″	13′–0″	13′–9″	....	....	....	....
100	12 –6	13 –0	14 –0	14 –8	15′–6″	16′–0″	....	....
110	13 –6	14 –3	15 –0	15 –6	16 –6	17 –0	....	....
120	14 –6	15 –3	16 –0	16 –6	17 –6	18 –0	....	....
130	15 –6	16 –6	17 –3	17 –8	18 –8	19 –3	20′–0″	21′–3″
140	....	17 –9	18 –6	18 –10	19 –9	20 –3	21 –0	22 –3
150	....	19 –0	19 –9	20 –0	21 –0	21 –6	22 –3	23 –6
160	....	20 –6	21 –0	21 –6	22 –6	23 –0	23 –6	24 –9
170	....	22 –0	22 –6	23 –0	23 –9	24 –3	25 –0	26 –3
180	....	....	....	....	25 –6	26 –0	26 –6	27 –6
190	....	....	....	....	27 –0	27 –6	28 –3	29 –3
200	....	....	....	....	28 –6	29 –0	29 –9	30 –9
210	....	....	....	....	....	....	31 –6	32 –6
220	....	....	....	....	....	....	33 –0	34 –3

* Values interpolated from curves by *M. W. Kellogg Co.* Maximum unit soil pressure at outer edge of foundation due to dead and wind loads does not exceed 2 tons per square foot.

The width at top of foundation is made approximately 1′–3″ wider than the outside diameter at base of stack, as given by Table 14.

The width of base required may be checked by means of the formula, Fig. 12.

TABLE 16

SAFE BEARING POWER OF SOILS

Ira O. Baker

Kind of Material	Safe Bearing Power Tons per Sq. Ft.		
	Minimum	Maximum	Average
Rock, the hardest, in thick layers, in native bed	200	..	.....
Rock, equal to the best ashlar masonry	25	30	27.5
Rock, equal to the best brick masonry	15	20	17.5
Rock, equal to poor brick masonry	5	10	7.5
Clay in thick beds, always dry	6	8	7.
Clay in thick beds, moderately dry	4	6	5.
Clay, soft	1	2	1.5
Gravel and coarse sand, well cemented	8	10	9.
Sand, dry, compact and well cemented	4	6	5.
Sand, clean dry	2	4	3.
Quicksand, alluvial soils, etc	0.5	1	0.75

In his book, "Allowable Pressures on Deep Foundations," *Elmer C. Corthell* gives the following summary:

The pressures of stable structures on fine sand range from 2.25 to 5.80 tons, average 4.5 tons.
On coarse sand and gravel, 2.4 to 7.75 tons, average 5.1 tons.
Sand and clay, 2.5 to 8.5, average 4.9 tons.
Alluvium and silt, 1.5 to 6.2, average 2.9 tons.
Hard clay, 2.0 to 8.0, average 5.08 tons.
Hardpan, 3.0 to 12, average 8.7 tons.
Clay, 4.5 to 5.6, average 5.2 tons.

TABLE 17

CARRYING CAPACITY OF VARIOUS TYPES OF PILES FOR AVERAGE SOIL CONDITIONS

Size of Pile	Surface Area, Square Feet	Frictional Carrying Capacity at 300 Lb. per Sq. Ft.	Bearing Area at Foot or Point, Square Feet	Direct Bearing Capacity at 6 Tons per Sq. Ft.	Total Carrying Capacity of Pile
		Tons		Tons	Tons
Wooden Pile 30 ft. long. Diameters 12" and 7"	74.5	11.2	0.270	1.35	12.6
Concrete Pile 30 ft. long. Diameters 18" and 6"	94.3	14.2	.205	1.03	15.2
Concrete Pile 30 ft. long. Diameters 14" and 14"	110.0	16.5	1.07	5.35	21.9
Concrete Pile 30 ft. long. Diameters 16" and 16"	125.7	18.8	1.395	6.96	25.8
Concrete Pile 30 ft. long. Diameters 17" and 17"	133.5	20.0	1.58	7.90	27.9
Concrete Pedestal Pile 30 ft. long. Diameters 17" and 3 ft	133.5	20.0	7.10	35.5	55.5

NOTE.—Ordinarily it takes about twice the number of piles for a chimney foundation that would be required for the dead load only. Concrete piles cost about $1.50 per foot in place.

TABLE 18

NORMAL TOTAL DEPTH OF FOUNDATION FOR RADIAL-BRICK CHIMNEYS*

Size of Chimney	Total Depth of Foundation
75' x 3' up to and including 100' x 6'	4'-6"
100 x 7 up to and including 100 x 8	5-0
125 x 3 up to and including 125 x 8	5-0
125 x 8-6" up to and including 125 x 10	6-0
150 x 4 up to and including 150 x 8	6-0
150 x 8-6 up to and including 150 x 10	6-6
175 x 4 up to and including 175 x 9	6-9
175 x 10	7-0
200 x 7 up to and including 200 x 9	8-0
200 x 10	9-0
225 x 9 up to and including 225 x 10	10-0

* The values given by table are mimimum and must frequently be considerably increased to suit local conditions, as for example adjoining building excavations and foundations that are in excess of the depths stated. Foundations, unless reinforced, should be stepped off as shown by Figs. 13 and 14.

TABLE 19

DEAD LOAD OF RADIAL-BRICK CHIMNEYS—IN TONS OF 2,000 POUNDS*

Height Feet	Inside Diameter at Top, Feet							
	3	4	5	6	7	8	9	10
90	90	98	110	122	...	...	...	...
100	110	120	131	143	161	180	...	...
110	138	143	155	167	188	206	...	...
120	160	170	185	198	218	237	...	...
130	...	202	218	231	252	278	295	318
140	...	237	256	270	290	310	337	357
150	...	277	296	311	330	353	375	400
160	...	317	340	357	375	402	423	447
170	...	362	388	410	425	454	475	500
180	...	...	...	...	480	510	537	555
190	...	...	...	...	535	570	592	617
200	...	...	...	...	600	632	657	685
210	...	...	...	...	...	...	727	760
220	...	...	...	...	...	...	804	843

* Values interpolated from curves by *M. W. Kellogg Co.*, and are for round radial-brick chimneys exclusive of the weight of foundation.

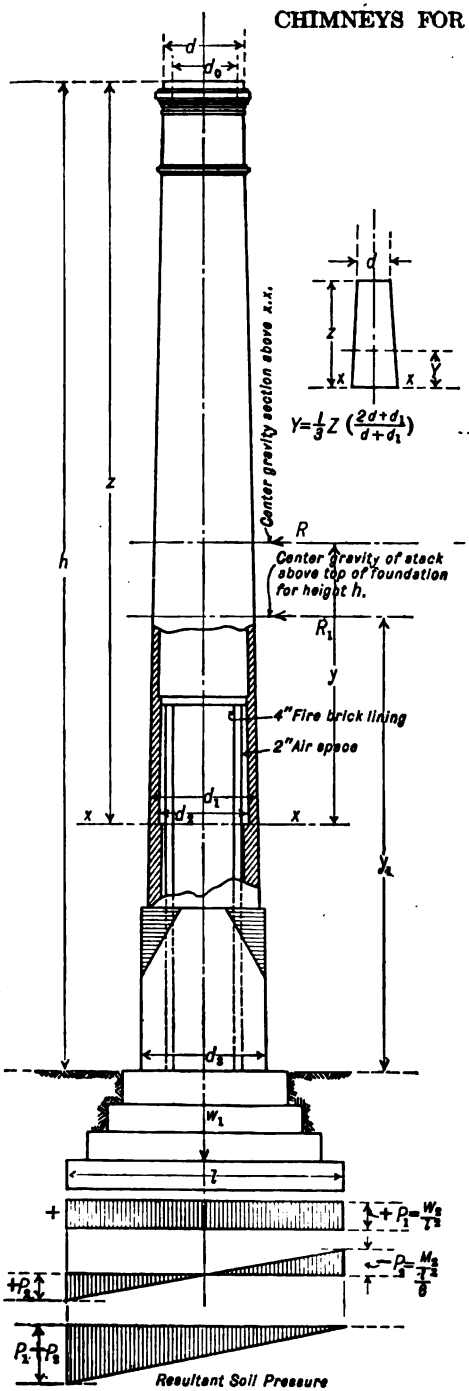

FIG. 12.

Chimney Design Formula:

Let P = horizontal wind pressure, lb. per sq. ft., ordinarily assumed as 25 lb. per sq. ft. for round chimneys.

$x - x$ = any section distant z from top of chimney.

$z\left(\frac{d+d_1}{2}\right)$ = projected area above $x - x$.

R = horizontal wind load, lb.

$$= Pz\left(\frac{d+d_1}{2}\right).$$

y = distance from $x - x$ to center gravity of portion above $x - x$.

M = wind moment, ft.-lb.

$$= Pzy\left(\frac{d+d_1}{2}\right).$$

Properties of Section:

d_1 = outside diameter.

d_2 = inside diameter.

A = area.

$= 0.7854\ (d_1^2 - d_2^2)$.

S = Section modulus.

$$= \frac{0.0982\ (d_1^4 - d_2^4)}{d_1}$$

W = weight of chimney above $x - x$.

f_1 = compressive stress at edge on leeward side, tons per sq. ft. due to W.

f_2 = compressive stress at edge on leeward side, tons per sq. ft. due to M.

$$f_1 = +\frac{W}{A} \quad f_2 = \pm\frac{M}{S}.$$

Windward side $f_w = \frac{W}{A} - \frac{M}{S}$. Tension.

Leeward side $f_l = \frac{W}{A} + \frac{M}{S}$. Compression.

f_w and f_l should not exceed the following values, tons per sq. ft. for radial-brick chimneys:

Maximum Tension		*Maximum Compression*	
Below 150'....	2 to 2½	200' and below.....	19
150 to 200'....	1 to 1½	Above 200'.....	21
Above 200'....	0		

Foundations. Calculate wind moment, M_1 for chimney above ground line.

$$M_1 = Phy_1\left(\frac{d+d_3}{2}\right).$$

l = length of side of square base.

$A_1 = l^2$ = area of base.

$S_1 = \frac{l^3}{6}$ = section modulus base.

W_1 = combined weight of chimney and foundation.

Resultant Soil Pressure. Tons per sq. ft.

$P_1 = \frac{W_1}{A_1}$ = compression per sq. ft. due to W_1.

$P_2 = \frac{M_1}{S_1}$ = compression per sq. ft. due to the Moment, M_1.

The weight of 4½" brick lining may be approximated by the formula, weight in tons is equal to height of lining in feet times outside diameter in feet taken at the midpoint times 0.063.

Plain concrete is figured as weighing 1.9 tons per cu. yd. and if reinforced, 2 tons per cu. yd.

Example. Determine maximum compression, tons per sq. ft. at the base of column, for the chimney shown by Fig. 13 and also the maximum soil pressure, tons per sq. ft. Assumed wind pressure 25 lb. per sq. ft. See formulæ Fig. 12.

Area of section at base $A = 0.7854\ (16^2 - 12.3^2) = 80.9$ sq. ft.

Section modulus at base $S = \dfrac{0.0982\ (16^4 - 12.3^4)}{16} = 257.$

The total weight of brick column from Table 19 is $W = 495$ tons (interpolated),

The projected area of column is, $\dfrac{8'\text{–}9'' + 16'\text{–}0''}{2} \times 180 = 2228$ sq. ft.

The horizontal wind load $R = 2228 \times 25 = 55{,}700$ lb. $= 27.8$ tons.

The moment arm of R is $y = \dfrac{1}{3} \times 180 \left(\dfrac{2 \times 8.75 + 16}{8.75 + 16}\right) = 81$ ft. The wind moment $M =$ $81 \times 27.8 = 2252$ ft.-tons. $f_1 = \dfrac{495}{80.9} = 6.2$ tons per sq. ft. $f_2 = \pm \dfrac{2252}{257} = 8.7$ tons per sq. ft.

Maximum compression on leeward side $f_1 + f_2 = 6.2 + 8.7 = 14.9$ tons sq. ft. Maximum tension on windward side $f_1 - f_2 = -2.2$ tons per sq. ft.

Foundation. The length of base $l = 25.5'$, $A_1 = l^2 = 650$ sq. ft. $S_1 = \dfrac{\overline{25.5}^3}{6} = 2763.$ Weight of foundation based on 1.9 tons per cu. yd. is 266 tons. The weight of the 4½" lining is, $36 \times 11 \times 0.063 = 25$ tons. The total weight of column, lining and foundation is, $W_1 = 495 + 25 + 266 = 786$ tons.

The moment arm for R may be assumed the same as before or 81 ft., then $M = 2252$ ft.-tons.

$$P_1 = \frac{786}{650} = 1.2 \text{ tons per sq. ft.} \quad P_2 = \frac{2252}{2763} = 0.81 \text{ tons per sq. ft.}$$

Maximum soil pressure $P_1 + P_2 = 1.2 + 0.81 = 2.01$ tons per sq. ft.

Standard Specifications for Perforated Radial-Brick Chimneys.* 1. *Scope.* The work included under this contract is to consist of all labor and material necessary for the erection complete of one radial-brick chimney in accordance with this specification, which shall become a part of the contract. The proposal shall include all scaffolding, cartage, unloading of material and removal of rubbish necessary to leave the chimney in a first-class condition ready for operation.

GENERAL CONDITIONS: (Items 2 to 6 inclusive.) 2. *Delivery.* The chimney will be built at..... located on the..... .....railroad.

Note. In order that bidders may correctly estimate freight, labor and insurance rates, it is quite desirable that this space be carefully filled in.

Material may be unloaded on owner's siding which is within..... of the chimney site.

Note. The wheeling or trucking distance from point of transportation delivery to site of chimney should be as carefully estimated as possible. Do not give distance as the crow flies. This item is important as it affects the contractor's estimate considerably.

3. *Space.* Sufficient storage room for chimney contractor's materials will be provided adjacent to chimney as well as unobstructed access from transportation delivery to the site of

* Prepared by the *M. W. Kellogg Co.*

chimney for delivery and removal of materials and tools. At least one side of chimney will be left free and open by the owners for hoisting and working space until the chimney is completed.

4. *Water.* The owners will provide the chimney contractor with necessary water within fifty

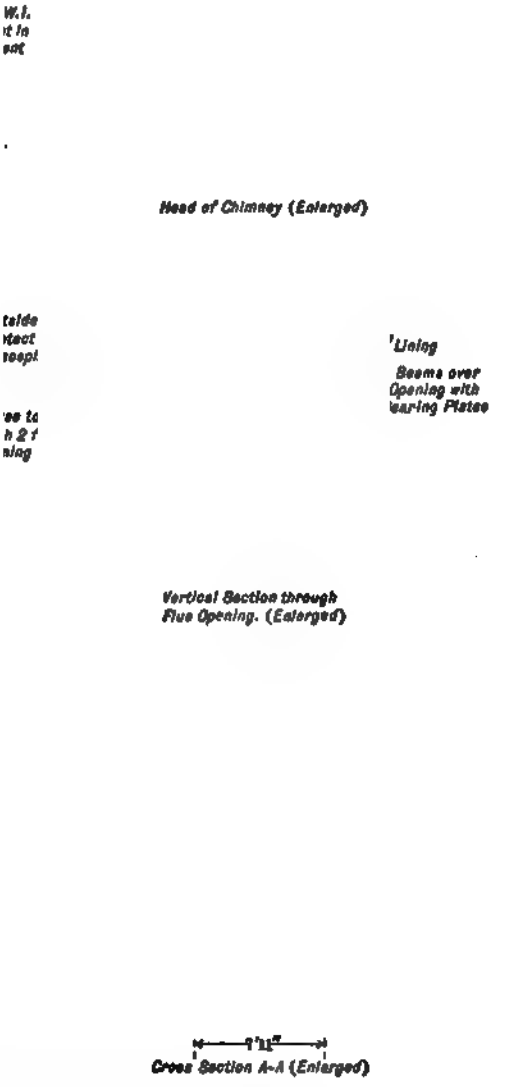

FIG 13. DESIGN OF RADIAL-BRICK CHIMNEY.

feet of the site of the chimney free of expense to the chimney contractor. From this point the chimney contractor will make his own hose connections if required.

5. *Workmanship and Materials.* All workmanship and materials shall be first class.

The chimney contractor shall furnish a competent foreman under whose supervision the chimney will be built. Chimney must be built in a thorough, complete and workmanlike manner.

6. *Time of Completion.* The chimney contractor shall state in bid the guaranteed number of working days in which he will finish the chimney after the receipt of signed contract and approved drawings.

7. *Foundation.**

Note. As a general rule the foundation can be built cheaper by the owner than by the chimney contractor, for the reason that other concrete work may be going on or under contract, and the owner then gets the benefit of a unit price for larger volumes of concrete. It may also happen that the owner has men who can do this work at odd times; whereas, the chimney contractor must pick up men and must supervise the work with an expensive foreman. Since the chimney contractor is held responsible for the design of the foundation, it would seem more satisfactory all around for the owner to build the foundation.

Proper foundation will be built by the owner from plans and specifications to be furnished by the chimney contractor, who will, upon completion, give in writing his approval of the foundation as being sufficient to sustain the chimney and fulfill the guarantee.

Note. In case, however, it is desired to have chimney contractor build the foundation, the following may be used.

The chimney contractor shall furnish a concrete foundation of proper depth and spread to safely sustain the chimney. The foundation shall be not loaded to more than.....tons per square foot, which is the safe bearing value as determined for this work.

Excavating shall be done by contractor for foundation.

Note. The nature of the ground will be more thoroughly understood by the designer than could be ascertained by the chimney contractor, and for the purpose of getting bids on an even basis this method of limiting the bearing value of the soil would seem the fairest way of securing bids. In case it should be determined after excavation is made that the foundation should be larger or smaller, a corresponding increase or decrease of quantities at a reasonable rate could be made.

The concrete shall be composed of cement, sand, stone or gravel in the proportion of one part cement to two and one-half parts sand and five parts of stone or gravel. It shall be deposited in the forms in layers not to exceed six inches in thickness and thoroughly rammed into place. Concrete shall be a wet mixture.

8. *Design.* The design of the chimney shall conform to the following dimensions as shown on drawing attached.

Height above top of foundation.....feet.....inches.
Minimum internal diameter.....feet.....inches.

The wall of the column shall have one straight and true batter from top to bottom. The wall thicknesses and section lengths to be as shown on drawing. In case the contractor's standard wall thicknesses should not be exactly as shown, a variation of three per cent will be allowed in either direction.

Note. As a rule chimneys built round for the entire height of radial brick are the cheaper (see Fig. 13), but it is sometimes advisable, however, to design the chimney with what is known as base and column construction (Fig. 14). Three considerations affect this design, namely, width of flue opening, a desire on the part of the designer to have the lower portion of the chimney match the building walls in color of brick, contour, or for other architectural reasons, or, if chimney is located advantageously to point where building brick are cheap.

The most economical height of base is approximately one-sixth the height of chimney and unless the base is designed to match building courses or on account of the flue opening coming at an unusual height, this rule should be followed: The dimensions should be made to the nearest 5-foot level above. For example: 100′ chimney = 20′ base, 125′ = 25′, 150′ = 25′ or 30′, 175′ = 30′, 200′ = 35′, 225′ = 40′. A point to be borne in mind also is that there should be at least 3 feet of base above top of breeching entrance.

*NOTE.—Concrete foundations cost approximately $5.00 to $6.00 per cubic yard in place.

If for any reason the flue opening into the chimney should be wider than is normally permitted in an entirely round chimney, then a base should be used and be made either octagonal or square in shape.

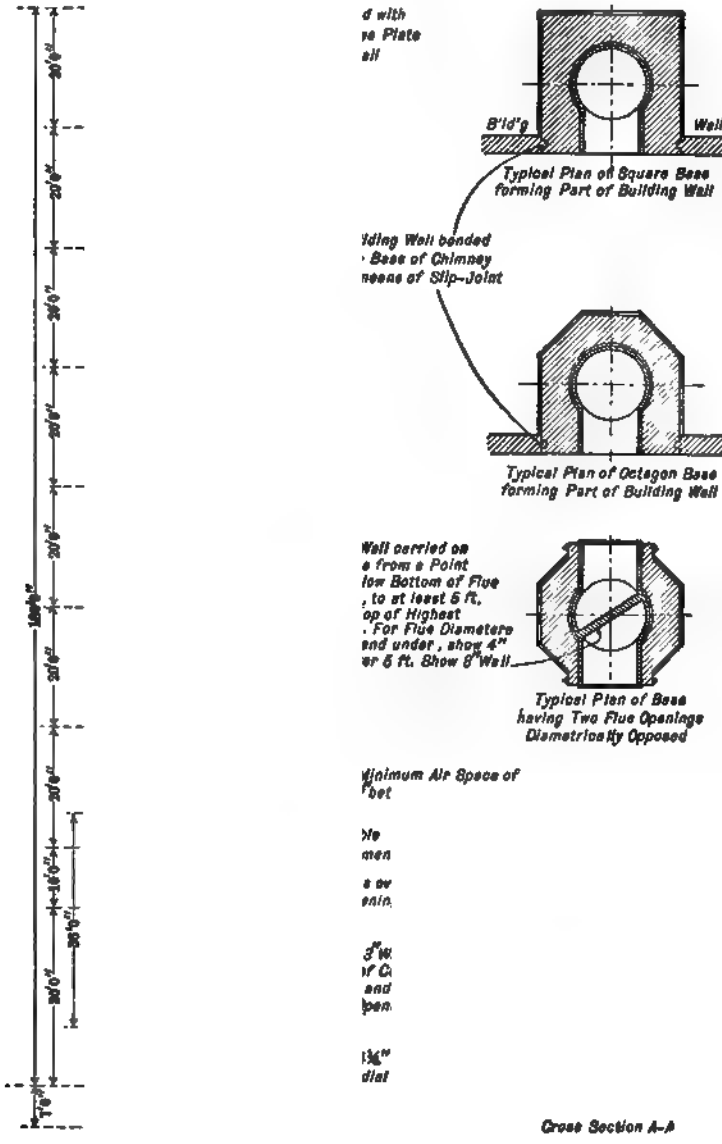

FIG. 14. RADIAL-BRICK CHIMNEY WITH OCTAGONAL BASE.

It frequently occurs that due to limited headroom the flue opening must be wider than could otherwise be designed. A rule for determining the maximum width of flue opening into chimney bases is as follows: Multiply the width of the chimney at the bottom by the following factors:

For round chimney bases	33%.	See Fig. 13.
For octagonal chimney bases	42%.	See Fig. 14.
For square chimney bases	50%.	

It is advisable to keep the width of the flue as narrow as possible in order to maintain the highest stability through the flue opening. A good rule to follow is to make the flue opening at least twice as high as it is wide.

9. *Base.*

Note. If chimney is to be built with base and column construction, use the following:

The base of the chimney shall be built (here fill in shape of base) in shape.....feet high of the dimensions shown on drawing of straight, hard, well-burned, well-shaped common building brick laid in full bed of cement lime mortar, as herein specified.

Note. If round for the entire height, specify as follows:

The chimney shall be built of perforated radial brick for the entire height, as hereinafter specified.

10. *Radial Brick.* All radial brick shall be best quality, molded from refractory clay, sound ringing, hard, well burned, well shaped, of reasonably even color and free from checks; made to closely conform with the circular and radial lines of the shaft, and shall be weather and acid proof. They shall have a water absorption of not less than five per cent nor more than twelve per cent of their dry weight after immersion for a period of twenty-four hours; and shall have a crushing strength of not less than six thousand pounds per square inch. The total amount of perforations shall not exceed one-fifth of the cross-area of the brick. One cubic foot of radial brickwork shall weigh not less than one hundred and twenty pounds. The outside faces of the brick shall be of regular size, so that the general appearance of the brickwork will be neat and uniform.

11. *Lining.*

Note. The height of the lining for chimneys is found in the following manner:

For ordinary boiler work where the temperature does not exceed 800° Fahr. the lining should be approximately one-fifth the height of the chimney.

For temperatures above 800° and below 1200°, the lining should be one-half the total height.

For temperatures above 1200° and below 2000°, the lining should be full height of perforated radial brick.

For temperatures above 2000° in general, the lining should be of a special high-grade fire-brick cut to radius.

For temperatures above 1200° it is well, however, to take up with a chimney expert the exact method of meeting the conditions.

The chimney shall have an expansion lining built of perforated radial fire-brick four and one-fourth inches thick, ... feet high from a point two feet below the bottom of the flue opening. The lining prevents the flue gases from coming in contact with the solid masonry of which the shell is built, and shall be separated from same by an air space of not less than two inches.

This lining shall be built after the chimney is finished and exceptional care must be taken to keep the air space clear and free of loose mortar and other dirt.

Rack out the shell of the chimney approximately two inches above the lining to form a ledge for the purpose of diverting the falling soot when the chimney is in operation.

12. *Mortar.* All brickwork shall be laid in cement lime mortar as hereinafter specified with courses level and with full mortar joints throughout. Face brickwork and backing to be laid up at the same time with joints of reasonably even thickness, not exceeding one-half inch. The mortar to be used in the chimney shall consist of one part Portland cement, two parts fresh-burnt lump lime mortar and five parts clean, sharp sand. The cement to be added to the sand and lime mortar as the mortar is required, and no mortar having taken an initial set is to be used. The

cement must not be added until the lime is cool. The sand shall be clean and sharp, free from loam, vegetable matter and large pebbles. If necessary it must be both screened and washed.

13. *Bond.* All common brickwork shall have every fourth course a header course.

Note. The above sentence may be omitted in case chimney is designed round for the entire height as per Fig. 13.

Radial brickwork shall be bonded every three courses.

14. *Breeching Opening.*

Note. As a rule one opening into a chimney is sufficient. Sometimes it is desirable to locate the chimney in such a position that gases will be drawn in two opposite directions. It is then advisable to have two openings in the chimney. In case there are two openings a baffle wall from a point two feet below the bottom of the flue opening to five feet above the top of the higher opening should be provided. Baffle wall should be not less than four inches thick of refractory material and bonded to the lining. When baffle is necessary see Fig. 14 for method of construction.

One opening shall be provided in chimney. The opening to be lined on the reveals with refractory material. The masonry above the opening to be supported by heavy I beams set on steel plates with air spaces at each end for expansion. Under these I beams a flat masonry arch shall be built to properly protect the beams from the effect of the gases. The flue opening shall be reinforced laterally by heavy tie rods and plates over the top and at the bottom.

Three-eighths by three-inch steel bands to be placed in the masonry above and below opening.

The opening shall be.....wide by.....high, the bottom of which shall be approximately.....above foundation.

Note. The area of the flue opening should at least be 7 per cent more than the area of the internal top diameter of the chimney, but not more than 15 per cent. The width of opening should not exceed 33 per cent of the outside diameter of stack at base.

15. *Reinforcing Rings.* The chimney contractor shall place in the brickwork at every change in wall thickness steel bands three-eighths inch thick by three inches wide.

If the contractor should furnish perforated radial brick having corrugated sides, these bands may be omitted.

16. *Head.* The head of the chimney shall be neatly corbelled out and fitted with a heavy annular retaining ring set in full bed of cement mortar.

Note. If ornamental design at head of chimney is wanted, as shown on front cover, specify that same is to be worked in, using kiln-burned brick.

17. *Cleanout Door.* Provide and place in base of chimney where directed by the owner a cast-iron cleanout door and frame properly hinged and fitted with latch. Said door to be approximately twenty-four inches wide by thirty-six inches high.

18. *Ladder.* Build on the interior of the chimney a ladder to consist of three-quarter inch galvanized iron rungs spaced approximately fifteen inches center to center and securely anchored to the masonry from top to bottom. These ladder irons to be in shape of a "U" with hooked ends.

The ground plate shall be buried by the contractor for the foundation when it is built.

19. *Lightning Conductor.* The lightning conductor is to consist of.....

Note. Two points are the minimum for any diameter chimney up to five feet inside. Above five feet one point should be added for every two feet in diameter or fraction thereof.

copper points three-fourths inch in diameter by eight feet long with one and one-half inch platinum tips. The points to be anchored to the top of the column and extended from the bottom of the corbelling upward. The lower ends of the points to be connected by a loop of copper cable encircling the chimney. From this loop there is to be one one-half inch seven strand No. 10 Stubbs' wire gage copper cable carried down the side of the chimney and connected to copper ground plate of the three-winged type as best for the proper distribution of charge. The points to be securely fastened to the top of the chimney and the cable to be anchored every seven feet in height with brass anchors, so designed that they will support the weight of the cable.

20. *Lettering.*

Note. It frequently happens that an owner as an advertising medium desires to have the name or the initials of the company worked into the chimney. This may be done at slightly extra expense. The specifications should be as follows:

Work into the column on (one or two) sides as directed the letters (here insert the desired legend) to be made in permanently colored kiln-burnt brick. Letters to be true to size and shape and to be in a true vertical line.

21. *Trimmings.*

Note. Due to architectural reasons on public buildings or in select residential districts, it is sometimes desirable to have the chimney present a more ornamental appearance than is usual for simply factory work. Chimney shafts may be designed with either straight batter or with an entasis. The base and head portions may be decorated with either stone or terra-cotta courses. If other stone or terra-cotta work is to be done at the time chimney is to be built, it should be specified that these courses will be furnished by the building contractor to the chimney contractor. This is the most economical way of handling this type of construction. Since the ordinary rigging employed by chimney builders is necessarily quite light, it should be borne in mind that no one piece of stone or terra cotta should weigh over 200 pounds.

All necessary stone or terra cotta shown on drawing will be furnished without charge by the building contractor to the chimney contractor, who will set same. No one piece will weigh over 200 pounds.

22. *Insurance.* The chimney contractor shall carry at his own expense during the entire period of construction liability insurance, insuring the men in his employ, and the public in general, in case of damage due to accidents.

23. *Guarantee.* The chimney contractor shall guarantee the chimney for a period of five years from date of completion. The guarantee shall cover any defects that may arise within this period due to faulty design, construction, materials, weather, and the products of combustion up to 800° F.,

Note. The guaranteed temperature should be dependent on the work to be performed (see note in Paragraph 11).

and shall further guarantee to make good at his own expense all defects that may arise from any of the above conditions within the specified period.

The chimney shall be designed for a wind velocity of not less than one hundred miles per hour.

Cost of Radial-Brick Chimneys. *Gebhardt*, in his "Steam Power Plant Engineering," gives the following costs of a well-known make of radial-brick chimney:*

TABLE 20

COST OF RADIAL-BRICK CHIMNEYS

Size of Chimney			Size of Chimney		
Height	Diameter	Cost	Height	Diameter	Cost
Feet	Feet		Feet	Feet	
75	4	$1,350.00	175	8	$7,050.00
75	6	1,950.00	175	10	7,925.00
75	8	2,650.00	175	12	8,950.00
75	10	3,725.00	175	14	9,725.00
125	6	3,500.00	200	8	9,250.00
125	8	4,250.00	200	10	10,500.00
125	10	4,675.00	200	12	11,100.00
150	12	5,125.00	200	14	12,500.00
150	8	6,150.00	250	10	16,500.00
150	10	7,125.00	250	12	18,250.00
150	12	7,750.00	250	14	21,500.00
150	14	8,275.00	250	16	24,250.00

*The actual cost varies with the freight rate from the nearest point of manufacture. Prices, exclusive of foundation, in Buffalo, N. Y., 1916 were approximately 40% less than stated by table.

Cost of concrete foundations in place may be estimated at approximately $5.00 per cu. yd.; excavations 30 cents per cu. yd.

REINFORCED CONCRETE CHIMNEYS

This type of chimney, although of comparatively recent design, is finding much favor among engineers and its use is rapidly increasing.

Concrete is well adapted to resist compressive stresses, but quite inefficient in tension. In order to supply this deficiency in tensile strength, steel rods, bars, or structural shapes are imbedded in the concrete.

This type of chimney occupies somewhat less space than a brick chimney on account of the thinness of the walls at the base, and is much lighter in weight. It is a monolithic structure inasmuch as the foundation and stack are cast integral without joints. The construction of this type of chimney is quite rapid, being at the rate of about six feet per day.

Concrete chimney shells are built both tapering and straight. The shell, if made straight, is ordinarily six inches in thickness, and if tapered the shell at the top is made four inches in thickness and is increased in thickness one-quarter inch for each five feet in height. See Fig. 15.

Sufficient vertical steel reinforcement is provided to take care of the entire tension on the windward side, resulting from the wind moment, the allowable stress in the steel being 16,000 lb. per sq. in., giving an apparent factor of safety of about four.

The maximum compression of the concrete resulting from the dead load and wind moment is ordinarily limited to approximately 350 lb. per sq. in. at the base of shell.

The following formula and example in the design of a tapering reinforced concrete chimney 175 feet high by 9 feet diameter are given by the *General Concrete Construction Co.:*

Strain Sheet for Chimney 175′-0″ High by 9′-0″ Diameter.

Dimensions		Dimensions	
Height of Chimney Above Grade	175′ 0″	Inside Diameter of Chimney at Top	9′ 0″
Depth of Foundation Below Grade	6′ 0″	Largest Outside Diameter	14′ 8″
Total Height	181′ 0″	Height of Lining	60′ 0″
Size of Foundation	24′ 0″	Thickness of Shell Tapers from 10½″ to	5″
Height of Foundation in Center	4′ 6″	Assumed Wind Pressure 50 Lb. per Sq. Ft.	

Symbols used in Strain Sheet:

Ac = area of concrete in section in sq. in.
Al_1 = area of cross-section of 4½″ lining.
Al_2–Al_3 = areas for 9″, 13″, etc., lining.
D = outside diameter of shell at section.
Dw = outside diameter of shell at bottom of portion exposed to wind.
d = inside diameter of shell at section.
D_1 = outside diameter of shell at top of chimney.
d_1 = inside diameter of shell at top of chimney.
Wf = weight of foundation.
V = cubic feet of space occupied by chimney below grade.
We = weight of earth on foundation.
Ws = weight of shell above section.
Wl = weight of lining at 120 lb. per cu. ft.
Wt = total dead load on soil.
Pd = earth pressure from weight.
P = total wind pressure above section.
L = lever arm of wind pressure.
M = wind moment at section.
Pw = earth pressure from wind.
Pm = maximum earth pressure from wind and weight.

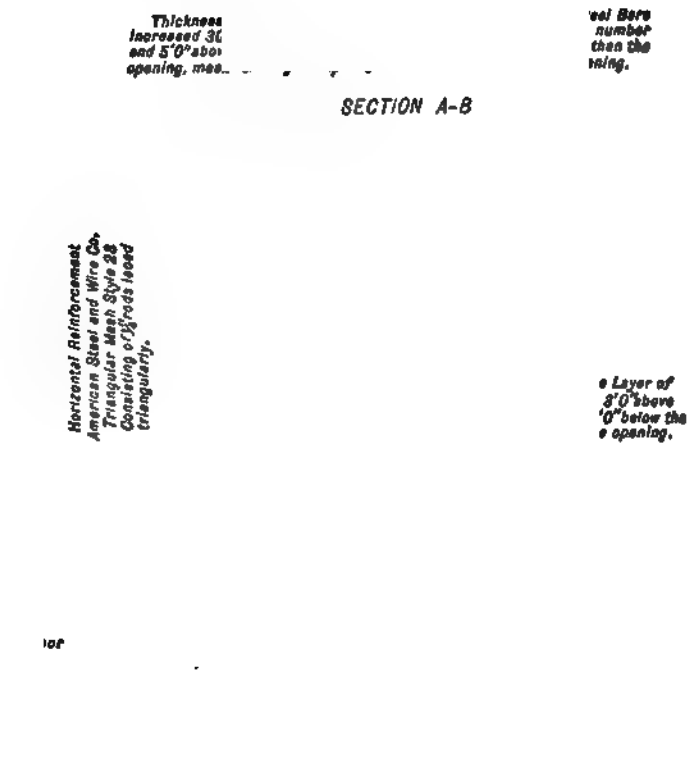

ver or Rectilinear Steel 12 - ½" bars in both directions 24" Centers.
ver or Diagonal Steel 19 - ½" bars both ways on 9" Centers.

REINFORCED CONCRETE CHIMNEY
175'0" x 9'0"

FIG. 15

R = radius of neutral core.
Ms = moment of stability from weight.
Mb = bending moment at section.
I = moment of inertia of section.
Rc = extreme fiber distance at section.
Fc = extreme fiber stress in concrete from wind.
Fc_1 = stress in concrete from weight.
Fc_2 = total compression in concrete from wind and weight.
t = tension allowed in steel.
Rs = radius of steel circle.
S = percentage of steel in section.
Fs = compression in concrete, taken by steel.
Fcm = maximum compression in concrete.
H = height of shell above section.
h = height of shell exposed to wind.
As = area of steel in section.

Section at Base of Foundation.

I.—$Wf = (\overline{24}^2 \times 2 + \frac{\overline{24}^2 + 14.25}{2} \times 2.5)\ 150 =$	348,090	Lb.
II.—$V = 2{,}125.83 + 239.77 =$	2,365[00]	Cu. Ft.
III.—$We = [(\overline{24}^2 \times 6) - V)]\ 100 =$	109,040	Lb.
IV.—$Ws = \left\{[D^2 + (DD_1) + D_1{}^2] - [d^2 + (dd_1) + d_1{}^2]\right\}\ 0.2618H\ 150 =$	627,851	Lb.
V.—$Wl =$	79,488	Lb.
VI.—$Wt = Wf + We + Ws + Wl =$	1,164,469	Lb.
VII.—$Pd = \frac{Wt}{24^2} =$	1.971	Lb. Sq. Ft.
VIII.—$P = \frac{Dw + D^1}{2} \times h \frac{50}{2} =$	52,588	Lb.
IX.—$L = \left(\frac{Dw + 2D_1}{Dw + D_1} \times \frac{h}{3}\right) + 6 =$	33.21	Ft.
X.—$M = PL =$	4,638,787	Ft.-Lb.
XI.—$Pw = \frac{M\ 6}{24^3} =$	2,013	Lb. Sq. Ft.
XII.—$Pm = Pd + Pw =$	3,984	Lb. Sq. Ft.

Section at Top of Foundation.

I.—$Ws = \left\{[D^2 + (DD_1) + D_1{}^2] - [d^2 + (dd_1) + d_1{}^2]\right\}\ 0.2618H\ 150 =$	627,851	Lb.
II.—$R = \frac{D}{8}\left[1 + \left(\frac{d}{D}\right)^2\right] =$	3.147	Ft.
III.—$Ms = RWs =$	1,975,847	Ft.-Lb.
IV.—$P = \frac{Dw + D^1}{2} \times h \frac{50}{2} =$	52,588	Lb.
V.—$L = \left(\frac{Dw + 2D_1}{Dw + D_1} \times \frac{h}{3}\right) + 1.5 =$	33.71	Ft.
VI.—$M = PL =$	4,402,141	Ft.-Lb.
VII.—$Mb = M - Ms =$ 2,426,294 Ft.-Lb.	29,115,528	In.-Lb.
VIII.—$I = 0.049\ (D^4 - d^4)$ values in inches	17,276,535	
IX.—$Rc =$	85½	In.
X.—$Fc = \frac{Mb\ Rc}{I} =$	144.1	Lb. Sq. In.
XI.—$Ac =$	5,353	Sq. In.
XII.—$Fc_1 = \frac{Ws}{Ac} =$	117.3	Lb. Sq. In.
XIII.—$Fc_2 = Fc + 2Fc_1 =$	378.7	Lb. Sq. In.
XIV.—$t =$	16,000	Lb. Sq. In.
XV.—$Rs =$	82½	In.
XVI.—$As = \frac{2\ Mb}{tRs} =$ 44.1144 Sq. In. $\frac{As}{0.5625} =$	78.4	Bars.

Section at Top of Foundation—(Continued):

XVII.—$S = \frac{100\,As}{Ac} =$ 0.82

XVIII.—$Fs = \frac{S\,12\,Fc_1}{100} =$ ..... 37.8 Lb. Sq. In.

XIX.—$Fcm = Fc_1 - Fs =$ ..... 341.4 Lb. Sq. In.

AI = ...	11 04 Sq. Ft.	D = ...	14 25 Ft.	d = ...	12.48 Ft.
AI_2 = ...	Sq. Ft.	D_1 = ...	9.83 Ft.	d_1 = ...	9.00 Ft.
AI_3 = ...	Sq. Ft.	Dw = ...	14.21 Ft.	H = ...	176.50 Ft.
				h = ...	175.00 Ft.

Specifications for a Concrete Chimney.

Dimensions	FEET	INCHES
Height of chimney above grade		
Depth of foundation below grade		
Total height		
Size of foundation		
Height of foundation in center		
Inside diameter of chimney at top		
Largest outside diameter		
Height of lining		
Thickness of shell, tapering from ..... inches to		

Excavation. Purchaser shall do all excavating, protect embankment, keep foundation pit free from water and do any piling that may be required.

[illegible]

FIG. 16.

Delivery and Time. Materials and tools will be shipped in.....days from receipt of notice; unloading to be done by purchaser on arrival. About.....days will be required to complete the work.

Water and Space. Purchaser shall furnish a supply of clean water within 50 feet of the base of the chimney for the prosecution of the work, also dry-storage room for cement and tools, and ample space for other materials. At least one side of the chimney shall be left free for hoisting material and mixing concrete until work is completed.

Materials and Workmanship. All the materials will be the best of their respective kinds, the Portland Cement will be of a standard brand fulfilling the specifications of the *American Society for Testing Materials.* The work will be done in a first-class workmanlike manner under the supervision of an experienced foreman. The concrete will be thoroughly mixed and tamped in the forms and around the steel to secure the best possible bond. The chimney will be built with our patented all-steel forms, insuring a smooth and uniform surface on the concrete, which after completion will be given a coat of cement wash.

Reinforcement. The foundation will be reinforced with two nets of three-quarter inch square twisted steel; the lower net placed diagonally and steel spaced twelve inch centers; the upper net placed parallel to sides, steel spaced twenty-four inch centers. The vertical reinforcement in the chimney will consist of three-quarter-inch square twisted steel; sufficient bars will be used to absorb all tension without stressing it beyond 16,000 pounds per square inch. Rods will be uniformly spaced, and placed 3 inches from the outer surface of the concrete. Joints will lap 30 inches. The vertical rods will be embedded in the foundation and bent under foundation steel for anchorage. The horizontal reinforcement will be a steel net consisting of one-quarter-inch longitudinal rods spaced four inch centers, triangularly laced, the ends lapping 6 inches. This net will be placed around and wired at intervals to vertical steel.

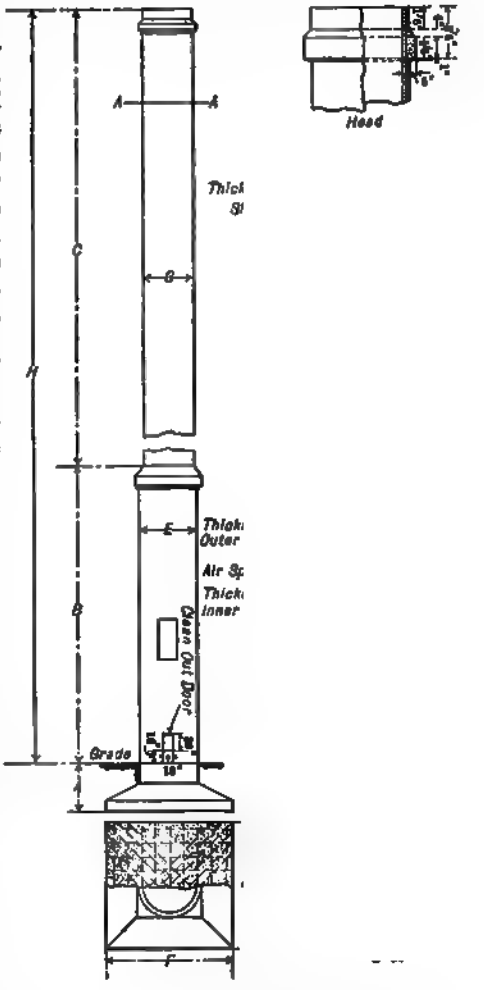

FIG. 17. REINFORCED CONCRETE CHIMNEY DIMENSIONS. (Tables 21 and 22.)

Concrete. The concrete in the foundation will be mixed in the proportion of one part of Portland cement, three parts clean sand, and six parts crushed stone or gravel. The concrete in the chimney will be a "wet mixture" of one part Portland cement, two and one-half parts clean sand, and three parts of one inch crushed stone or gravel.

Attachments and Lining. The chimney will be provided with opening for flue connection and a cast-iron clean-out door. The lining will consist of a good grade of hard-burned brick, covered with a concrete cap, and separated from the concrete shell by an insulating air space.

Design and Guarantee. The foundation will be of such size that the resultant of forces will fall within the middle third, and the maximum compression from live and dead load will not exceed the safe-bearing value of the soil. The shell at the base of shaft will be of such thickness that the maximum compression on concrete will not exceed 350 pounds per square inch. At the

smoke opening the thickness of shell will be increased about 30 per cent on each side and extending five feet above and below, and additional reinforcement provided. The chimney will be designed to withstand a wind pressure due to a wind having a velocity of 100 miles an hour and chimney gases not exceeding 1000 degrees F. For a period of five years after completion we will repair free of charge any defects arising from faulty design, defective materials, or workmanship.

Cost of Reinforced Concrete Chimneys. The following data compiled by *H. A. Strauss* are given to convey an idea of the selling prices of modern concrete chimneys.

Table 21 represents a series of chimneys on the basis of which estimates of the probable cost of a chimney of this type may be made. Table 22 is a record of actual installations of this type of chimney.

It is difficult to give a list of prices that will be general, because the cost of materials and labor vary locally and such chimneys are invariably manufactured and erected at the site.

The prices given apply in general in the Central and Eastern U. S. A., but a 10 per cent increase in the prices given should cover practically any case, however remote, if located on a steam railroad with through connections.

Construction Data. *Foundation.* (*a*) Concrete consists of one part Portland cement, three parts sand, five parts crushed stone or gravel (not over 2″ size).

(*b*) Reinforcement consists of steel bars.

(*c*) This foundation is included in the prices given on this card.

(*d*) Excavation for foundation is not included in price, nor piling if required.

Shaft. (*a*) Concrete consists of one part Portland cement, two and one-half parts sand, four parts crushed stone or gravel (not over 1″ size).

(*b*) Reinforcement consists of vertical steel bars and horizontal steel rings. The latter take up temperature stresses and also shearing stresses caused by wind pressure.

Openings are provided for flue connection and clean-out door.

Designed for wind pressure of 100 miles per hour; and chimney gases up to 1200° F.

Designed for total load on soil of approximate 2 tons per sq. ft.

For underground, flues (*A*) and (*D*) are increased. Use next higher price to allow for this.

TABLE 21

REINFORCED CONCRETE CHIMNEYS

APPROXIMATE PRICES

Height Above Grade	Inside Diameter	Depth Below Grade	Height Double Shell	Height Single Shell	Total Height *A–B–C*	Maximum Outside Diameter	Width of Square Foundation	Approximate Selling Price
H	*G*	*A*	*B*	*C*	*D*	*E*	*F*	$
100′	4′	5′	33′	67′	105′	6′ 4″	12′	$2,000
100	5	5	33	67	105	7 4	12	2,300
125	5	5	42	83	130	7 4	15	2,800
125	6	5	42	83	130	8 4	16	3,200
150	6	6	48	102	156	8 4	18	4,000
150	7	6	48	102	156	9 4	18	4,500
150	8	6	48	102	156	10 4	19	5,000
175	8	7	57	118	182	10 6	22	6,000
175	9	7	57	118	182	11 6	22	6,900
175	10	7	57	118	182	12 6	23	7,800
200	10	7	66	134	207	12 6	25	9,000
200	11	7	66	134	207	13 6	25	9,900
200	12	7	66	134	207	14 6	26	10,800
225	12	8	69	156	233	14 8	29	12,200
225	13	8	69	156	233	15 8	29	13,200
225	14	8	69	156	233	16 8	30	14,200
250	14	8	81	169	258	16 8	32	15,800
250	15	8	81	169	258	17 8	33	16,900
250	16	8	81	169	258	18 8	34	18,000

TABLE 22

REINFORCED CONCRETE CHIMNEYS, ACTUAL INSTALLATIONS

Total height	*D*	160′	171′	187′	216′	266′
Height above grade	*H*	154′	165′	180′	210′	260′
Height above grates	.	150′	150′	175′	200′	250′
Depth found below grade	*A*	6′	6′	7′	6′	6′
Width square part of foundation	*F*	22′	20′	23′	32′	37′
Height square part of foundation	..	3′ 6″	3′ 6″	3′ 6″	4′ 6″	4′ 6″
Inside diameter	*G*	8′ 6″	8′ 0″	10′ 6″	15′	15′
Maximum outside diameter	*E*	10′ 10″	10′ 4″	13′ 10″	17′ 8″	17′ 8″
Boiler horsepower installation	..	1,200	1,200	2,400	8,000	8,000
Boiler horsepower maximum during overload	..	1,800	1,800	3,600	12,000	12,000
Location (State)	..	Ohio	Ind.	Ind.	Cal.	Cal.
Actual price erected complete	..	$4,800	$5,300	$7,500	$14,750	$17,500

NOTE.—The largest chimney of this type in the world stands at Butte, Mont. It is 350′ in height, inside diameter at top 18′. Erected 1905.

CHAPTER VIII

MECHANICAL DRAFT

General Conditions. The rate of driving a boiler plant is dependent upon the intensity of draft available, which, with a chimney, is limited by the height and temperature of the flue gases and is, furthermore, somewhat susceptible to atmospheric conditions.

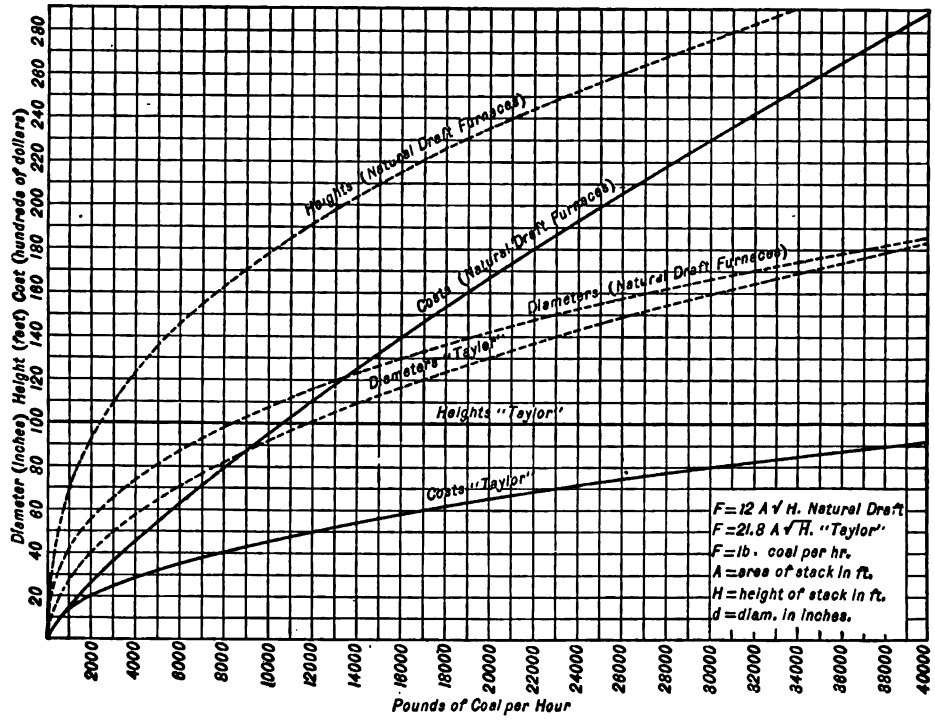

FIG. 1. RELATIVE HEIGHTS, DIAMETERS AND COSTS OF CHIMNEYS FOR TAYLOR AND NATURAL DRAFT FURNACES.

Artificial or mechanical draft is not subjected to any of the above-mentioned limitations and has, briefly, the following advantages over natural draft:

Independent of climatic conditions.

More readily controlled to meet the varying demands of load.

Permits the use of cheap low-grade coal which requires an intensity of draft beyond the height of reasonable chimney construction.

When the height of chimney is not limited by local ordinances, fan draft equipment for medium and large size plants is ordinarily considerably cheaper in first cost than the equivalent chimney installation.

In general, where local ordinances require chimneys of considerable height, artificial draft equipment is not ordinarily installed except in large central-station work to meet emergency peak loads or when a forced draft type of stoker is installed. Forced draft is frequently installed in old plants in order to force the boilers beyond the capacity of the chimney installed to save the expense of additional boilers.

A chimney, when once erected, costs nothing for operation, while the operation of any type of

FIG. 2. SECTION THROUGH BOILER, SHOWING HOW BLOWER IS INSTALLED

mechanical draft apparatus requires the use of steam which amounts from 1½ to 5 per cent of the total steam generated, depending upon the size of plant and method of driving the fans.

The curve, Fig. 1, prepared by the manufacturers of the *Taylor* stoker, may be used in approximating the saving in cost of chimney when forced draft is used. The friction losses are assumed at 200 per cent boiler rating. A constant height of 100 feet for the chimney is assumed for the forced draft equipment.

Classification. Artificial draft equipment is classified as either *Forced* or *Induced*. With forced draft a pressure is created in the ash pit by means of a fan or steam jet, the air being forced through the fuel bed.

With induced draft, a partial vacuum is created in the furnace by either of the two methods mentioned, the air being drawn through the fuel bed, producing the same effect as forced draft.

Steam jet blowers are not used except in small plants and principally for the purpose of quickly raising steam in small portable boilers.

Fan Draft. Fan draft equipment is invariably installed in medium and large size plants in which artificial draft is employed. Tight boiler settings should be the rule in any plant for the most economical operation and are imperative with fan draft equipment.

The main difference between forced and induced fan draft lies in the difference in volume to be handled by the fan. The weight of gas is the same in either case, the volume, however, with forced draft is based on the temperature of the air in the boiler room, say 70° F., while the volume of gases to be handled by an induced draft fan is based on a temperature of approximately 550° F., the ratio of volumes being approximately 1 is to 2. The ratio between the fan speeds necessary

to produce the same pressure (see the Chapter on "Hot Blast Heating," Volume I, Table 27) is 1.38 times the speed required for air at 70° F.

A two or more fan equipment is always advisable in medium and large size plants which must operate continuously or whenever a shutdown of the draft system would prevent carrying the load.

FORCED DRAFT

Forced Draft for Small Plants. A type of forced draft equipment, particularly adapted for small plants, is a combination of steam turbine direct-connected to a propeller type fan installed

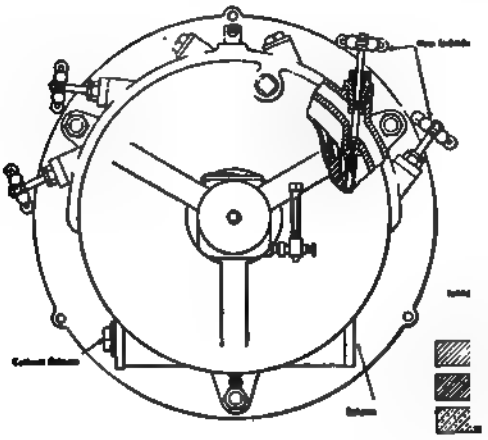

FIG. 3. SECTION THROUGH STURTEVANT UNDERGRATE BLOWER.

in the side-wall setting beneath the grate. A typical example of undergrate blower is shown by Figs. 2, 3 and 4. Installation data are given by Tables 1 and 2.

TABLE 1

ALL DIMENSIONS ARE IN INCHES

(Fig. 4)

Size	Diameter of Pipes (Maximum)		A	B	C	D	E	F	G	H	J	K	L	M	N	O
	Steam	Exhaust														
14	1	2	18¼	24	16½	17½	33½	15¼	7⁹⁄₁₆	10¾	7¼	8²¹⁄₃₂	7¹³⁄₃₂	9	7¼	¾
18	1	2	18½	24	16½	17½	33½	18½	7⁹⁄₁₆	10¾	7⅛	8¹³⁄₃₂	7²¹⁄₃₂	9	7¼	¾
22	1	2	18¾	24	16¾	17½	33½	21½	7⁹⁄₁₆	10¾	7⅛	8¹³⁄₃₂	7¹³⁄₃₂	9	7¼	¾
26	1	2	18⅞	31¾	16⅞	17½	33¼	27½	7⁹⁄₁₆	10⅝	7⅛	8²¹⁄₃₂	7²¹⁄₃₂	9	7⅝	¾

Example. Assume that a plant burning 980 pounds of coal per hour requires 25 per cent more power. Approximately 25 per cent more coal must be burned or $980 \times 1.25 = 1225$ lb. per hour.

If the grate surface is 35 sq. ft. the rate of combustion $R = 1225/35 = 35$ lb. per sq. ft. per hour. Referring to the curves, Fig. 3, Chapter IV, the draft requirements for burning anthracite pea coal at this rate is 1.25 in. water static pressure. The draft furnished by the chimney may be neglected and considered as taking care of the pressure loss through the boiler, breeching, and chimney.

TABLE 2

PRESSURE AND MAXIMUM VOLUME OF AIR DELIVERED BY VARIOUS SIZES OF STURTEVANT TURBO-UNDERGRATE BLOWERS

Size Fan	Static Pressure in Inches of Water	R.P.M.	Cu. Ft. of Air Supplied per Minute
14"	½	2,725	1,650
		3,275	2,075
		3,820	2,525
		4,370	2,920
	¾	2,725	1,435
		3,275	1,985
		3,820	2,425
		4,370	2,815
	1	2,725	890
		3,275	1,780
		3,820	2,325
		4,370	2,745
	1¼	3,000	930
		3,550	1,730
		3,820	2,200
		4,080	2,440
		4,370	2,660
	1½	3,275	990
		3,550	1,475
		3,820	1,960
		4,080	2,285
		4,370	2,565
	1¾	3,550	1,070
		3,820	1,590
		4,080	2,080
		4,370	2,420
	2	3,820	1,220
		4,080	1,700
		4,370	2,200
18"	½	2,470	2,825
		2,920	3,320
		3,370	3,960
		3,810	4,550
	¾	2,470	2,520
		2,920	3,190
		3,370	3,780
		3,810	4,430
		4,270	5,050
	1	2,470	2,055
		2,920	3,020
		3,370	3,710
		3,810	4,280
		4,270	4,860
	1¼	2,470	1,355
		2,920	2,520
		3,370	3,560
		3,810	4,180
		4,270	4,800
	1½	2,920	2,155
		3,370	3,330
		3,810	4,120
		4,270	4,730
18"	1¾	2,920	1,565
		3,370	3,030
		3,810	3,940
		4,270	4,620
	2	3,370	2,430
		3,810	3,750
		4,270	4,500
	2½	3,370	1,650
		3,810	2,960
		4,270	4,130
22"	½	1,905	3,390
		2,290	4,250
		2,670	5,180
		3,050	5,980
	¾	1,905	2,940
		2,290	4,070
		2,670	4,970
		3,050	5,770
		3,435	6,670
		3,815	7,525
	1	1,905	1,830
		2,290	3,660
		2,670	4,770
		3,050	5,630
		3,435	6,225
		3,815	7,380
	1¼	2,290	2,880
		2,670	4,370
		3,050	5,450
		3,435	6,350
		3,815	7,200
	1½	2,290	2,030
		2,670	4,025
		3,050	5,260
		3,435	6,225
		3,815	7,030
	1¾	2,670	3,265
		3,050	4,970
		3,435	5,980
		3,815	6,960
	2	2,670	2,500
		3,050	4,510
		3,435	5,830
		3,815	6,760
	2½	3,050	3,000
		3,435	5,120
		3,815	6,500
	3	3,050	2,300
		3,435	3,940
		3,815	5,880
26"	½	1,560	5,000
		1,710	5,900
		2,020	6,950
		2,340	8,300
		2,640	9,500
26"	¾	1,560	4,350
		1,870	6,050
		2,180	7,350
		2,490	8,550
		2,800	9,950
		3,110	11,200
	1	1,560	2,720
		1,870	5,450
		2,180	7,100
		2,490	8,300
		2,800	9,550
		3,110	10,900
	1¼	1,710	2,480
		1,870	4,290
		2,180	6,520
		2,490	8,120
		2,800	9,440
		3,100	10,700
	1½	1,870	3,020
		2,180	6,000
		2,490	7,840
		2,800	9,170
		3,110	10,500
	1¾	2,020	3,300
		2,180	4,860
		2,490	7,410
		2,800	8,940
		3,110	10,400
	2	2,180	3,720
		2,340	5,200
		2,490	6,720
		2,800	8,690
		3,110	10,050
	2½	2,340	3,460
		2,490	4,460
		2,640	6,200
		2,800	7,630
		2,960	8,670
		3,110	9,700
	3	2,490	3,420
		2,640	4,470
		2,800	5,870
		2,960	7,320
		3,110	7,760
	3½	2,490	2,800
		2,640	3,580
		2,800	4,250
		2,960	5,480
		3,110	7,110
	4	2,640	2,910
		2,800	3,580
		2,960	4,410
		3,110	5,440

The weight of air to be furnished by the fan may be assumed as 20 lb. per lb. of coal as a maximum. (See the Chapter on "Fuels and Combustion.")

The *volume* of air, measured at 70° F., to be handled by the fan per minute is therefore:

$$\frac{1225 \times 20}{60 \times 0.075} = 5500 \text{ cu. ft. (approximate)}.$$

Referring to Table 2 a 22″ size fan operating at about 3200 r.p.m. would be chosen.

STEAM

FIG. 4. DIMENSION DRAWING OF STURTEVANT UNDERGRATE BLOWER. (Table 1.)

Forced Draft for Large Plants. When several boilers are to be served with forced draft in a new plant, a duct system is installed beneath the boiler-room floor connected with one or more fans, the outlets being located in front of the bridge wall, as indicated by Figs. 5 and 6, and controlled by a damper for hand-fired installations.

The duct system may either be constructed of brick, tile, concrete, or galvanized sheet steel.

FIG. 5.

Large radius curves should be employed in all cases and square-cornered turns avoided to prevent excessive friction.

Ducts are designed for air velocities of 2000 to 3000 ft. per minute. The pressure loss may be estimated, for a given layout, by the data given in the Chapter on "Hot Blast Heating," Volume I, or Equation (2), Chapter VII, using a coefficient of friction $f = 0.0044$.

Typical arrangements of forced draft equipment are shown by Figs. 7 to 10.

Fig. 6.

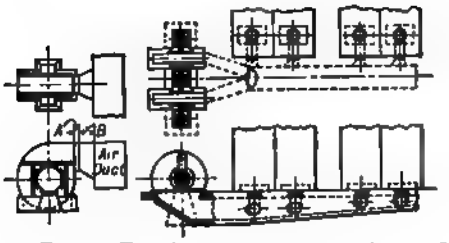

Fig. 7. Single- and Double-Fan Arrangement for a Single Line of Boilers.

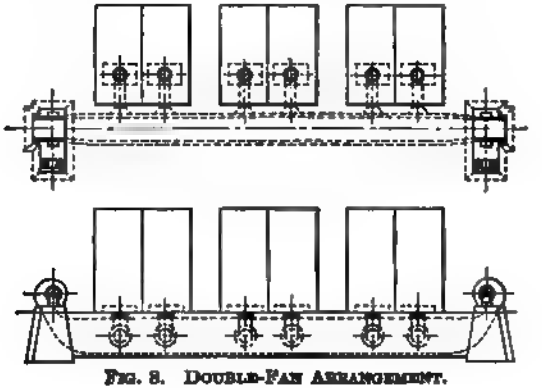

Fig. 8. Double-Fan Arrangement.

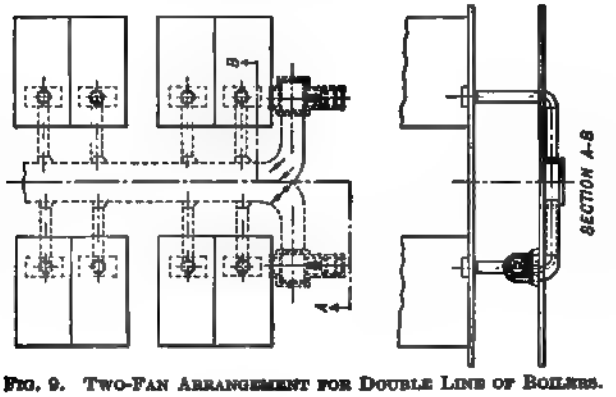

Fig. 9. Two-Fan Arrangement for Double Line of Boilers.

Fig. 2, in the Chapter on "Mechanical Stokers," shows a forced draft installation in conjunction with automatic stokers in which the speed of the fan is controlled and governed by the demand for steam. This may be accomplished in any fan draft installation, where a steam en-

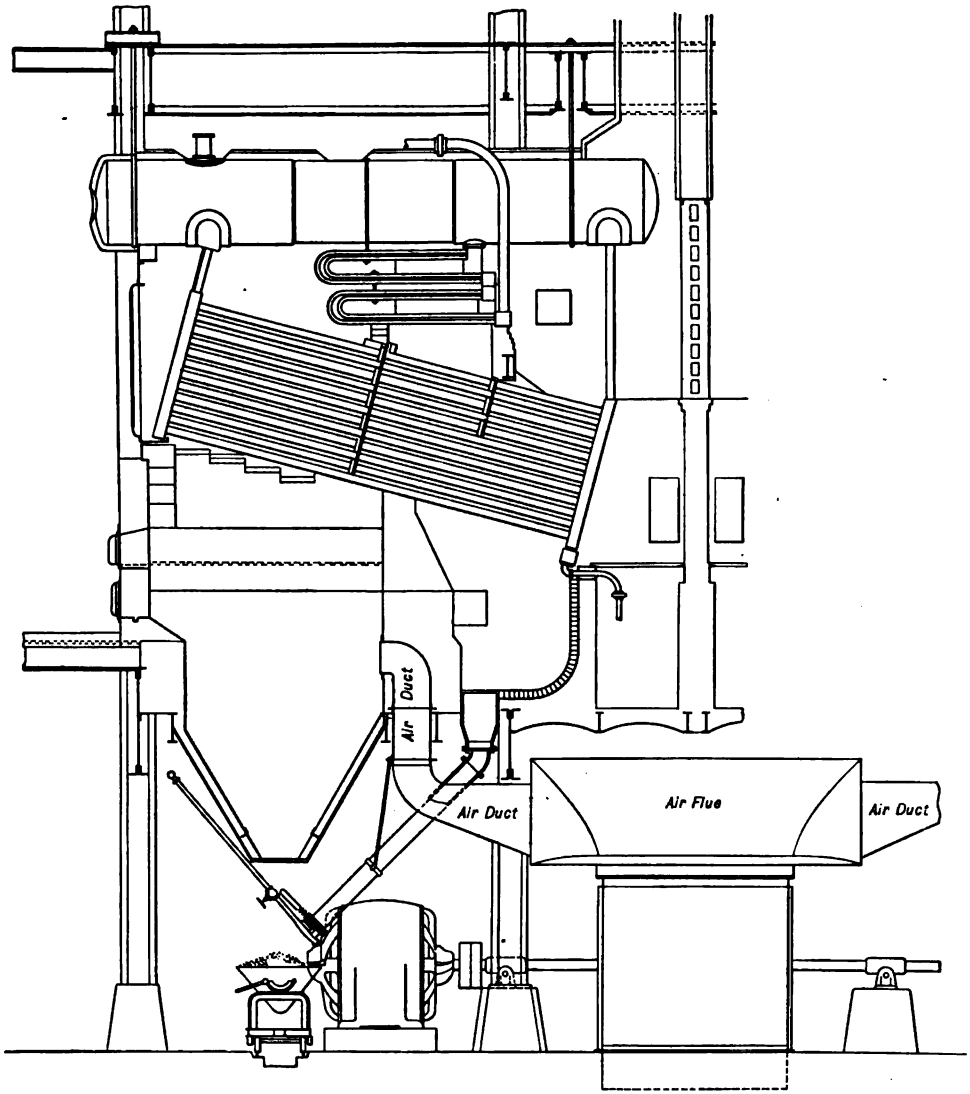

FIG. 10.

gine or turbine is used for driving, by the use of a pressure regulator controlling the steam supply to the engine.

Size of Fan and Power Required for Forced Draft. The following data are used by one prominent fan manufacturer in determining the size of fan and power required for driving.

Air Required per Minute:

28 cu. ft. at 70° per boiler horsepower with chain grates.
21 cu. ft. at 70° per boiler horsepower with ordinary grates.
18 cu. ft. at 70° per boiler horsepower with underfeed stokers.

FIG. 11. PERFORMANCE CURVES AMERICAN STEEL PLATE FANS.

Pressure Required. Ordinary grates—1½" water static pressure with allowance of sufficient power to speed up to 1¾" s.p.

Stokers—2½" water static pressure, not including duct friction.

Where fan blows directly into ash pit without ducts 1¼" s.p. will not be exceeded with ordinary rates of combustion.

FIG. 12. PERFORMANCE CURVES AMERICAN SIROCCO FANS.

Air Handled. 253.5 cu. ft. at 70° F. per lb. of coal burned. This amount corresponds to approximately 19 lb. air per lb. of coal burned. (253.5 × 0.075 = 19.)

Fan Data. See the Chapter on "Hot Blast Heating," Volume I, and also Figs. 11 and 12.
Engine Data. See the Chapter on "Steam Engines."

Example. Required the size of fan and fan engine and the amount of power necessary for a forced draft installation to provide for the following equipment: 8–150 b.hp. units steam pressure 150-lb. gage. Total *rated* capacity 1200 b.hp. Assume that the coal used has a calorific value of 12,000 B.t.u. per lb. and the overall efficiency of the boiler, grate and furnace is 65 per cent. Temperature of feed water 170° F.

Heat required to evaporate one lb. of water for the assumed conditions is: 1196 − 138 = 1058 B.t.u. 1 boiler horsepower = 33,524 B.t.u.

Then $\frac{33{,}524}{1058}$ = 31.7 lb. water to be evaporated per b.hp.-hour.

Water evaporated per lb. of coal is: $\frac{12{,}000 \times 0.65}{1058}$ = 7.4 lb.

Coal required per b.hp. = 31.7/7.4 = 4.3 lb. per hour.

Total coal required per hour = 1200 × 4.3 = 5160 lb. at normal rating of boilers.

If a 50 per cent overload is to be guaranteed then the coal required per hour will be approximately 5160 × 1.5 = 7740 lb., and on a basis of 19 lb. air per lb. coal the volume of air to be supplied by the fan is: $\frac{7740 \times 253.5}{60}$ = 32,702 cu. ft. per min.

Assuming ordinary hand-fired grates are used, a static pressure of 1½" water at the fan will ordinarily be sufficient.

Referring to Fig. 12 it will be found that a No. 10 fan, operating at 220 r.p.m., will deliver 32,500 cu. ft. per min. and requires 12 brake horsepower for the assumed pressure. This will require a 7" × 7" engine based on 150 lb. gage pressure (see the Chapter on "Steam Engines.") The water rate for this size automatic engine will run about 35 lb. per i.hp.-hr.

Assuming a mechanical efficiency of 90 per cent for the engine and 1½" s.p. for the fan, the steam consumption of the forced draft equipment will be: $\frac{12 \times 35}{0.90}$ = 466 lb. per hour.

This is $\frac{466}{1200 \times 1.5 \times 31.7} \times 100$ or 0.82 per cent of the total steam generated.

It may be safely assumed that the steam consumption will be increased to approximately 1½ per cent after equipment has been in operation for some little time.

Some engineers prefer to install a larger engine than is actually required in order that fan may be operated at full speed with a low steam pressure.

The main objection to this is that with a fixed cut-off engine used in this manner the efficiency is lowered, due to wire-drawing of the steam at the governor throttle when operating under full steam pressure.

A more refined method of calculation is to base the static pressure rating for the fan on the sum of the estimated losses through the duct system, fuel bed, boiler, breeching, and chimney. The pressure loss in the duct system may be estimated from the data given in the Chapter on "Hot Blast Heating," Volume I. The loss through the fuel bed and boiler is given in the Chapter on "Power Boilers," and the loss in the breeching and chimney in the Chapter on "Chimneys for Power Boilers" of this volume.

INDUCED DRAFT

Ordinary Systems of Induced Draft. A typical induced draft fan equipment is shown by Fig. 13.

The principal advantage of induced draft over forced draft lies in the fact that it is not necessary to shut off the draft when cleaning fires with hand-fired boilers and some types of mechanical stokers. The following data may be used in calculating an induced draft installation.

Temperature of Gases. 550° F. without economisers, and 350° F. with economisers.

Volume of Gases based on 19 lb. air per lb. of coal, the volume of gases will be: 388 cu. ft. at 350° F. and 482 cu. ft. at 550° F. per lb. coal burned.

Suction Required. For rated capacity, 1" water static pressure; for 25 per cent overload, 1¼" water static pressure; and for 50 per cent overload, 1¼" water static pressure.

FIG. 13. TYPICAL INDUCED DRAFT INSTALLATION.

Example. Required the size of fan and power necessary for the boiler plant in the preceding example based on a 50 per cent overload.

The volume of gases generated per minute is: $\frac{7740 \times 482}{60} = 61{,}920$ cu. ft. The static pressure rating of fan to be 1¼" water.

For a constant pressure the ratio between the volume, speed and power required for a temperature of 550° F. and the temperature at which the fan is rated, or 70° F., is: $\sqrt{\frac{460 + 550}{460 + 70}} = 1.38$. Therefore a fan is chosen having a capacity of 61,920/1.38 or 44,870 cu. ft. per min. at 70° F. and 1¼" s.p.

Referring to the fan performance curves, Fig. 12, we find that a No. 10 Sirocco will deliver this amount of air against 1¼" s.p. when running at 240 r.p.m., and requiring 20 brake horsepower.

The speed and horsepower for 550° F. will be 550 × 1.38 or 345 r.p.m. and 20 × 1.38 or 27.6 d.hp. If fan is to be motor-driven, a 30 to 35 hp. motor would be used.

The Prat System of Induced Draft. A type of induced draft popular in Europe and known as the *Prat* system is shown by Fig. 14. The essential features are, the use of a double tapered

chimney, and a fan which does not take all the gases from the boiler, but which may be arranged to cause a draft on the inspirator principle, using either outside air or a part of the flue gases as may be desired.

In the center of the chimney, just below the narrowest part, is fitted a nozzle connected to the fan, the blast through this nozzle causing a suction in the lower part of the chimney. The object of the taper is to give increased section for the outgoing gases, thus decreasing their speed and reducing the pressure at which the gases are discharged into the atmosphere.

FIG. 14. PRAT SYSTEM OF INDUCED DRAFT.

A. Nozzle for Prat System, without diffuser. *B*. Prat System nozzle with diffuser and annular damper. *C*. Cross-section of power plant, showing "out of circuit" and "in circuit" method of installing the Prat System.

In the "out-of-circuit" system the fan draws its air from the outer atmosphere, and in the "in-circuit" system the fan is placed as a shunt to the flue drawing in and discharging into the narrowest portion of the stack a portion of the flue gases.

With the "in-circuit" the fan must handle the hot gases. In practice, the "out-of-circuit" method is used mainly for small installations where there would be little saving in power by the use of the "in-circuit" which is more commonly employed in large plants.

By the "in-circuit" method and the use of an inspirator, the fan employed is of relatively small capacity, being only about one-fifth the size necessary if the fan handled the whole volume of gases.

CHAPTER IX

FEED WATER HEATERS AND FEED WATER PURIFICATION

FEED WATER HEATERS

The primary purpose of a feed water heater is to utilise part of the exhaust steam from an engine or turbine to raise the temperature of the feed water and thereby return a portion of the heat of the exhaust, that might otherwise be wasted, to the boiler. A saving of 10 to 12% in the fuel is readily attained by the addition of a feed water heater in a plant in which cold feed

FIG. 1. OPEN TYPE HEATER.

water is used. The action of a feed water heater is similar to that of a condenser in that the latent heat given up by the exhaust steam, which is condensed, is used to raise the temperature of the water circulated through the apparatus.

The feed water heater serves another useful purpose in as much as it prevents the feeding

of cold water into a boiler and thereby setting up a stress due to unequal expansion of the tubes and plates.

Classification of Feed Water Heaters. The usual classification of heaters using exhaust steam is made according to the method of the heat transfer of the heat in the steam to the feed water and are accordingly known as either the "Open" or "Closed" types.

Open Heaters (Fig. 1). In this class belong all heaters in which the exhaust steam mingles directly with the feed water and whatever amount of steam condensed is returned to the boiler with the feed water. This class of heater requires an efficient oil separator on the exhaust line to prevent cylinder oil being carried into the boiler.

The separator is now being supplied with and made a part of the modern open type heater. The shell of the heater is either constructed of cast-iron ribbed plates or boiler plate and is made either square, rectangular or round. In the latest type of open heater design a cut-out valve is provided as shown by Fig. 2. This arrangement obviates the necessity of any by-pass piping around the heaters which requires the use of three valves in order to cut out the heater for repairs or cleaning.

The upper part of the shell contains a number of removable trays over which the incoming feed water trickles and mingles with the exhaust steam, being heated to a temperature of approximately 200° to 210° when supplied with sufficient exhaust steam. Such scale forming matter as carbonates of lime and magnesia, which will precipitate below this temperature, is deposited on the trays. In the base of the heater a filter bed of charcoal or coke is provided through which the water must pass on its way to the boilers, for the further removal of such precipitate and impurities that can be removed by filtration. This type of heater is often referred to as a *feed water heater and purifier*. A feed water metering device as a part of the heater may now be obtained, the meter being of the V notch weir type with automatic recording device, Fig. 3.

FIG. 2. DIAGRAM SHOWING CUT-OUT VALVES IN OPEN POSITION.

The admission of feed water is controlled by a valve operated by a float located within the heater, an overflow pipe being provided to prevent flooding in case the float should fail to work.

The feed pump in connection with the open heater must be located between the heater and boiler and should be placed a sufficient depth below the heater to always be primed as the pump must handle hot water.

Unless the heater is supplied from a pressure main, *an additional pump* will be required to draw water from the sump, hot well or other source of supply and deliver it to the heater.

Economy of Heating Feed Water. Economy due to feed water heating is an important item in power plant operation and for this reason few plants are constructed without heaters. Roughly speaking, for every 11 degrees the feed water is heated by exhaust steam otherwise wasted produces a saving of 1% in the fuel required. This, however, does not take into account the initial cost of heater, interest, depreciation, attendance and repairs that must necessarily follow any installation of apparatus to cause a saving.

$i_s = r_2 + q_2$ = heat content in one pound of dry saturated steam above 32° F.

t_1 = temp. of the cold water.

t_2 = temp. of water leaving heater.

q_1 = heat of the liquid at t_1° F.

q_2 = heat of the liquid at t_2° F.

The per cent saving in fuel is:

$$S = 100 \times \frac{(q_2 - q_1)}{(q_2 + r_2) - q_1} = 100 \times \frac{t_2 - t_1}{i_2 - q_1} \text{ (approximately). See Table I.}$$

Example. Find the per cent saving due to a rise in temperature of the feed water from 60° F. to 210° F., boiler pressure 160 lb. per sq. in.

$q_2 = 178$ B.t.u.
$q_1 = 28$ B.t.u.

The heat content (i) in steam at 160 lb. per sq. in. pressure gage or 175 lb. absolute = 1195.9 B.t.u. Then

$$S = \frac{178 - 28}{1196.9 - 28} \times 100 = 12.8\%$$

or 1% for each 11.6° the feed water is raised in temperature.

Final Temperature of Feed Water. The final temperature to which feed water may be

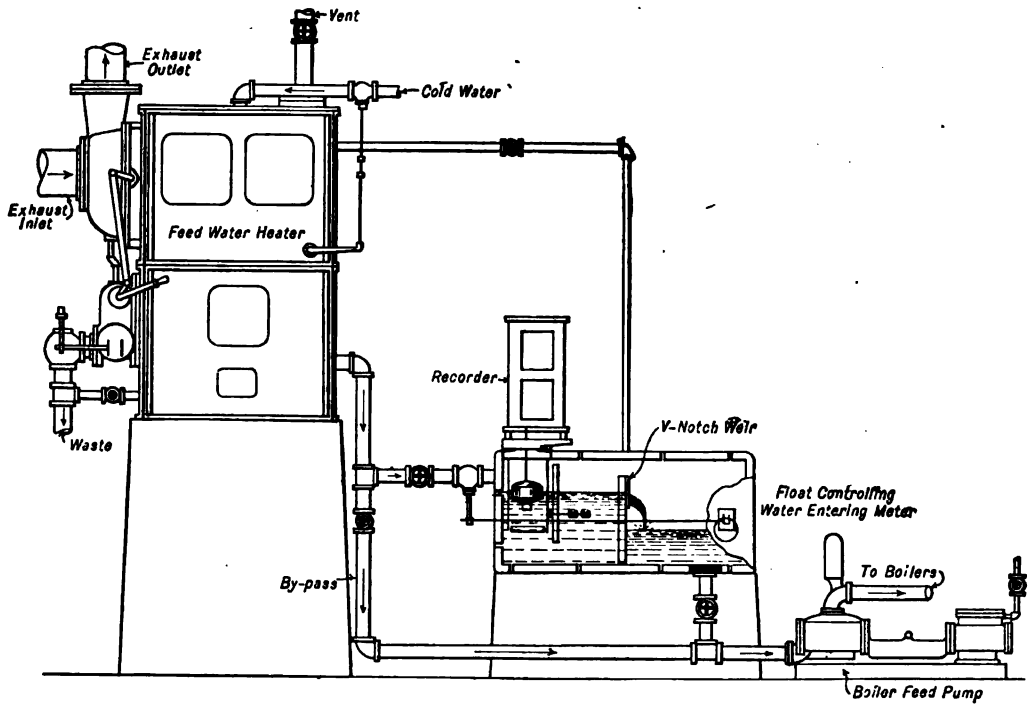

FIG. 3. DIAGRAM SHOWING PRINCIPLE OF THE COCHRANE COMBINED OPEN FEED WATER HEATER AND METER.

raised depends upon the amount of exhaust steam available for this purpose, the initial temperature of the feed water and the temperature of the exhaust steam.

The temperature of the exhaust will depend upon the back pressure carried. With the open type of heater, the pressure in the heater is ordinarily atmospheric, corresponding to a temperature of 212°. Except in the case of a non-condensing plant in which the excess exhaust is used in a heating system, in which event it rarely ever exceeds 5 pounds, corresponding to a

temperature of approximately 227° F. In the closed type of heater, the final temperature that may be obtained is less for the same back pressure owing to the fact that the heat transmission of the tubes becomes impaired by scale and frequently an insufficient amount of heating surface is supplied. The final temperature of the feed water with closed heaters is rarely ever more than 200° with atmospheric exhaust and 210° with open heaters.

Final Temperature of Feed Water in a Condensing Plant. *Open Heater Supplied by Exhaust from the Auxiliaries.* An approximation for the quantity of steam used by the auxiliaries can be taken as 10% of the total steam used by the main engines in the plant. The radiation loss and other losses can be assumed as 10%. The final temperature of the feed water for any given conditions may be estimated as follows:

Let $(q + xr)$ = heat content above 32° in one pound of the exhaust steam corresponding to the pressure maintained in the heater.

q_1 = heat in the water entering the heater, per lb.
q_2 = heat in the water leaving the heater, per lb.
w = wt. of exhaust or auxiliary steam available per hour, lb.
x = quality of steam entering the heater.
W = wt. of feed water used by main units.

Heat entering heater above 32° = $[Wq_1 + w\,(q + xr)]\,0.9$.
Heat leaving heater above 32° = $(W + w)q_2$

$$q_2 = \frac{(q + xr)\,w + Wq_1}{(W + w)} \times 0.9$$

Approximately $q_2 = (t_2 - 32)$

Then
$$t_2 = \frac{[(q + xr)\,w + Wq_1] \times 0.9}{(W + w)} + 32$$

For preliminary calculations the value of x may be taken as 1 for exhaust steam and $w = 0.10W$.

TABLE 1

PERCENTAGE OF SAVING FOR EACH DEGREE OF INCREASE IN TEMPERATURE OF FEED WATER HEATED

Initial Temp. of Feed	Pressure of Steam in Boiler, Lb. per Sq. In. Above Atmosphere											Initial Temp. of Feed
	0	20	40	60	80	100	120	140	160	180	200	
32°	0.0872	0.0861	0.0855	0.0851	0.0847	0.0844	0.0841	0.0839	0.0837	0.0835	0.0833	32°
40°	.0878	.0867	.0861	.0856	.0853	.0850	.0847	.0845	.0843	.0841	.0839	40°
50°	.0886	.0875	.0868	.0864	.0860	.0857	.0854	.0852	.0850	.0848	.0846	50°
60°	.0894	.0883	.0876	.0872	.0867	.0864	.0862	.0859	.0856	.0855	.0853	60°
70°	.0902	.0890	.0884	.0879	.0875	.0872	.0869	.0867	.0864	.0862	.0860	70°
80°	.0910	.0898	.0891	.0887	.0883	.0879	.0877	.0874	.0872	.0870	.0868	80°
90°	.0919	.0907	.0900	.0895	.0888	.0887	.0884	.0883	.0879	.0877	.0875	90°
100°	.0927	.0915	.0908	.0903	.0899	.0895	.0892	.0890	.0887	.0885	.0883	100°
110°	.0936	.0923	.0916	.0911	.0907	.0903	.0900	.0898	.0895	.0893	.0891	110°
120°	.0945	.0932	.0925	.0919	.0915	.0911	.0908	.0906	.0903	.0901	.0899	120°
130°	.0954	.0941	.0934	.0928	.0924	.0920	.0917	.0914	.0912	.0909	.0907	130°
140°	.0963	.0950	.0943	.0937	.0932	.0929	.0925	.0923	.0920	.0918	.0916	140°
150°	.0973	.0959	.0951	.0946	.0941	.0937	.0934	.0931	.0929	.0926	.0924	150°
160°	.0982	.0968	.0961	.0955	.0950	.0946	.0943	.0940	.0937	.0935	.0933	160°
170°	.0992	.0978	.0970	.0964	.0959	.0955	.0952	.0949	.0946	.0944	.0941	170°
180°	.1002	.0988	.0981	.0973	.0969	.0965	.0961	.0958	.0955	.0953	.0951	180°
190°	.1012	.0998	.0989	.0983	.0978	.0974	.0971	.0968	.0964	.0962	.0960	190°
200°	.1022	.1008	.0999	.0993	.0988	.0984	.0980	.0977	.0974	.0972	.0969	200°
210°	.1033	.1018	.1009	.1003	.0998	.0994	.0990	.0987	.0984	.0981	.0979	210°
220°		.1029	.1019	.1013	.1008	.1004	.1000	.0997	.0994	.0991	.0989	220°
230°		.1039	.1031	.1024	.1018	.1012	.1010	.1007	.1003	.1001	.0999	230°
240°		.1050	.1041	.1034	.1029	.1024	.1020	.1017	.1014	.1011	.1009	240°
250°		.1062	.1052	.1045	.1040	.1035	.1031	.1027	.1025	.1022	.1019	250°

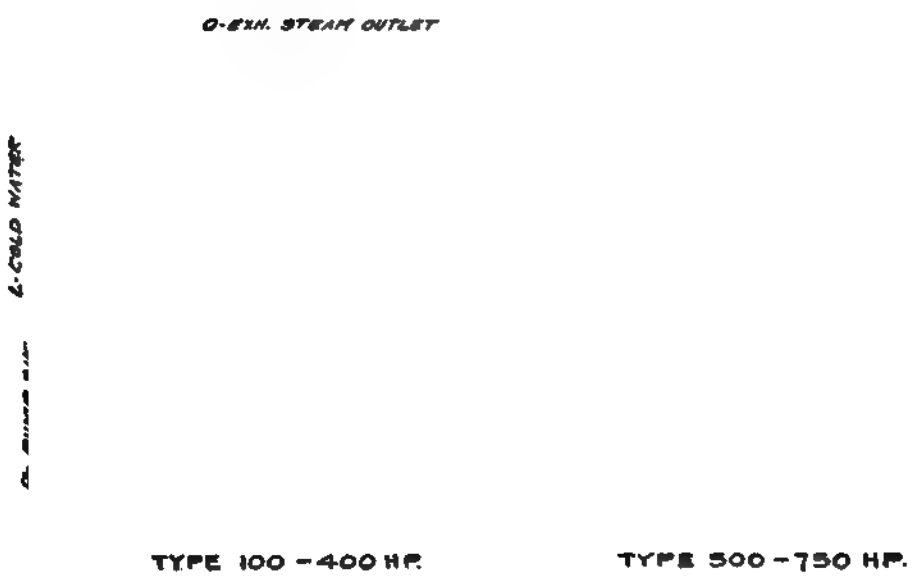

FIG. 4. OPEN FEED WATER HEATERS.

TABLE 2

OPEN-TYPE FEED WATER HEATERS. (See Fig. 4.)

DIAMETER OF PIPE CONNECTIONS, ETC.

Horse-power	Exhaust Inlet	Exhaust Outlet	Main Water Inlet	Live Steam Drips Inlet	Return Inlet from Heating Coils	Feed Pump Suction	Overflow	Blow-off and Drain	Drain from Oil Sep'r
	N	O	L	Y	X	P	M	B	S
100	5″	5″	1″	1″	1¼″	2″	1½″	1″	¾″
150	6″	6″	1¼″	1¼″	1½″	2½″	2″	1″	1″
200	6″	6″	1½″	1½″	1½″	2½″	2″	1″	1″
300	7″	7″	1½″	2″	2″	3″	2″	1″	1″
400	8″	8″	2″	2″	2″	3½″	2½″	1″	1″
500	8″	8″	2″	2″	2½″	4″	2½″	1¼″	1″
750	10″	10″	2½″	3″	3″	5″	3″	1½″	1″

DIMENSIONS OF HEATERS

	A	C	D	E	F	G	H	I	J	W
100	4′ 9″	4′ 2″	1′ 10¼″	1′ 0″	18″	18″	5′ 2″	1′ 6¼″	15¼″	3′ 3″
150	4′ 9″	4′ 2″	2′ 0¼″	1′ 0¼″	18″	18″	5′ 2¼″	1′ 7″	17½″	3′ 5″
200	5′ 1″	4′ 6″	2′ 2¼″	1′ 2¼″	18″	18″	5′ 8¼″	1′ 8¼″	18¼″	3′ 6¼″
300	5′ 1″	4′ 6″	2′ 6½″	1′ 3″	18″	18″	5′ 9″	1′ 11½″	21″	4′ 1″
400	5′ 8″	4′ 10½″	2′ 9″	1′ 4½″	18″	18″	6′ 3″	2′ 2″	22½″	4′ 3½″
500	5′ 4″	4′ 9″	3′ 1″	3′ 1″	12″	10″	6′ 3″	2′ 3½″	24¼″	3′ 7″
750	5′ 7″	4′ 9″	3′ 9″	3′ 1″	15″	10″	6′ 3″	2′ 3½″	30″	4′ 5″

FIG. 5. OPEN FEED WATER HEATERS.

TABLE 3

OPEN-TYPE FEED WATER HEATERS (See Fig. 5.)

DIAMETERS OF PIPE CONNECTIONS, ETC.

Horse-power	Exhaust Inlet	Exhaust Outlet	Main Water Inl.	Live Steam Drips Inlet	Inlet from Heating Coils, etc.	Feed Pump Suction	Overflow	Blow-off and Drain	Drain from Oil Sep'r
	N	■	L	Y	X	F	M	B	S
1000	12″	12″	8″	4″	4″	6″	4″	2″	1″
1250	12″	12″	8″	4″	4″	6″	4″	2″	1″
1500	14″	14″	8½″	4″	4″	7″	4″	2″	1″
2000	14″	14″	8½″	4″	4″	7″	4″	2″	1″
2500	16″	16″	4″ ″	4″	4″	7″	4½″	2″	1″
3000	16″	16″	4″	5″	5″	8″	5″	2″	1″

DIMENSIONS OF HEATERS

	A	C	D	D_1	E	F	G	H	I	J	W
1000	6′ 7½″	3′ 1″	3′ 1″	5′ 9″	19″	15″	13½″	6′ 3″	3′ 9¾″	3′ 7″	7′ 10″
1250	6′ 7½″	4′ 3″	3′ 1″	7′ 1″	19″	15″	13½″	6′ 3″	4′ 2″	4′ 4½″	8′ 7″
1500	6′ 8″	3′ 9″	3′ 9″	7′ 1″	21″	15″	11″	6′ 3″	4′ 4″	4′ 5″	9′ 0″
2000	6′ 8½″	4′ 6″	4′ 9″	7′ 1″	21″	15″	11″	6′ 3″	4′ 4″	4′ 5″	9′ 0″
2500	6′ 9″	4′ 7″	4′ 9″	7′ 1″	20″	15″	11″	6′ 3″	4′ 3″	4′ 7″	9′ 0″
3000	7′ 2″	5′ 6″	4′ 9″	8′ 11″	15″	10″	11″	6′ 9″	5′ 6½″	5′ 6″	11′ 5½″

Let R = ratio of the weight of exhaust steam from auxiliaries per hour to the total weight of feed water or steam generated by boilers per hour

$$= \frac{w}{W + w}$$

$$t_2 = 0.9\,[q + xr)R + (1 - R)\,q_1] + 32.$$

If $x = 1$, then $t_2 = 0.9\,[iR + (1 - R)\,q_1] + 32.$

Example. Assuming an initial temperature of feed water 90° F., ($q_1 = 58$); weight of steam used by auxiliaries, $w = 1{,}000$ lb. per hour. Weight of steam used by main unit, $W = 10{,}000$ lb. per hour.

Then $$R = \frac{w}{W + w} = 0.091.$$

Assuming $x = 1$, then $t_2 = 0.9\,[1151.7 \times 0.091 + (1 - 0.091)\,58] + 32 = 174°$ F.

The *maximum temperature* to which the feed water may be heated in an open heater is approximately 210° F. with atmospheric exhaust. With an initial temperature of feed water of 60°, ($q_1 = 28$) and $t_2 = 210°$, we find that $R = 0.15$. That is, only 15% of the total exhaust steam in a non-condensing plant is necessary to heat the feed water to the maximum temperature with 60 degrees feed water. Any excess exhaust above this amount is available for heating or process work.

Exhaust Steam Available for Heating in Non-condensing Plants. In non-condensing plants where the exhaust steam is used for low-pressure heating the back pressure carried on the heater should not ordinarily exceed 5 lb. gage and with a properly designed vacuum system of heating the back pressure should not exceed 2 lb. gage.

If the condensation from the radiation is returned to the heater a temperature of approximately 150 degrees may be assumed for the initial temperature t_1 of the feed water. This will ordinarily provide for the lowering of the temperature of the condensate by the introduction of the cold make-up water to offset the loss by leakage in the heating system.

The weight of exhaust steam condensed in the feed water heater and the weight available for heating and process work may be estimated by the following formula:

FIG. 6. OTIS STEAM-TUBE FEED WATER HEATER.

Let F = weight of exhaust steam condensed in the feed water heater per hour.
$W + w - F$ = weight of exhaust steam available for heating per hour.

$$F = \frac{(W + w)\,(q_2 - q_1)}{0.9\,(xr + q - q_1)} \text{ lb.}$$

For $x = 1$ $$F = \frac{(W + w)\,(t_2 - t_1)}{0.9\,(i - t_1 + 32)}, \quad f = \frac{t_2 - t_1}{0.9\,(i - t_1 + 32)}.$$

The percentage of the total weight of exhaust steam condensed in the feed water heater per lb. of exhaust is $100f$ per cent, and the percentage available for heating is $100\ (1 - f)$.

Example. Assume that a back pressure of 2 lb. gage is carried on the heater and that the initial temperature of the feed water $t_1 = 150$. For 2 lb. gage (16.7 lb. abs.) $t_2 = 219°$ F., $i = 1154$,

$$f = \frac{100\ (219 - 150)}{0.9\ (1154 - 150 + 32)} = 7.8\%.$$

The percentage of the total exhaust available for heating, by weight, is $100 - 7.8 = 92.2\%$. Practically a deduction of 5 to 10% should be made from the above figure to allow for the condensation in the steam mains to obtain the net weight available at the radiators.

Specifications for Open Type Heater and Receiver with Provision for Purifying the Surplus Exhaust Steam Passing to the Heating System. The heater is to have ample capacity for heating the water required for..... hp. of boilers, including such overload as may be carried on the boilers, taking the initial supply at 50° F. and delivering it at a temperature within from 2 to 5° of the temperature of the steam entering the heater, when the heater is kept filled with steam.

TABLE 4

DIMENSIONS OF THE VERTICAL OTIS CLOSED TYPE HEATER

Number of Heater (Size of Exhaust)	Horse-power	Size in Inches	Number of Tubes	Sq. Ft. Heating Surface	Dia. Feed Pipe, Inches	Weight
4	30	15 x 48	14	16	1¼	560
A4	40	15 x 60	14	23	1¼	620
B4	50	15 x 72	14	30	1½	680
C4	60	15 x 84	14	36	1½	740
6	100	20 x 72	24	53	1½	1,090
A6	125	20 x 84	24	66	1½	1,170
B6	150	20 x 96	24	80	1½	1,260
7	160	25 x 72	48	83	2	1,540
A7	200	25 x 84	48	105	2	1,670
8	250	25 x 96	48	150	2	1,790
A8	300	25 x 108	48	170	2	1,920
9	350	30 x 108	52	176	2½	2,480
A9	400	30 x 120	52	205	2½	2,630
10	450	35 x 120	52	225	3	3,400
A10	500	35 x 132	52	257	3	3,600
B10	550	35 x 144	52	290	3	3,800
12	600	40 x 132	60	319	3½	6,500
A12	700	40 x 144	60	361	3½	6,750
B12	800	40 x 156	60	403	3½	7,000
16	900	45 x 144	56	444	4	9,400
A16	1,000	45 x 156	56	494	4	9,800
B16	1,100	45 x 168	56	551	4	9,900
18	1,150	54 x 144	86	568	5	14,400
A18	1,250	54 x 156	86	643	5	14,900
B18	1,400	54 x 168	86	720	5	15,400
C18	1,500	54 x 180	86	796	5	15,900
D18	1,700	54 x 192	86	872	5	16,400

NOTE.—The horizontal types have same diameter as the vertical, but are a few inches shorter. The number given to the heater in the table is the largest diameter of exhaust pipe the heater is adapted for. The heating surface given is the actual heating surface of the tubes and water separater.

The heater is to have a water storage capacity below overflow level of not less than ..... cu. ft. With the heater is to be furnished an oil separator of approved design (self-cleaning type) and of ample capacity for purifying exhaust steam to an amount equivalent to the full rated capacity of the heater, namely ..... boiler hp. Also, such trap or traps as may be necessary for draining the oil separator and taking care of the overflow from the heater, the valve area of the trap to be not less than the full area of drip pipe from the separator, that is, the area of the valve in the steam trap is to be not less than the area of a ..... inch pipe.

The heater is to be a unitary structure comprising a heater and separator, and means for controlling the passage of steam between the separator and the heater, all so arranged that the heater can be isolated or cut off, for examination or cleaning, from the path of steam to the

heating system or to atmosphere. The separator is to continue in operation when the heater is cut out, at which times the drainage of the separator is to continue independently of the overflow drainage.

The heater is likewise to be provided with readily removable cast-iron trays, cold-water regulating valve and float for controlling the admission of the cold water supply under a pressure on the cold water supply line of from 10 to 30 lb. Suitable provision is also to be made so that filtering or depositing material may be carried within the heater under downward filtration. Pump supply is to be hooded and vented to steam space.

Closed Heaters. A closed heater consists of a circular shell in which are placed a number of straight or curved tubes, usually seamless brass. If the exhaust steam surrounds the tubes, the feed water passing through the tubes, it is known as a *water-tube* type of closed heater. If the reverse is true, it is known as a *steam-tube* heater.

The closed type of feed water heater is sometimes employed in a condensing plant by placing it in the exhaust line between the engine or turbine and the condenser. When used in this connection it is frequently termed a *primary heater* or *vacuum heater*. The feed water after having passed through the primary heater is delivered to either an open or closed type of heater, to which the exhaust from the auxiliaries is delivered. The temperature to which the water may be raised in the primary heater will be approximately 10° lower than the temperature of the exhaust steam, which for a 26″ vacuum is 116° F. The final temperature of the water leaving the primary heater will probably not exceed 105° for this degree of vacuum. The closed heater is also used for heating purposes in connection with forced hot-water circulating systems, as described in the Chapter on "District Heating," Volume I.

As the steam and water are never in direct contact with one another, the efficiency of this type depends upon the amount of heating surface and its conductivity.

Closed heaters are often spoken of as having a rated horsepower. This is a commercial rating and is usually based on ⅛ sq. ft. of heating surface per boiler horsepower. Heaters should not be purchased on this rating, but upon the sq. ft. of heating surface required to transmit the necessary amount of heat to raise the temperature of the feed water a given amount. With the closed type of heater one feed pump only is required.

The size of a closed heater will depend upon the rate of conductivity of the metal used in

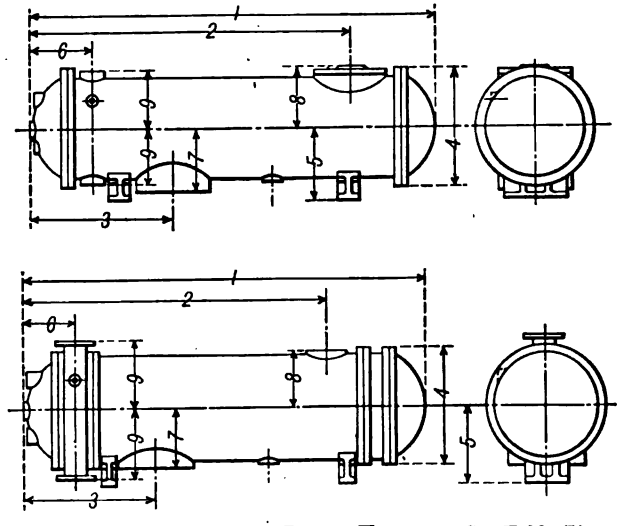

FIG. 7. DIMENSIONS OF CLOSED HEATERS. (See Table 5.)

TABLE 5

DIMENSIONS OF WAINWRIGHT FEED WATER HEATER—HORIZONTAL PATTERN

ALL DIMENSIONS IN INCHES

No.	Rating in B.Hp.	1	2	3	4	5	6	7	8	9	Exhaust Inlet				Air Vent				Feed Inlet and Outlet				Safety Valve	Drain	Blow-off
											Size	Flange Diam.	Bolt Circle	Studs	Size	Flange Diam.	Bolt Circle	Bolts	Size	Flange Diam.	Bolt Circle	Bolts			
2x	50	36	23¾					7½			3				1½	Screwed			1¼	Screwed			½	¾	1
3x	75	41¾	29½																						
4x	100	44¾	32½	17½	14¾	9½	7¼		7	6															
5x	125	60¼	48					6¾			4	9	7½	4– ⅝					1½						
6x	150																								
7x	200	63½	49	20	17	9½	9	8½	8 7/16	7	5	10	8½	8– ⅝	2				2				¾	1	1¼
8x	250																								
9x	300	68½	53¼																						
10x	350	80	64¾	22¼	20	11⅜	11⅜	9½	9½	8¼	6	11	9½	8– ⅝	2½				2½						
11x	400	86	70¾																						
12x	500	86¾	70⅛	27⅛	23½	12⅝	12⅝	11½	10½	9½	8	13½	11¼	8– ⅝	3				3						
13x	600	92¾	76⅛																						
14x	700	82	64	28½		13⅜	12¼	12½	11½	10¼														1½	
15x	800	88	70																						
16x	900	88 11/16	69	30½	27½	14¼	12¾	13¼	13	11½	10	16	14¼	12– ¾	3½	8½	7	4–½					1	2	1½
17x	1,000	94 11/16	75																						
18x	1,100	93¾	74	33	28⅜	15¼	15¼	14	14	12⅛															
19x	1,200	99¾	80																						
20x	1,300	81⅜	62⅜																						
21x	1,400	87⅜	68⅜	29½	30	16⅜	10⅞	15	13⅜	17¾	12	19	17	12– ¾	4	9	7½	4–⅝	4	10	7⅞	8–¾		2½	2
22x	1,500	93⅜	74⅜																						
23x	2,000	101	72⅞	40⅜	39	20	17½	17¼	16½	22¼	14	21	18¾	12– ⅛	5	10	8½	8–⅝					1¼		
24x	2,250	98¼	71¾	39¼		21	15⅛	19⅛	17⅜	22⅜									5	11	9¼	8–¾		3	
25x	3,000	95⅜	69¾	38¼	44½	23½	14¾	20½	19½	24 11/16	16	23½	21¼	16– ⅞	6	11	9½	8–⅝							
26x	4,000	101¾	71⅛	45½	50	27	17¾	23⅝	21¾	27 11/16	18	25	22¾	16–1	8	13½	11¼	8–⅝	6	12½	10⅝	12–¾	1½		2½
27x	5,000	115¾	85⅛								20	27½	25	20–1											
28x	6,000	118¼	88⅛	46⅜	51	28	16½		22¾	28 7/16															

TABLE 6

GENERAL DATA AND APPROXIMATE NET SELLING PRICES FOR FEED WATER HEATERS

Open Type—For use with exhaust steam

TABLE 7

GENERAL DATA AND APPROXIMATE NET SELLING PRICES FOR FEED WATER HEATERS

Closed Type—For use with exhaust steam

the tubes, which in turn is dependent upon the rate of flow of the water and the number of passes the water makes through the heater.

The conductivity taken from experiments by various authorities has been found to be approximately as follows:

Let U = B.t.u. transmitted to the feed water per sq. ft. of surface per hour per degree difference in the average temperature of the steam and feed water.
Average values for U:

Multiple-flow heaters, velocity of water	50 ft. per minute.
Plain copper tubes	250 B.t.u.
Corrugated copper tubes	300 B.t.u.
Single-flow heaters, velocity of water	12.5 ft. per minute.
Plain brass tubes	175 B.t.u.
Coil-pipe heaters, velocity of water	150 ft. per min.
Plain copper tubes	300 B.t.u.
For steam-heated tubes	
Plain iron tubes	120 B.t.u.

TABLE 8

GENERAL DATA AND APPROXIMATE NET SELLING PRICES FOR FEED WATER HEATERS

Open Type—For power plants operating steam-heating systems

Horsepower rating	50	75	100	150	200	300	450	600	900	1200	1600	2000	2500
Pounds of feed water heated per hour	1500	2250	3000	4500	6000	9000	13500	18000	27000	36000	48000	60000	75000
Weight in pounds	1550	1750	1850	2700	3000	4300	5850	6750	8150	11000	12000	18000	14500
Net price f. o. b. factory	$136	155	183	239	290	348	440	545	695	865	1050	1190	1330
Width, inches	34	36	38	41	43	48	52	56	85	94	96	98	100
Depth, inches	25	27	29	32	34	38	43	47	43	47	53	59	67
Height, inches	67	71	75	66	75	81	87	93	87	93	93	93	93
Dia. ins. exh. inlet and outlet—any size up to	4	5	6	7	8	9	10	12	14	16	18	20	20
Dia. ins. cold water supply	¾	1	1	1¼	1¼	1½	2	2	2½	3	3	3½	3½
Dia. ins. pump suction	1½	2	2	2½	3	3	4	4	5	5	6	6	7
Dia. ins. waste and overflow	1½	1½	2	2	2½	2½	3	3½	4	4½	4½	5	5
Diameter gravity returns	1½	2	2	2½	3	4	4	5	5	6	7	8	8
Number of trays	4	4	4	5	5	5	10	10	20	20	40	40	40
Length per tray, inches	17	19	21	22	24	28	32	36	32	36	21	24	28
Width per tray, inches	11	13½	15	15	16½	21	10½	12	10½	12	12	12	12

These heaters, while performing all the functions of an open heater for the power plant, are also designed to receive and to heat the condensation returned from a steam-heating system. It will be noted that this double service requires a somewhat larger heater than that required for the service of the following table.

Prices are net f. o. b. New York City and may be safely used for estimating and valuation purposes. To cover freight, add 75 cents per hundredweight for every 1,000 miles from New York.

To select the proper heater from this table, utilise the approximation method outlined below following table, but add to the amount determined the water required for the steam-heating system. Consider that the size of the heater is governed by the total quantity of water which must be passed through the heater in a given time. Consider, further, that while the water in the steam-heating system is practically a constant quantity in continuous circulation, it is subject to losses consisting of leakage, evaporation, drain-off, etc. These losses must be made up by the supply of additional water from the cold well.

In closed heaters the temperature of the water and the temperature of the steam can never be equal, and for practical purposes may be taken as $t_2 = t_s - 10$, where t_s = temperature of steam and t_2 = temperature of water leaving the heater.

Let t_1 = temperature of water entering the heater.
t_s = temperature of steam entering the heater.
t_2 = temperature of water leaving the heater.
A = sq. ft. of transmitting surface.
d = mean difference in temperature between steam and feed water.
W = wt. of feed water heated per hour in lb.

Then $A\,U\,d = W\,(t_2 - t_1)$

$$A = \frac{W(t_2 - t_1)}{Ud}$$

$d = t_s - \dfrac{(t_1 + t_2)}{2}$ approximate, but near enough for practical purposes.

Then $$A = \frac{W(t_2 - t_1)}{U\left(t_s - \dfrac{t_1 + t_2}{2}\right)}$$

FEED WATER PURIFICATION

Natural waters all contain some impurities, which are either soluble, insoluble or both. The impurities are divided into two general classes, incrusting and non-incrusting. The former is composed principally of the lime and magnesia salts and all suspended matter; the latter includes only the sodium salts. When the water is evaporated into steam all of the impurities, including the suspended matter, is left in the boiler. After a period the concentration becomes so great that the scale-forming impurities crystallize and are deposited in the boiler along with the suspended matter in the form of sludge or scale.

The effect produced on the boiler, if the impurities are not removed, is: (1) a reduction in the heat transmission of the boiler heating surface and, therefore, a reduced steaming capacity and fuel waste; (2) the liability of overheating the tubes and plates, thus producing a dangerous condition of operation. The salts usually responsible for incrustation are the carbonates and sulphates of lime and magnesia, and boiler feed treatment in general deals with the getting rid of these salts more or less completely. The table on page 221, by *W. W. Christie*, gives an approximate classification of impurities found in feed waters, their effect and the remedy or means for overcoming the effect produced.

Treatment of Feed Water. The following matter has been taken, in part, from "Steam" (*Babcock and Wilcox Co.*).

Scale Formation. The treatment of feed water carrying scale-forming ingredients is along two main lines: 1st, by chemical means by which such impurities as are carried by the water are caused to precipitate; and, 2nd, by the means of heat, which results in the reduction of the power of water to hold certain salts in solution. The latter method alone is sufficient in the case of certain temporarily hard waters, but the heat treatment, in general, is used in connection with a chemical treatment to assist the latter.

Before going further into detail as to the treatment of water, it may be well to define certain terms used.

Hardness, which is the most widely known evidence of the presence in water of scale-forming matter, is that quality the variation of which makes it more difficult to obtain a lather or suds from soap in one water than in another. This action is made use of in the soap test for hardness described later. Hardness is ordinarily classed as either temporary or permanent. Temporarily hard waters are those containing carbonates of lime and magnesium, which may be precipitated by boiling at 212° and which, if they contain no other scale-forming ingredients, become "soft" under such treatment. Permanently hard waters are those containing mainly calcium sulphate, which is only precipitated at the high temperatures found in the boiler itself, 300° F. or more. The scale of hardness is an arbitrary one, based on the number of grains of solids per gallon, and waters may be classed on such a basis as follows: 1–10 grains per gallon, soft water; 10–20 grains per gallon, moderately hard water; above 25 grains per gallon, very hard water.

Alkalinity is a general term used for waters containing compounds with the power of neutralizing acids.

Causticity, as used in water treatment, is a term coined by *A. McGill*, indicating the pres-

ence of an excess of lime added during treatment. Though such presence would also indicate alkalinity, the term is arbitrarily used to apply to those hydrates whose presence is indicated by phenolphthalein.

Chemical Treatment. Of the chemical methods of water treatment, there are three general processes:

1st. *Lime Process.* The lime process is used for waters containing bicarbonates of lime and magnesia. Slaked lime in solution, as lime water, is the reagent used. This combines with the carbonic acid which is present, either free or as carbonates, to form an insoluble monocarbonate of lime. The soluble bicarbonates of lime and magnesia, losing their carbonic acid, thereby become insoluble and precipitate.

2nd. *Soda Process.* The soda process is used for waters containing sulphates of lime and magnesia. Carbonate of soda and hydrate of soda (caustic soda) are used either alone or together as the reagents. Carbonate of soda, added to water containing little or no carbonic acid or bicarbonates, decomposes the sulphates to form insoluble carbonate of lime or magnesia which precipitate, the neutral soda remaining in solution. If free carbonic acid or bicarbonates are present, bicarbonate of lime is formed and remains in solution, though under the action of heat the carbon dioxide will be driven off and insoluble monocarbonates will be formed. Caustic soda used in this process causes a more energetic action, it being presumed that the caustic soda absorbs the carbonic acid, becomes carbonate of soda and acts as above.

Trouble	Cause	Remedy or Palliation
Incrustation	Sediment, mud, clay, etc.	Filtration.
		Blowing off.
	Readily soluble salts	Blowing off.
	Bicarbonate of magnesia, lime, iron	Heating feed and precipitate.
		Caustic soda.
		Lime
		Magnesia.
	Organic matter	See organic matter under corrosion.
	Sulphate of lime	Sodium carbonate.
		Barium chloride.
Corrosion	Organic matter	Precipitate with alum
		Precipitate with ferric chloride } and filter.
	Grease	Slaked lime } and filter.
		Carbonate of soda }
	Chloride or sulphate of magnesium	Carbonate of soda.
	Sugar	Alkali.
	Acid	
Priming	Dissolved carbonic acid and oxygen	Slaked lime.
		Caustic soda.
		Heating.
	Electrolytic action	Zinc plates.
	Sewage	Precipitation with alum or ferric chloride and filter.
	Alkalies	Heating feed and precipitate.
	Carbonate of soda in large quantities	Barium chloride.

3rd. *Lime and Soda Process.* This process, which is the combination of the first two, is by far the most generally used in water purification. Such a method is used where sulphates of lime and magnesia are contained in the water, together with such quantity of carbonic acid or bicarbonates as to impair the action of the soda. Sufficient soda is used to break down the sulphates of lime and magnesia and as much lime added as is required to absorb the carbonic acid not taken up in the soda reaction.

All of the apparatus for effecting such treatment of feed waters is approximately the same in its chemical action, the numerous systems differing in the methods of introduction and handling of the reagents.

Heat Treatment. Sediment, mud, clay and all suspended matter may be removed from feed water by filtration. The materials ordinarily used for the filter are coke and excelsior.

Some of the scale-forming matter held in solution, such as bicarbonate of magnesia and lime, may be removed by precipitation by first heating the feed water.

The modern open type heater will heat the feed water to approximately 210° F. and such scale-forming substances as are precipitated below this temperature are deposited on the trays and in the settling chamber. The sulphates of lime and magnesia require a temperature from 290° to 300° F. for complete precipitation and therefore will not be completely removed by an open heater.

Live steam heaters are used for purifying feed water containing the sulphates of lime and magnesia alone or in connection with the bicarbonates. The usual type is fitted with removable trays. The water to be purified discharges into the upper pans and overflows into the lower pans and to the lower part of the heater from which the feed water is drawn. The purifier should be located about two feet above the level of the boiler water line so that the feed water will flow by gravity into the boilers. Live steam purifiers when used are ordinarily operated in conjunction with exhaust steam heaters.

An economizer will also precipitate the sulphates of lime and magnesia when the maintained temperature is 290° F. and above.

Combined Heat and Chemical Treatment. Heat is used in many systems of feed treatment apparatus as an adjunct to the chemical process. Heat alone will remove temporary hardness by the precipitation of carbonates of lime and magnesia and, when used in connection with the chemical process, leaves only the permanent hardness or the sulphates of lime to be taken care of by chemical treatment.

The chemicals used in the ordinary lime and soda process of feed water treatment are common lime and soda. The efficiency of such apparatus will depend wholly upon the amount and character of the impurities in the water to be treated. Table 9 gives the amount of lime and soda required per 1000 gallons for each grain per gallon of the various impurities found in the water. This table is based on lime containing 90 per cent calcium oxide and soda containing 58 per cent sodium oxide, which correspond to the commercial quality ordinarily purchasable. From this table and the cost of the lime and soda, the cost of treating any water per 1000 gallons may be readily computed.

Less Usual Reagents. Barium hydrate is sometimes used to reduce permanent hardness or the calcium sulphate component. Until recently, the high cost of barium hydrate has rendered its use prohibitive, but at the present it is obtained as a by-product in cement manufacture and it may be purchased at a more reasonable figure than heretofore. It acts directly on the soluble sulphates to form barium sulphate, which is insoluble and may be precipitated. Where this reagent is used, it is desirable that the reaction be allowed to take place outside of the boiler, though there are certain cases where its external use is permissible.

Barium carbonate is sometimes used in removing calcium sulphate, the products of the reaction being barium sulphate and calcium carbonate, both of which are insoluble and may be precipitated. As barium carbonate in itself is insoluble, it cannot be added to water as a solution, and its use should, therefore, be confined to treatment outside of the boiler.

Silicate of soda will precipitate calcium carbonate with the formation of a gelatinous silicate of lime and carbonate of soda. If calcium sulphate is also present, carbonate of soda is formed in the above reaction, which in turn will break down the sulphate.

Oxalate of soda is an expensive but efficient reagent which forms a precipitate of calcium oxalate of a particularly insoluble nature.

Alum and iron alum will act as efficient coagulents where organic matter is present in the water. Iron alum has not only this property but also that of reducing oil discharged from surface condensers to a condition in which it may be readily removed by filtration.

Corrosion. Where there is a corrosive action because of the presence of acid in the water or of oil containing fatty acids which will decompose and cause pitting wherever the sludge can find a resting place, it may be overcome by the neutralization of the water by carbonate of soda. Such neutralization should be carried to the point where the water will just turn red litmus paper

blue. As a preventive of such action arising from the presence of the oil, only the highest grades of hydrocarbon oils should be used.

TABLE 9

REAGENTS REQUIRED IN LIME AND SODA PROCESS FOR TREATING 1000 U. S. GALLONS OF WATER PER GRAIN PER GALLON OF CONTAINED IMPURITIES*

	Lime† Pounds	Soda‡ Pounds		Lime† Pounds	Soda‡ Pounds
Calcium Carbonate	0.098	.....	Ferrous Carbonate	0.169	.....
Calcium Sulphate	.....	0.124	Ferrous Sulphate	.070	0.110
Calcium Chloride	.....	.151	Ferric Sulphate	.074	.126
Calcium Nitrate	.....	.104	Aluminum Sulphate	.087	.147
Magnesium Carbonate	.284	.....	Free Sulphuric Acid	.100	.171
Magnesium Sulphate	.079	.141	Sodium Carbonate	.093	.....
Magnesium Chloride	.103	.177	Free Carbon Dioxide	.223	.....
Magnesium Nitrate	.067	.115	Hydrogen Sulphite	.288	.....

* *L. M. Booth Company.*
† Based on lime containing 90 per cent calcium oxide.
‡ Based on soda containing 58 per cent sodium oxide.

Acidity will occur where sea water is present in a boiler. There is the possibility of such an occurrence in marine practice and in stationary plants using sea water for condensing, due to leaky condenser tubes, priming in the evaporators, etc. Such acidity is caused through the dissociation of magnesium chloride into hydrochloride acid and magnesia under high temperatures. The acid in contact with the metal forms an iron salt which immediately upon its formation is neutralized by the free magnesia in the water, thereby precipitating iron oxide and reforming magnesium chloride. The preventive for corrosion arising from such acidity is the keeping tight of the condenser. Where it is unavoidable that some sea water should find its way into a boiler, the acidity resulting should be neutralized by soda ash. This will convert the magnesium chloride into magnesium carbonate and sodium chloride, neither of which is corrosive but both of which are scale-forming.

The presence of air in the feed water which is sucked in by the feed pump is a well-recognized cause of corrosion. Air bubbles form below the water line and attack the metal of the boiler, the oxygen of the air causing oxidization of the boiler metal and the formation of rust. The particle of rust thus formed is swept away by the circulation or is dislodged by expansion and the minute pit thus left forms an ideal resting place for other air bubbles and the continuation of the oxidization process. The prevention is, of course, the removing of the air from the feed water. In marine practice, where there has been experienced the most difficulty from this source, it has been found to be advantageous to pump the water from the hot well to a filter tank placed above the feed pump suction valves. In this way the air is liberated from the surface of the tank and a head is assured for the suction end of the pump. In this same class of work, the corrosive action of air is reduced by introducing the feed through a spray nozzle into the steam space above the water line.

Galvanic action, resulting in the eating away of the boiler metal through electrolysis, was formerly considered practically the sole cause of corrosion. But little is known of such action aside from the fact that it does take place in certain instances. The means adopted as a remedy is usually the installation of zinc plates within the boiler, which must have positive metallic contact with the boiler metal. In this way, local electrolytic effects are overcome by a still greater electrolytic action at the expense of the more positive zinc. The positive contact necessary is difficult to maintain and it is questionable just what efficacy such plates have except for a short period after their installation when the contact is known to be positive. Aside from protection from such electrolytic action, however, the zinc plates have a distinct use where there is the liability of air in the feed, as they offer a substance much more readily oxidized by such air than the metal of the boiler.

Foaming. Where foaming is caused by organic matter in suspension, it may be largely overcome by filtration or by the use of a coagulant in connection with filtration, the latter combination having come recently into considerable favor. Alum, or potash alum, and iron alum, which in reality contains no alumina and should rather be called potassia-ferric, are the coagulants generally used in connection with filtration. Such matter as is not removed by filtration may, under certain conditions, be handled by surface blowing. In some instances, settling tanks are used for the removal of matter in suspension, but where large quantities of water are required

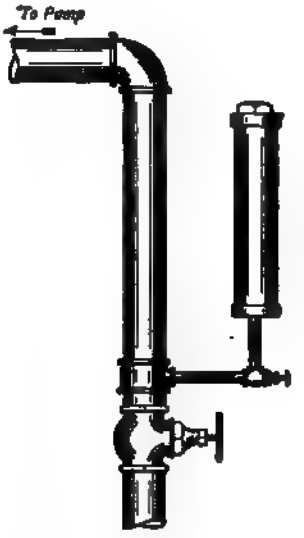

FIG. 8. FIG. 9.

DEVICES FOR FEEDING COMPOUND TO BOILERS.

filtration is ordinarily substituted on account of the time element and the large area necessary in settling tanks.

Where foaming occurs as the result of overtreatment of the feed water, the obvious remedy is a change in such treatment.

Priming. Where priming is caused by excessive concentration of salts within a boiler, it may be overcome largely by frequent blowing down. The degree of concentration allowable before priming will take place varies widely with conditions of operation and may be definitely determined only by experience with each individual set of conditions. It is the presence of the salts that cause priming that may result in the absolute unfitness of water for boiler feed purposes. Where these salts exist in such quantities that the amount of blowing down necessary to keep the degree of concentration below the priming point results in excessive losses, the only remedy is the securing of another supply of feed, and the results will warrant the change almost regardless of the expense. In some few instances, the impurities may be taken care of by some method of water treatment, but such water should be submitted to an authority on the subject before any treatment apparatus is installed.

Boiler Compounds. The method of treatment of feed water by far the most generally used is by the use of some of the so-called boiler compounds. There are many reliable concerns handling such compounds who unquestionably secure the promised results, but there is a great ten-

dency toward looking on the compound as a "cure-all" for any water difficulties, and care should be taken to deal only with reputable concerns.

The composition of these compounds is almost invariably based on soda with certain tannic substances, and in some instances a gelatinous substance which is presumed to encircle scale particles and prevent their adhering to the boiler surfaces. The action of these compounds is ordinarily to reduce the calcium sulphate in the water by means of carbonate of soda and to precip-

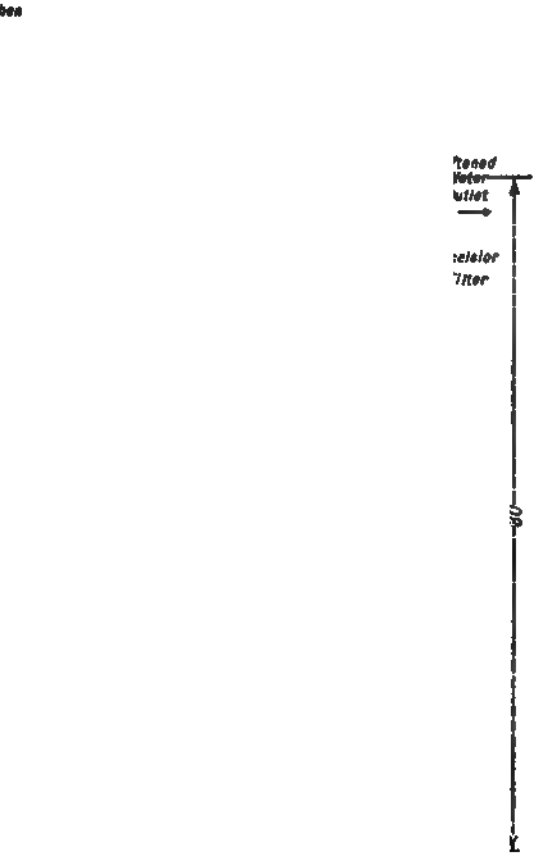

FIG. 10. ARRANGEMENT OF WATER SOFTENING PLANT.

itate it as a muddy form of calcium carbonate which may be blown off. The tannic compounds are used in connection with the soda with the idea of introducing organic matter into any scale already formed. When it has penetrated to the boiler metal, decomposition of the scale sets in, causing a disruptive effect which breaks the scale from the metal sometimes in large slabs. It is this effect of boiler compounds that is to be most carefully guarded against or inevitable trouble will result from the presence of loose scale with the consequent danger of tube losses through burning.

When proper care is taken to suit the compound to the water in use, the results secured are

fairly effective. In general, however, the use of compounds may only be recommended for the prevention of scale rather than with the view to removing scale which has already formed, that is, the compounds should be introduced with the feed water only when the boiler has been thoroughly cleaned.

Water Treating Apparatus. Boiler compounds are ordinarily introduced into the feed water in the suction line to the feed pump as indicated by Fig. 8. A ½-in. nipple is connected into the suction pipe of a pump, on the end of which is an angle valve carrying a short vertical nipple, followed by a reducing coupling. A piece of larger pipe, 2 ft. or more in length, is screwed into this coupling and a cap completes the device and gives a finished appearance to the feeder. If the pump takes water from a well or a brook there is a partial vacuum in the suction pipe; therefore, when the angle valve is opened the atmospheric pressure forces the compound into the suction pipe. Where the supply comes under pressure through the vertical pipe, it is necessary to locate a valve below the feeder, as shown, and this should be partially closed when the compound is to be drawn into the suction or supply pipe.

Fig. 9 illustrates a more elaborate device for the same purpose, to be used in connection with a vertical pipe. The body consists of a piece of pipe large enough to hold the required quantity of compound after it is dissolved or otherwise prepared for use. It is assumed that this is larger than the connecting pipes, which ought to be equal to the suction pipe, therefore a reducing coupling will be required for each end, followed by a nipple and a cross valve, with

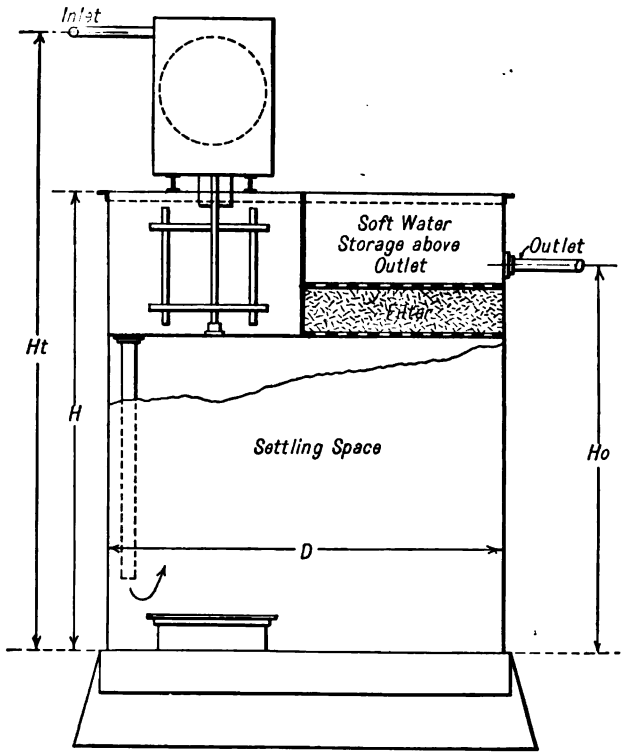

FIG. 11. BOOTH WATER SOFTENER WITH STORAGE SPACE, TYPE "F-14."

TABLE 10

TYPE "F-14" BOOTH WATER SOFTENERS

Capacity Gallons per Hour	D	Ht.	Sg.	Wt.	Price F. O. B. Factory
4,000	12′–0″	26′–0″	2,590	75	$1,950.00
5,000	13′–3″	26′–9″	3,090	93	2,200.00
6,000	14′–6″	26′–9″	3,700	110	2,500.00
7,000	15′–9″	26′–9″	4,370	129	2,800.00
8,000	16′–9″	26′–9″	4,940	146	3,150.00
10,000	18′–9″	27′–3″	6,190	181	3,650.00
12,500	21′–0″	27′–3″	7,770	228	4,150.00
15,000	23′–0″	27′–6″	9,320	272	4,500.00
20,000	26′–6″	27′–6″	12,370	359	5,250.00

Height of main tank, 19′–6″.
Height of outlet at bottom of soft water storage space, 16′–6″.
Sg—Soft water storage capacity above outlet in gallons.
Boiler horsepower = capacity ÷ 4.
Tanks shipped knocked down.
Wt—Weight filled with water in tons.

another valve in the main suction pipe, as shown. This device is operated as follows: When it is to be filled close valves 2 and 3 and open valve 4. Valve 5 should be opened to drain out any water that may remain in the body and then closed again. If the pump is running valve 6 must be open. The device should be filled through the funnel 7, then valve 4 closed, valves 2 and 3 opened, and valve 6 closed in the order mentioned.

Water Treating Plants. There are virtually two styles of water treating plants: the intermittent open and the continuous open. These systems are operated with either warm or cold water. As chemical reaction will take place more rapidly with warm water, consequently this style of plant may be smaller than when cold feed water only is treated. Either style of plant, owing to its size, is ordinarily located outside of the power plant. Fig. 10 shows, in outline, a typical continuous open type water softener designed to handle 8,000 gals. per hour. (*Engineering News*, Aug., 1910.)

The water softener consists of a steel settling tank 14½ ft. in diameter and 30 ft. high, with an iron stairway encircling it from ground level to top. In the top of the settling tank is a small rectangular tank containing the automatic measuring and mixing mechanism for adding the softening solution (lime and soda ash) to the crude water. As a part of this apparatus there is on top of the 30-ft. tower a semicircular tank, always containing about 40 gals. of solution, in the bottom of which is a valve operated by a lever and cam system connected with a tilting bucket.

The tilting bucket is located just beneath the solution tank and has two separate compartments. The crude-water pipe has its discharge just above the tilting bucket so that the crude water flows into one compartment until reaching a certain level. Then the bucket becomes unbalanced, dumps and brings the other compartment under the crude-water discharge. The tilting is again caused in the reverse direction. This rocking works the cam and lever system of the chemical-feed valve so that the requisite chemicals are automatically added. At the same time the contents of the chemical tank are agitated.

The crude water, after receiving the proper amount of softening solution, is thoroughly stirred by a paddle attached to the tipping bucket. With a whirling motion, given to it to hasten the coagulation of precipitated impurities, the water passes through a downtake to the bottom of the settling tank, from which point it gradually rises to the top of the tank. For an added precaution, it is passed through an excelsior or quartz filter from which it flows by gravity to the storage tank.

At the base of the settling tank are located air-tight bins for a month's supply of chemicals, a chemical-mixing and lime-slaking tank, and a specially designed, positive type of water motor that utilizes the crude water for furnishing all the power needed for mixing up the chemicals, for keeping the solution constantly stirred while the plant is in operation and running the pump that delivers the solution from a tank at ground level to the semicircular one at the top of the

NOTE. For first class results the velocity of the water in the settling tank should not exceed fr m 4 to 5 ft. per hour.

softener. A double pipe line connects these two last-mentioned tanks so that the surplus solution required in keeping a constant level in the upper tank may continuously overflow to the lower tank while the plant is operating. The motor requires no free discharge and is operated only by the crude water going to the top of the softener for treatment. The excess water pressure required to operate the motor under full load is from 2½ to 3 lb.—equal to pumping the water an additional height of 6 ft.

The main solution tank on the ground level is designed to contain sufficient softening solution for 12 hours' continuous operation, making attendance oftener than once in that time unnecessary. Opening the water valve at the motor places the entire plant in immediate and automatic operation.

This plant was given a thorough test both in efficacy and in economy of operation. It was found that repeated analyses showed a practically unchanging quality of softened water, and copies of typical analyses given in Table 11 testify to the excellent degree to which the softening process is carried. From analysis No. 2 it is seen that the removal of scale-forming impurities is equal to the elimination of practically one and two-tenths tons of scale from the locomotive boilers each week, with the softener operating the full 24 hours.

TABLE 11

TYPICAL ANALYSES OF FEED WATER AT MAYPORT, FLA.

	No. 1, Untreated Water, Grains per Gal.	No. 2, Water After Treatment, Grains per Gal.
Total solids	18.09	10.80
Calcium carbonate	3.57	0.29
Calcium sulphate	5.33	....
Magnesium carbonate	4.46	1.08
Sodium carbonate	....	0.68
Sodium sulphate	0.70	6.26
Sodium chloride	2.43	2.43
CO_2, free	0.32	....
Iron and silicate	0.33	0.11
Incrusting solids	13.69	1.48*
Non-incrusting solids	3.13	9.32

* The sodium carbonate exists as free alkalinity, being the excess of that used to combine with the sulphates and chlorides of calcium and magnesium. The "non-incrusting solids" are necessarily increased when a raw water contains "hardness" in the form of sulphates or chlorides. "Incrusting solids" in treated water are harmless, provided they are transformed into mono-carbonates. It is impossible to remove, chemically, all the calcium and magnesium as the mono-carbonates are slightly soluble.

CHAPTER X

STEAM ENGINES

Mechanism of the Reciprocating Engine. The working parts of a simple slide-valve engine are shown by Fig. 1.

Steam from the boiler is piped to the steam chest C and admitted to the cylinder through the steam ports P' and P. The driving force of the steam is communicated to the engine crank through the piston, piston rod, crosshead, connecting rod and crank pin.

While the piston moves from one end of the cylinder to the other the crank shaft turns through one-half of a revolution. The piston makes two strokes, one forward and one return, for each revolution of the crank shaft. The distribution of the steam to the cylinder is accomplished by means of the valve D. The action of the valve is to admit steam alternately to each end of the cylinder and on the opposite stroke to allow the expanded steam to escape through the exhaust port J.

Automatic Cut-off Valve Gear (Fig. 2). The valve D alternately uncovers the steam ports P' and P, when the piston has reached the end of its stroke, and allows live steam to flow into the cylinder driving the piston toward the opposite end.

The valve receives its motion from the eccentric E located on the crank shaft, the motion of the eccentric being communicated to the valve by means of the eccentric rod R and valve stem H. The following description of the valve action and steam distribution refers to the head end of the cylinder.

The piston I is shown at the "head end" of the cylinder having nearly reached the end of its travel to the left. At this time the valve D is moving to the right and, for the position of the piston as shown, is ready to uncover the steam port P' and admit live steam back of the piston.

The relative positions of the crank pin and eccentric center, at this time, are shown by the diagram A as 1 and 1′.

The piston continues to move to the left until the end of the stroke is reached while the valve continues to move to the right, and when the piston has reached the end of its travel the valve has partially uncovered the port P'. The object of opening the steam port slightly before the piston has completed its stroke is for the purpose of preventing, as far as possible, a drop in pressure at the beginning of the stroke due to the throttling action of the steam in passing through a restricted opening.

When the piston has moved toward the "crank end" to the line marked "cut off" the relative positions of the crank pin and eccentric center are indicated as 2 and 2′ on the diagram A.

During this portion of the piston stroke the motion of the valve has been reversed, owing to the angular advance of the eccentric center, and the valve returned to the position shown cutting off the steam supply. The steam port remains closed (valve moving to the left) until the piston has reached the point marked "release" in its travel to the right.

At this time the inside edge of valve D has reached the inside edge of the steam port P', as shown on diagram C, and the expanded steam begins to flow from the cylinder into the exhaust port J which communicates with the atmosphere, a condenser or a low-pressure heating system. The relative positions of the crank and eccentric are 3 and 3′ (diagram A). The

FIG. 1. RECIPROCATING STEAM ENGINE FIXED CUT OFF—THROTTLING GOVERNOR.

(Sweet)

piston, having reached the end of its stroke to the right, has its motion reversed; the motion of the valve, however, is not reversed until a somewhat later period. The expanded steam is forced out of the cylinder until the piston has reached a point in the return stroke marked "compression," the valve having returned to the position as shown by diagram *C*. From this point on, until the piston has reached "admission," the exhaust steam remaining in the cylinder is compressed in the clearance space.

The valve action and steam distribution for the crank end of the cylinder are the same as described for the head end.

The valve action is most conveniently studied by means of a pasteboard model of the valve, crank and eccentric. The relative positions of the valve and piston for various parts of the revolution are readily determined by projecting vertical lines through the crank pin and eccentric centers as indicated.

The valve is said to be in "mid-position" when it has reached the middle of its travel as shown on diagram *E*. The distance the valve extends over the outside edge of the port P' or P when in mid-position is termed the *steam lap*. The distance the valve extends beyond the inside edge of the port is termed the *exhaust lap*.

Valve Design. In order to determine the dimensions of a slide valve, for any desired cut off and steam-port opening, the following method may be employed.

The width of the ports P' and P are determined from a consideration of the area required to pass the volume of steam necessary without excessive pressure loss.

Let S = average piston speed ft. per min.
= 2 × r.p.m. × stroke in ft.
A = area of piston, sq. ft.
a = area port, sq. ft.
V = average allowable velocity of steam through the steam port (5500 ft. per min. approximately).
l = length of port, feet (0.82 × diam. cylinder approximately).
w = width of port, feet. (To be not less than ½″ to ⅝″ for good castings.)
$a = l \times w$.

$$a\,V = A\,S$$

$$w = \frac{A \times S}{0.82D \times V}$$

Draw the crank pin circle to any convenient scale, and locate the position of the crank pin for "admission" and "cut off" (points 1 and 2). It is evident from an inspection of the diagram that while the crank pin was moving from 1 to 2 the valve must have opened and closed the steam port on the head end of the cylinder by an amount equal to the port opening desired.

The center of the eccentric travels through the same angle (β) as the crank pin.

Lay off the angle β, diagram *B*, and bisect it with a horizontal line. Then with O as a center, find by trial a radius (r), which will be the eccentricity of the eccentric, such that the horizontal distance between the chord $x - x$ and the circle is equal to the port opening required. Transfer to diagram *A* as shown.

The total angular advance α of the eccentric, valve travel and steam lap are now known.

Locate position 3 of the crank pin and eccentric center 3′ for "release." Draw a vertical line $y - y$ through eccentric center for release. The exhaust lap required is the horizontal distance between $y - y$ and the center line of crank shaft. The line $y - y$ cuts the path of the eccentric center at 4′ which is the position of the eccentric center for "compression" from which the corresponding position 4 of the crank pin for "compression" is found. By the same method of procedure the steam and exhaust laps are determined for the opposite end of the cylinder using the valve travel already determined.

FIG. 2. STEAM ENGINE WITH AUTOMATIC CUT OFF GEAR.

The total length of the valve face is equal to 2 (steam lap + width of port) + distance between the inside edges of ports. Having determined the dimensions of the valve and eccentric as indicated, they may be checked by means of a model.

The following data may be employed for the design of a slide valve.

Maximum cut off	0.625 stroke
Admission	0.98 stroke
Release	0.95 stroke

The valve should fully uncover the port at maximum cut off and preferably for a cut off of one-half stroke.

For a full treatment of the design of slide valves the reader is referred to *Halsey's* "Treatise on Slide Valve Gears."

GOVERNING MECHANISM

A steam engine is designed to carry a certain pre-determined "normal load" which is ordinarily about 70 per cent of the maximum power it will develop with the same initial pressure and speed. This is equivalent to saying that the engine will carry a fifty per cent overload. The office of the governing mechanism of an engine is to regulate or change the power input to meet the varying demand of power output or load. It is furthermore essential, especially in electrical work, that the rotative speed remain practically constant for a range of load from "no load" to "full load."

The voltage generated by a dynamo is proportional to its rotative speed so that a change in speed means a change in voltage. Incandescent lamps and motors are designed to operate, for highest efficiency, at some particular voltage so that any change in the line voltage is undesirable.

The governing mechanism is therefore called upon to preserve a balance between the impelling and resisting efforts which is the essential condition for uniform rotative speed.

Two methods for automatically obtaining the above results are employed for reciprocating steam engines. The first method is known as *throttle governing* and is accomplished by varying the pressure of the steam supply. The second method is known as *cut off governing* and is accomplished by varying the amount of steam admitted to the cylinder by changing the "cut off."

FIG. 3. THROTTLE GOVERNOR.

Throttle Governing. This method of engine governing is not employed, in this country, on reciprocating engines requiring close regulation, its principal use being limited to steam-driven air-compressors, pumps, fans, blowers and steam turbines.

The construction of a typical throttling type of governor is shown by Fig. 3. The balanced valve *B* controls the admission of steam from the pipe to the steam chest. As the valve is lowered it diminishes the free area (throttles) for the passage of steam into the chest, thereby causing a reduction of pressure and actuating force on the engine piston.

The valve *B* is attached to a stem *D*; which is forced upward by means of the spring *F*. The governor weights *G* are revolved by the mitre gears *M* and hollow shaft *H*, the gears receiving motion from the pulley *P* which is belted to the engine shaft. The action of the spring *F* is such as to just balance the centrifugal force developed by the fly balls acting through the levers and spindle *S* at the safe normal speed of the engine.

As the engine speed increases, due to a reduction in the engine load, the increased centrifugal force overcomes the spring resistance and causes the balls to take a position further out from the center of rotation, and in doing so moves the stem and valve downward. This outward movement of the balls is transmitted to the valve stem *D* by means of the bell cranks *L*.

With an increase in load on the engine the speed tends to decrease, in which event the spring action, aided by gravity, moves the weights *G* in and increases the valve opening, admitting steam at a higher pressure into the chest.

Any increase in the engine speed above normal will therefore reduce the pressure and supply to the engine, and a decrease below normal will increase the pressure and supply. A balance between the impelling and resisting efforts is thus maintained, and with a properly designed governor the speed will remain fairly constant within limits.

This type of governor is ordinarily employed on plain slide-valve engines having a fixed cut off at approximately $\frac{5}{8}$ of the stroke.

Cut Off Governing. An automatic cut off engine is rated to deliver a certain normal output with a cut off $\frac{1}{4}$ to $\frac{1}{8}$ of the stroke.

If the power demand is less than normal, cut off automatically occurs earlier in the stroke, and if above normal occurs later in the stroke.

The volume of steam admitted to the cylinder, at constant pressure in this case, determines the amount of power developed in the steam cylinder.

The variation in cut off is accomplished by means of the swinging eccentric (Fig. 2). The position of the eccentric center in reference to the center of the crank shaft is regulated by the shaft governor. The full lines *j* indicate the position of the eccentric, governor weight and arm for $\frac{1}{8}$ cut off. When the load on the engine becomes less than normal, the speed immediately increases; the increase in the centrifugal force acting on the governor weight overcomes the spring tension, causing the weight to swing outward.

This motion is transmitted to the eccentric through the pivoted weight lever and link, causing the eccentric center to move toward the shaft center. The eccentricity of the eccentric is thereby reduced, resulting in a shortening of the valve travel and an earlier cut off. With only the friction load on the engine, the speed is a maximum, the governor weight taking the extreme outside position *k*. The eccentricity of the eccentric and valve travel are now a minimum and the valve is only moved a distance sufficient to uncover the port a very slight amount; simply enough to keep the engine running at the desired speed.

In case the load on the engine becomes greater than normal, the speed decreases with a corresponding decrease in the centrifugal force acting on the governor weight. The spring tension being greater than the centrifugal force at the reduced speed pulls the weight toward the shaft, and at maximum load the speed is a minimum, the governor weight taking the position *i*. The eccentricity and valve travel are now a maximum, giving the longest cut off obtainable with the gear. Fig. 4 shows a commercial form of this type of shaft governor.

The maximum cut off obtainable for this type of valve gear, as usually designed, is approximately $\frac{5}{8}$ of the stroke, the maximum overload capacity being approximately 50 per cent on a basis of $\frac{1}{4}$ cut off for normal load. Engines equipped with shaft governors of the type shown may be made to regulate within two to four revolutions per minute from *no load* to *full load*.

In practice this type of governor is frequently equipped with a double set of weight arms

and springs, having a symmetrical form with reference to the crank shaft. This construction tends to obviate the possibility of oscillation, due to the governor not being in a gravity balanced condition.

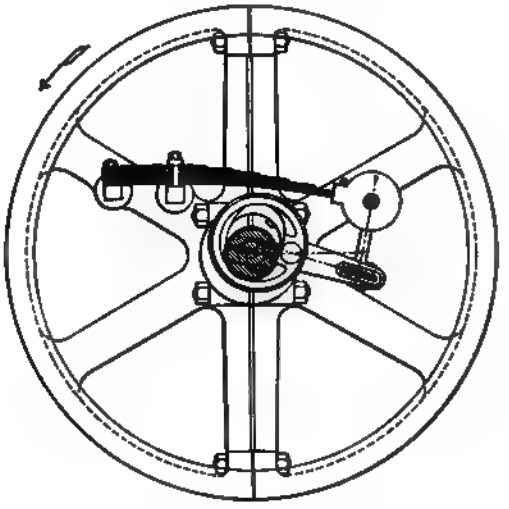

FIG. 4. SHAFT GOVERNOR.[1]

FIG. 5. INERTIA TYPE SHAFT GOVERNOR, POSITION SHOWN FOR MAXIMUM CUT OFF.

The Inertia Governor. The governor previously described depends almost entirely on the action of centrifugal force for its operation and is the original type of shaft governor.

The present type of shaft governor (Fig. 5) employed by the majority of high speed engine-

builders is known as the *Rites* inertia governor. With this type, in addition to the centrifugal force acting on the weights, the inertia of the weights aids in the regulation.

When the engine tends to speed up, the inertia of the weights causes them to lag and aid the spring in reducing the throw of the eccentric and shortening the cut off.

A decrease in the engine speed will, of course, produce the opposite effect.

This type of governor is particularly sensitive to a change of speed, and therefore a close regulator, a regulation of 1½ per cent being common for a gradual change of load from *no load* to *full load*. Fig. 6 shows a high speed engine equipped with the *Rites* inertia governor.

Coefficient of Regulation. The coefficient of speed regulation or sensitiveness of a governing mechanism, as applied to steam engine practice, is defined as the percentage of variation of rotative speed from the full load speed.

Let S = the mean speed of the engine at normal or full load in rev. per min. as specified by the builder or as determined by test.

S_1 = the maximum speed obtained (no load speed).

V = the coefficient of regulation or sensitiveness specified in per cent.

$\frac{VS}{100}$ = allowable change of speed above normal in rev. per min.

Then S_1 must not exceed $S + \frac{VS}{100}$.

Example. The speed of an engine as specified by the builder for full load is 196 r.p.m. and the governor is guaranteed to regulate within 1.5% for a slow change in load from "no load" to "full load," or vice versa.

The speed of the engine was actually 198.8 r.p.m. when operating under "no load" (friction load) conditions and for "full load" the speed was found to be 196 r.p.m.

The speed variation is

$\frac{VS}{100} = 198.8 - 196$ or 2.8 r.p.m. $\quad \therefore V = \frac{100 \times 2.8}{196}$ or 1.4%. The engine, therefore, fulfilled the guarantee in this respect.

Unless otherwise noted, it is assumed that the change from "no load" to "full load" or vice versa is made *gradually* and not suddenly. Frequently two regulation guarantees are made: one for a gradual change of load and a separate one for a sudden change of load from "full load" to "no load," the latter being the greater of the two.

In order to determine the change in speed due to a sudden variation of load when the engine is direct-connected to a generator, the full load is first applied; then the main switch is opened. The speeds are determined by means of an electrical tachometer, which is simply a small generator in circuit with a milli-voltmeter; the milli-voltmeter having been previously calibrated to read the speed direct.

Example. Assume that a speed of $S = 196$ r.p.m. is obtained when the machine is operated at full or normal load, and when the load is suddenly removed the maximum instantaneous speed recorded is $S_1 = 200$ r.p.m. The maximum variation is:

$$\frac{VS}{100} = 200 - 196 = 4 \text{ r.p.m.} \quad \therefore V = 2\%.$$

Specifications should clearly state the method to be employed in determining the speed variation and basis upon which the calculations are to be made. This is particularly important when the unit is supplying both a lighting and rapidly fluctuating motor load, as in this case the instantaneous variation of speed must be limited to a small margin to prevent "blinking" of the lights.

For high-speed direct-connected units the *U. S. Treasury Department* specifies that the maximum variation in speed for a slow change in speed from "no load" to "full load" or vice versa shall not exceed 1½ per cent of the speed at full or normal load, and that for a sudden change in load the maximum variation shall not exceed 2 per cent.

The Balanced Double-Ported Valve. (Figs. 7 and 8.) The shaft governor is held in equilibrium under the opposing forces of spring tension and centrifugal force. Any externally applied

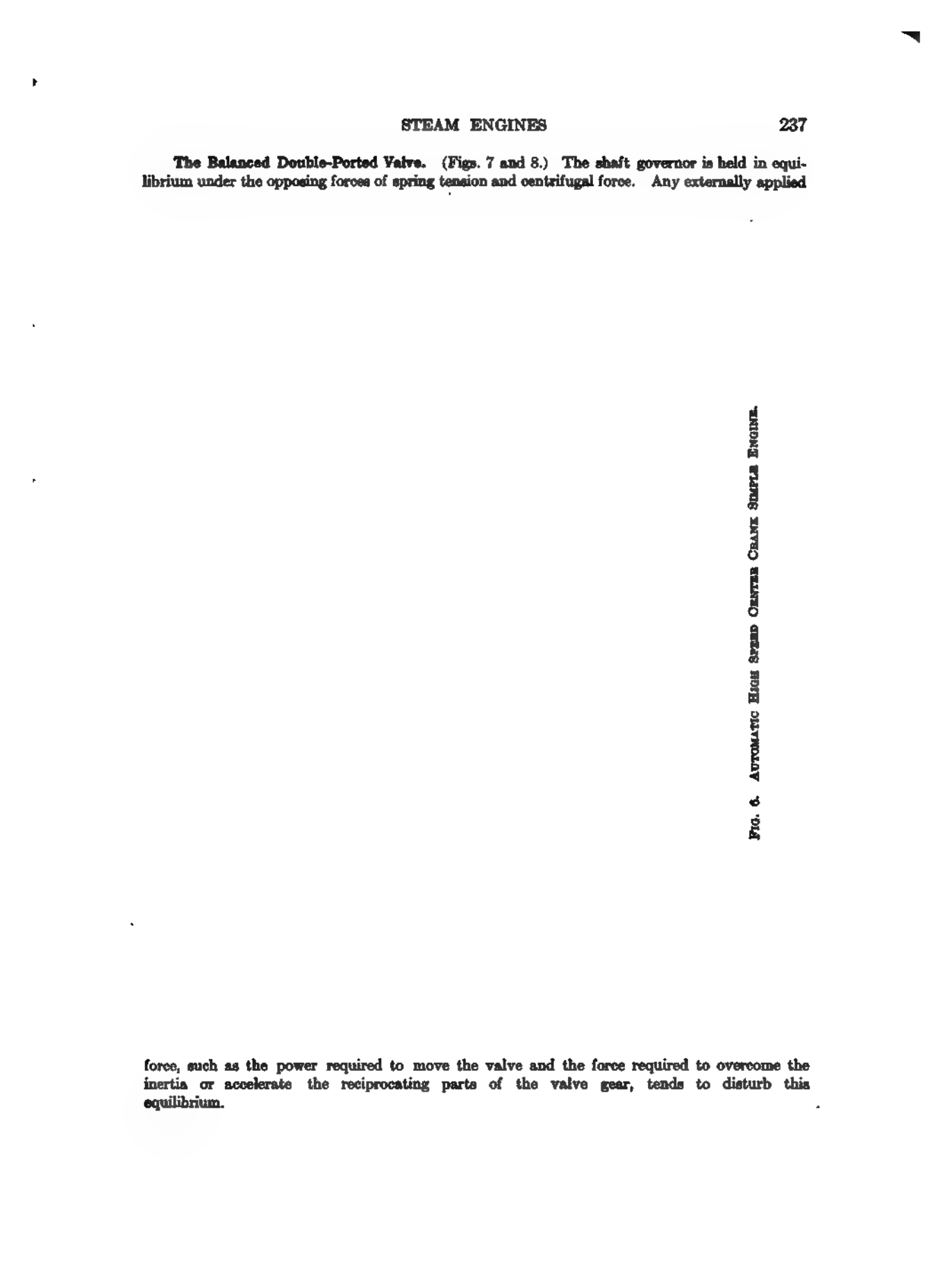

FIG. 6. AUTOMATIC HIGH SPEED CENTER CRANK SIMPLE ENGINE.

force, such as the power required to move the valve and the force required to overcome the inertia or accelerate the reciprocating parts of the valve gear, tends to disturb this equilibrium.

The force required to move an unbalanced slide valve is considerable, being the product of the projected area of the valve, steam pressure in the chest and the coefficient of friction of a lubricated surface.

The accelerating force required to reverse the motion of the valve and gear is a function of the weight and linear velocity of the reciprocating parts of the [illegible].

In order to minimize the effect of friction the valve is provided with a cover plate, thus preventing the steam pressure from acting on the top side. A valve thus equipped is known as a *balanced valve*.

In order to reduce the effect of the inertia forces, the length of travel is reduced by making the valve *double-ported*. With this arrangement the same area of port opening is obtained by one-half the movement, other conditions being equal; the steam lap is only one-half as large as for the plain slide valve.

FIG. 7. DOUBLE-PORTED BALANCED VALVE.

The Corliss Engine. The essential feature of the Corliss type of steam engine is the employment of four cylindrical valves; the upper two, with a horizontal engine, being used for steam admission and the lower pair for exhaust. The principal parts of the Corliss cylinder and valve gear are shown by Figs. 9 to 15.

The object of the Corliss engine, which is obviously more expensive to build than the slide-valve type, is a reduction in the heat loss incident to wire drawing of the steam during admission, initial condensation and the detrimental effect of a large clearance volume. With the slide-valve engine the live steam must travel through the same port as the exhaust steam, the result being a cooling of the steam admitted and a greater initial condensation than occurs when separate steam and exhaust ports are provided. The steam ports of a slide-valve engine are gradually opened and closed, resulting in a loss in pressure incurred in forcing the steam through a restricted port opening.

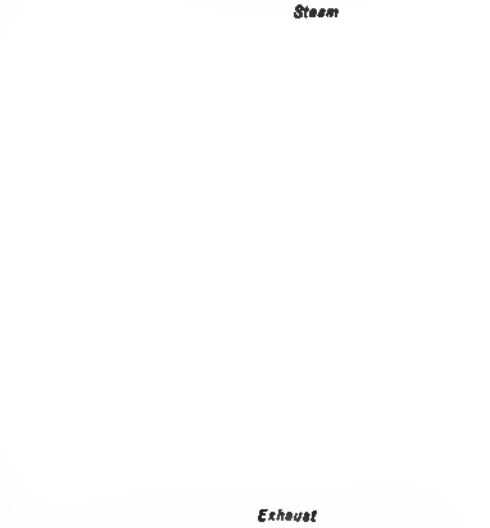

FIG. 8. SECTION THROUGH HIGH-SPEED ENGINE CYLINDER.

With the Corliss engine this loss is reduced to a minimum, due to the fact that the steam valves are opened rapidly by the valve gear and closed promptly by the action of dash pots operating independently of the gear.

Experience has demonstrated that an engine having a large clearance volume (space between the piston and valve covering the port when the piston is at the end of its stroke) is not so economical in the use of steam as one with a smaller clearance. With Corliss valves the

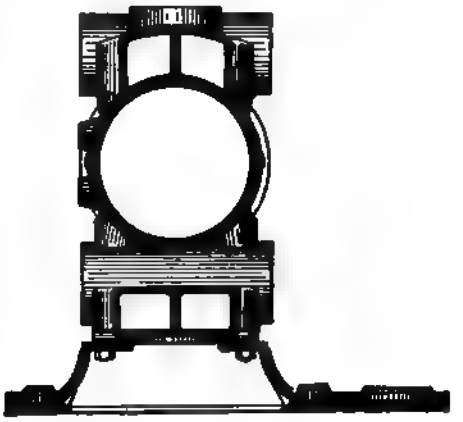

FIG. 9. VERTICAL SECTION THROUGH A CORLISS CYLINDER SHOWING DOUBLE-PORTED VALVES.

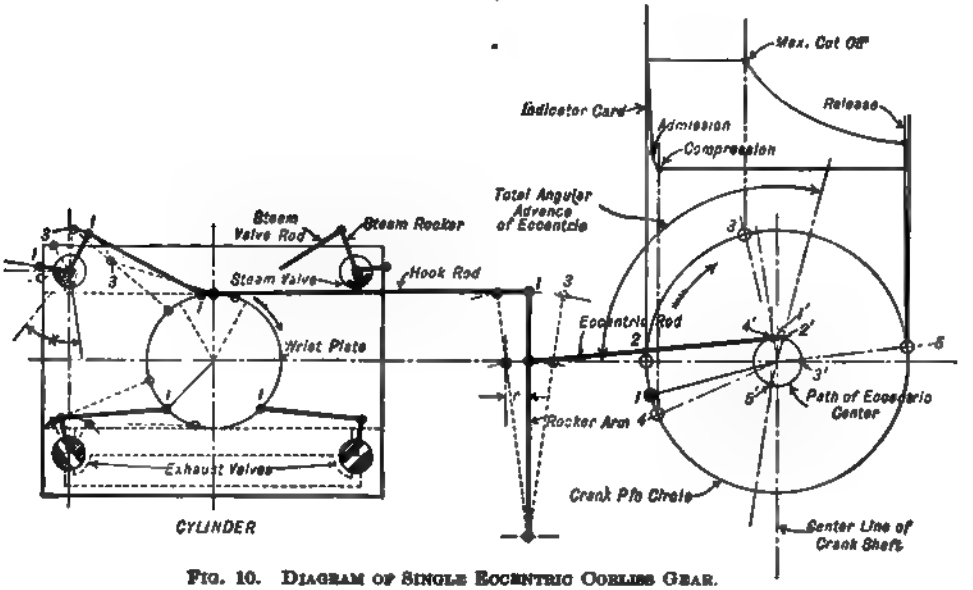

FIG. 10. DIAGRAM OF SINGLE ECCENTRIC CORLISS GEAR.

clearance volume is several times smaller than is possible with a single slide valve. The net result is an engine with an increased steam economy.

The valves are operated as indicated by the diagram of connections (Fig. 10). The motion of the eccentric is transmitted by the eccentric rod and hook rod to the wrist plate. The os-

cillatory motion of the wrist plate is transmitted to the valves through the steam and exhaust rods, rockers and valve stems.

The exhaust valves are at all times connected with the wrist plate, whereas the steam valves only receive motion from the wrist plate during the period when they are opening the steam ports for admission of steam to the cylinder.

The diagram shows a single eccentric gear; that is, both steam and exhaust valves driven by the same eccentric. The gear is shown in its central position, the crank pin indicated by 1 and eccentric center by 1'. The crank pin is in " lead " position, the steam valve for the head end of cylinder being just ready to open or already slightly open.

The maximum cut off must occur when the center of the eccentric has reached the end of its travel or at 3' (corresponding position of the crank pin at 3) if the valve is to be closed by the action of the dash pot, as the steam rocker (Fig. 13) is at the highest point of its travel at this time.

The exhaust valve must close (compression) at 4 somewhat before admission (1) occurs and will open (release) when the center of the eccentric is at 5', found by drawing a perpendicular through 4'. The total angular advance then determines the position 5 of the crank pin for release. To lay out the Corliss gear a "cut and try" method is adopted.

In order for release to take place somewhat before the piston has reached the end of its travel and at the same time obtain some compression, it is found with the single eccentric gear that the maximum cut off obtainable is approximately 3/8 of the stroke.

With two eccentrics, one for the steam and one for the exhaust valves, a cut off of approximately 7/10 of the stroke is obtainable.

The valve stem V, for the steam valve for the head end of the cylinder, is keyed to the steam arm D (Fig. 11), on the end of which is bolted a hardened steel plate. The "steam arm" is lifted by the " steam hook " or latch L, which is also provided with a hardened steel plate, which engages with the steam arm as shown.

Lifting the steam arm opens the steam port as indicated by Fig. 10. The steam hook is attached to one arm of the " steam rocker " A, the other arm of which is connected with the wrist plate by means of the steam rod. The steam rocker has a bearing on the steam valve bonnet through which the valve stem V passes. Fig. 13 shows an assembly of the releasing gear.

When the piston has reached the end of the stroke, on which the inlet gear shown is located, the wrist plate is pulling the rocker which in turn, through the steam hook, is raising the steam arm and opening the steam port. When the piston has reached the point in its travel where cut off is to take place the arm B of the steam hook (Fig. 12) engages the " knock-off " cam C and the hook L is disengaged from the steam arm D. The steam arm D is attached to the drop rod, the other end of which is connected to a vacuum cylinder termed a " dash pot." (Fig.14.) When the steam arm is raised a partial vacuum is created in the dash pot so that when released by the steam hook, the steam valve is rapidly closed. The piston in the dash pot is so arranged that a small quantity of air is trapped on the down stroke which acts as a cushion and prevents the piston or plunger from striking the bottom of the air cylinder.

The knock-off cam C is attached to the cam lever F which has a bearing on the steam bonnet. The cam lever F is operated by the governor as indicated by Fig. 15. When the engine speed tends to increase above normal, due to a decrease in the load, the governor weights move outward. This motion is communicated to the sliding collar, by means of the lifting links, to which is attached the governor drop rod connected with the bell crank. Raising the collar moves the knock-off cam C (Fig. 11) in a downward direction so that the hook arm L will engage the cam C earlier in the stroke, thus producing an earlier cut-off. An increase in load results in a decrease in speed and the action described is reversed, causing the cut off to occur later in the stroke.

In case the belt driving the governor should break, the " safety cam " S is thrown into action and prevents the latch from engaging the steam arm.

In order to prevent the operation of the safety cam, when shutting down the engine, a pro-

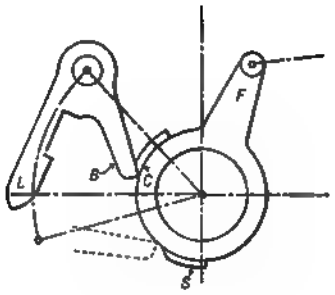

FIG. 11. TYPICAL RELEASING GEAR.

FIG. 12. EXTREME POSITION OF HOOK.

FIG. 13. ASSEMBLY OF COILING RELEASING GEAR.

FIG. 14. DASH POT.

jection on the collar comes to rest on a vertical arm (governor safety stop) either manually operated or automatically operated by the steam pressure below the engine throttle valve.

With a single eccentric releasing type of gear the maximum cut off obtainable is approximately ⅗ of the stroke, which limits the overload capacity of the engine to about 25 per cent on a basis of ¼ cut off for the normal load.

In order to increase the range of cut off to approximately seventy per cent of the stroke

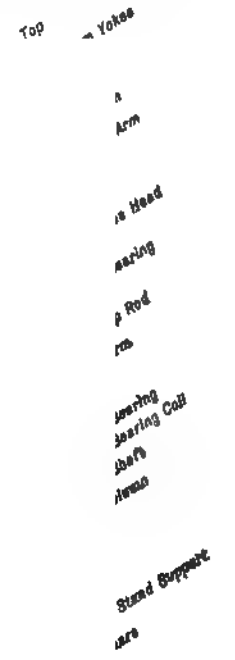

FIG. 15. GOVERNING MECHANISM OF THE CORLISS ENGINE.

a separate eccentric is employed to operate the exhaust valves. The majority of Corliss engines are so equipped in order to carry a fifty per cent overload.

The speed of an engine equipped with the Corliss type of gear is limited in practice to approximately 125 r.p.m. as at higher speeds the hook, as ordinarily constructed, does not always latch or engage the steam arm. With gears especially designed, speeds of 160 r.p.m. have been obtained.

STEAM ENGINE PROPORTIONS

In the design of steam engines, the pressure on the wearing surfaces must be taken into consideration when proportioning the various details. The pressure on the several parts is due not only to weight but to the motion of the reciprocating parts acting under the steam pressure. For example, steam pressure on the piston is transmitted to the crank pin through the piston rod and connecting rod, which may be resolved into two components.

One of the components, which acts radially along the crank, exerts a pressure on the main bearings which is in addition to the pressure caused by the weight of the shaft, crank, flywheel, etc. The other component acts at right angles to the crank exerting a tangential pressure, causing the crank to revolve and is known as the crank effort. Cross-head pins are also subjected to pressure from piston and connecting rod.

From experience based on practical design and construction, permissible pressures per square inch on the areas obtained by multiplying the length by the diameter of journal have been deduced, which are as follows: Main bearings, 140 to 160 lb.; crank pins, 1000 to 1200 lb.; cross-head pins, 1200 to 1600 lb.

Based on these values and with steam pressures of 100 to 125 lb., the following data by *James B. Stanwood* have been compiled as conforming to common stationary engine practice and will be found useful in checking the dimensions submitted in an engine proposal. It is not within the province of the text to treat on the mechanics of the steam engine. The problems arising in the design of governors and the determination of the weight of flywheel, when the engine is required for parallel operation of alternating-current machines, are very complicated.

Relation of Engine Parts to Piston

	Relation to Piston Diam.	Piston Area
Main Shaft, diameter	0.42—0.50	
Main Shaft, length	0.85—1.00	
Crank Pin, diameter	0.22—0.27	
Crank Pin, length	0.25—0.30	
Crosshead Pin, diameter	0.18—0.20	
Crosshead Pin, length	0.25—0.30	
Piston Rod, diameter	0.14—0.17	
Steam Port Area:		
Slide Valve Engine		0.08—0.09
High Speed Auto. Engine		0.10—0.12
Corliss Engine		0.07—0.08
Exhaust Port Area:		
Slide Valve Engine		0.15—0.20
High Speed Auto. Engine		0.18—0.22
Corliss Engine		0.10—0.12
Steam Pipe Diameter:		
Slide Valve Engine	0.25—0.25 + ½"	
High Speed Auto. Engine	0.33	
Corliss Engine	0.30	
Exhaust Pipe Diameter:		
Slide Valve Engine	0.33	
High Speed Auto. Engine	0.375	
Corliss Engine	0.33—0.375	

	Per Cent. Piston Displacement
Clearance Space:	
Slide Valve Engine	6—8
High Speed Auto. Eng., 1 valve	8—15
High Speed Auto. Eng., 2 valves	3—5
Corliss Engine	2—4

	Lb. per rated Horsepower
Weights of Engines:	
Slide Valve	125—135
H. S. Auto	90—120
Corliss	220—250
Weights of Flywheels:	
Slide Valve Engines	33
High Speed Auto. Engine	25—33
Corliss	80—120

Rules for Flywheel Weights, Single-Cylinder Steam Engines

Let d = diameter of cylinder in inches;
S = stroke of cylinder in inches;
D = diameter of flywheel in feet;
R = revolutions per minute;
W = weight of flywheel in pounds.

For slide valve engines, ordinary duty,

$$W = 350{,}000 \frac{d^2 S}{D^2 R^2}$$

For slide valve engines, electric lighting,

$$W = 700{,}000 \frac{d^2 S}{D^2 R^2}$$

For automatic high-speed engines,

$$W = 1{,}000{,}000 \frac{d^2 S}{D^2 R^2}$$

For Corliss engines, ordinary duty,

$$W = 700{,}000 \frac{d^2 S}{D^2 R^2}$$

For Corliss engines, electric lighting,

$$W = 1{,}000{,}000 \frac{d^2 S}{D^2 R^2}$$

THE WORK DIAGRAM

The action of the steam in the cylinder of a reciprocating engine is conveniently studied by means of a work diagram (Fig. 16).

Assume that steam at an initial absolute pressure of P_1 lb. per sq. in. is admitted to the cylinder on the left-hand side of the piston for the entire length of the piston stroke L_1. This is the condition of operation of a direct-acting steam pump. The absolute pressure P_2, existing on the opposite side of the piston, termed back pressure for an engine exhausting to the atmosphere, is approximately 1.5 lb. per sq. in. above the barometric pressure. This small increase is necessary to overcome the friction of the steam in its passage through the port passages and exhaust piping.

The effective driving pressure is therefore $P_1 - P_2$ lb. per sq. in.

Let A = area of piston in sq. in.
L_1 = length of piston stroke in ft.
W = work per stroke ft.-lb.
$= (P_1 - P_2) L_1 A$

V_1 = piston displacement volume cu. ft.
$= L_1 A$
$\therefore\ W = (P_1 - P_2)\, V_1$

The work W is represented by the area $CDHG$ of the diagram shown to the scale used for pressure and volume.

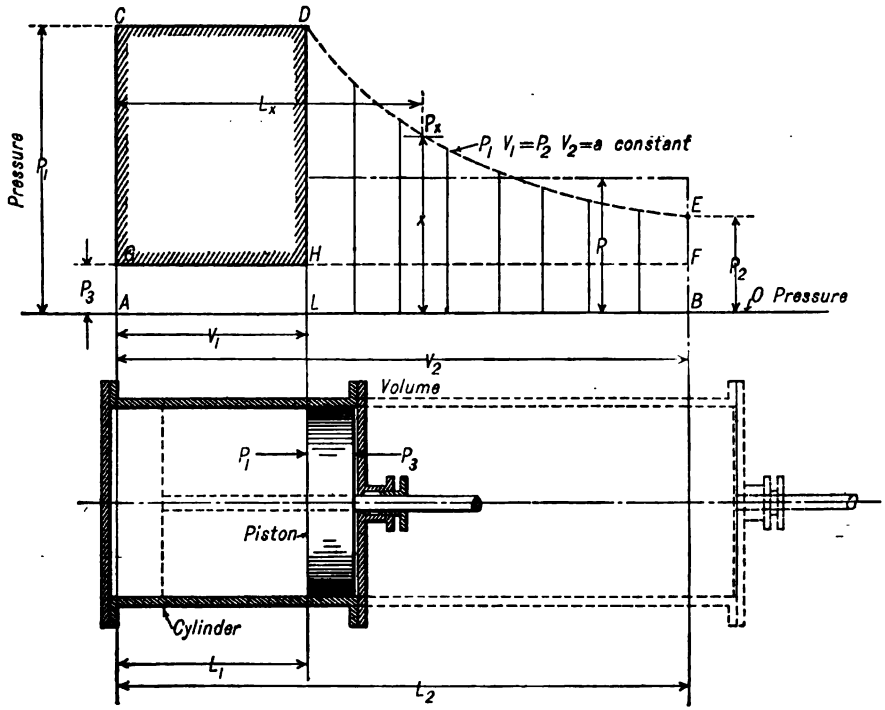

FIG. 16. THE WORK DIAGRAM.

Let the length of the cylinder be increased, as shown by the dash lines, so that the length of piston stroke is now L_2 ft. and the piston displacement volume $V_2 = L_2 A$ cu. ft.

If the same volume (V_1) at pressure P_1 be admitted to the lengthened cylinder and the supply cut off when this volume has been admitted the steam will expand with a decreasing pressure as the piston moves to the right and the volume increases. The relation existing at any point of the stroke between the pressure and volume, during the expansion period, is approximately given by *Boyle's* law, viz., pressure times volume is a constant. (PV = a constant.)

Let P_2 = the terminal pressure at the end of the stroke.

Then $P_1 V_1 = P_2 V_2$ or $P_2 = \dfrac{P_1 V_1}{V_2}$ and $\dfrac{P_1}{P_2} = \dfrac{V_2}{V_1}$

The ratio $\dfrac{V_2}{V_1}$ or the number of times the steam is expanded is termed "*the ratio of expansion*" (r).

As the area of the piston is a constant, we have the relation $\dfrac{V_1}{V_2} = \dfrac{L_1}{L_2}$. The recip-

rocal of the number of expansions $\left(\frac{1}{r}\right)$ is the fraction of the stroke completed when the supply of steam was cut off from the cylinder. The ratio $\frac{1}{r}$ or $\frac{L_1}{L_2}$ is termed the "*cut off*."

Thus with an initial absolute pressure, $P_1 = 100$ lb. per sq. in., $V_1 = 1$ cu. ft. and $V_2 = 4$ cu. ft., the terminal pressure $P_2 = 100 \times \frac{1}{4} = 25$ lb. The ratio of expansion is $r = \frac{V_2}{V_1} = 4$

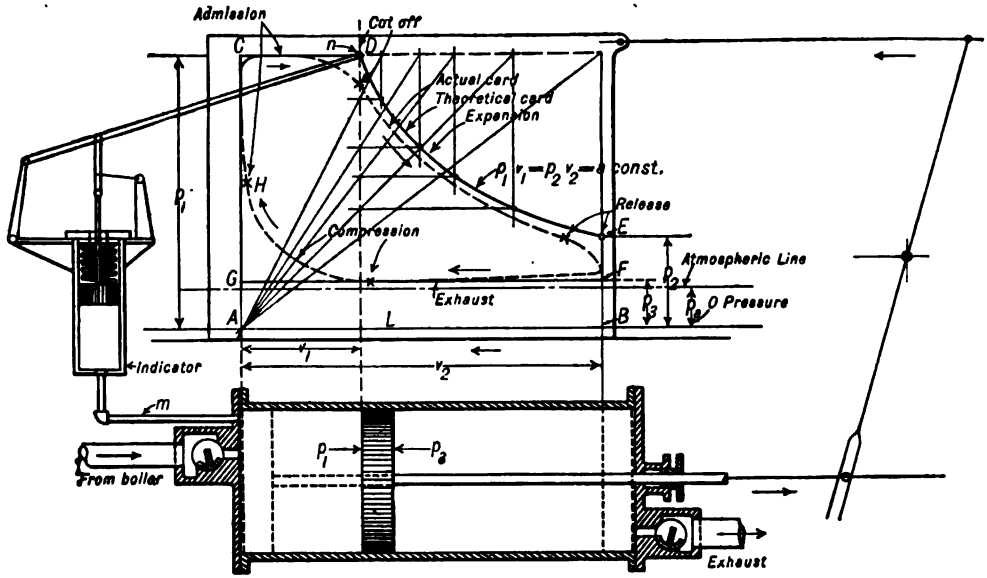

FIG. 17. METHOD OF CONSTRUCTING EXPANSION CURVE

and the cut off is said to have taken place at $\frac{1}{4}$ or 25 per cent of the stroke.

It is evident that the terminal pressure P_2 can never be less than P_3 if work is to be done on the piston by the steam throughout the stroke, which is the effect naturally sought.

The limit of the terminal pressure is therefore fixed by P_2 or when $P_2 = P_3$.

The maximum number of expansions is therefore $r = \frac{V_2}{V_1} = \frac{P_1}{P_3}$.

In practice, the engine cylinder is designed for a somewhat less number of expansions as will be later explained.

The expansion curve DE may be plotted by points as may be determined by calculating the pressure as P_x for a length of stroke L_x corresponding to volume V_x, thus $P_x = \frac{P_1 V_1}{V_x}$. The expansion curve is a hyperbola and may be constructed graphically as shown by Fig. 17.

The average forward pressure during the expansion part of the stroke, from D to E or H to F, may be approximately determined by dividing the length HF (Fig. 16) into a number (n) of equal parts and scaling the height (x) of the mean pressure ordinate for each division. The sum of these ordinates ($x_1 + x_2 + x_3 \ldots x_n$) divided by n and multiplied by the vertical scale of pressures gives the *mean absolute forward pressure* P during the expansion period. A more exact result is obtained by integrating the area $DEBL$ by means of a planimeter and dividing this

area by the length LB and multiplying the quotient (height of mean ordinate) by the vertical pressure scale. The mean effective pressure acting on the piston *during the expansion portion of the stroke* is therefore $P - P_2$ lb. per sq. in. The work W' performed is $(P - P_2)\ (V_2 - V_1)$ ft.-lb. The total work for the entire stroke is therefore.

$$W = W_1 + W' = (P_1 - P_2)\ V_1 + (P - P_2)\ (V_2 - V_1) \text{ ft.-lb.}$$

Economy of Using Steam Expansively. The per cent gain in work obtained per unit volume or weight of steam used, from the foregoing, is therefore $\frac{W - W_1}{W_1} \times 100$.

The reason for using steam expansively in an engine cylinder is thus apparent.

Theoretical Mean Effective Pressure. The conventional method for determining the theoretical mean effective pressure (m.e.p.) for *the entire piston stroke* when the initial pressure (P_1), back pressure (P_2) and ratio of expansion $\left(r = \frac{V_2}{V_1}\right)$ or cut off $\left(\frac{1}{r}\right)$ are given or assumed is as follows:

FIG. 18. SECTION OF STEAM ENGINE INDICATOR.

$$\text{m.e.p.} = P_e = \frac{\text{Area } CDEBA - \text{Area } GFBA}{\text{length } AB}$$

Area $GFBA = P_2V_2$. $AB = V_2$.

Area $CDEBA$ = Area $CDLA$ + Area $DEBL$.

Area $CDLA = P_1V_1$. The area $DEBL$ under the expansion line by method of calculus = $DL \times AL \times$ hyperbolic log. $\frac{AB}{AL}$. $DL = P_1$. $AL = V_1$. $\frac{AB}{AL} = \frac{V_2}{V_1} = r$, the ratio expansion.

$$\therefore \text{Area } DEBL = P_1V_1 \log_e r.$$

$$P_e = \frac{P_1V_1 + P_1V_1 \log_e r - P_2V_2}{V_2}$$

$$= \frac{P_1V_1}{V_2}(1 + \log_e r) - P_2, \left(\frac{V_1}{V_2} = \frac{1}{r}\right)$$

$$= P_1\left(\frac{1 + \log_e r}{r}\right) - P_2$$

The value of the expression $\frac{1 + \log_e r}{r}$ may be taken from Table 1 for various assumed ratios of expansion (r). This is the ratio of the mean forward pressure to the absolute initial pressure.

Example. Required the theoretical m.e.p. for the following conditions. Initial pressure 100 lb. per sq. in. gage. $P_1 = 100 + 14.7 = 114.7$. Back pressure 2 lb. gage $P_2 = 16.7$. Ratio of expansion $r = 4$ (cut off ¼ stroke).

From Table 1, $\frac{1 + \log_e r}{r} = 0.5965$.

Theoretical m.e.p. = $(114.7 \times 0.5965) - 16.7 = 51.7$ lb. per sq. in.

TABLE 1

Ratio of Expansion r	Cut-off $1/r$	Ratio of Mean Forward to Initial Pressure	Ratio of Expansion r	Cut-off $1/r$	Ratio of Mean Forward to Initial Pressure
30	0.033	0.1467	6.00	0.166	0.4653
28	.036	.1547	5.71	.175	.4807
26	.038	.1638	5.00	.200	.5218
24	.042	.1741	4.44	.225	.5608
22	.045	.1860	4.00	.250	.5965
20	.050	.1998	3.63	.275	.6308
18	.055	.2161	3.33	.300	.6615
16	.062	.2358	3.00	.333	.6995
15	.066	.2472	2.86	.350	.7171
14	.071	.2599	2.66	.375	.7440
13.33	.075	.2690	2.50	.400	.7664
13	.077	.2742	2.22	.450	.8095
12	.083	.2904	2.00	.500	.8465
11	.091	.3089	1.82	.550	.8786
10	.100	.3303	1.66	.600	.9066
9	.111	.3552	1.60	.625	.9187
8	.125	.3849	1.54	.650	.9292
7	.143	.4210	1.48	.675	.9405
6.66	.150	.4347	....	.....	.....

Actual Mean Effective Pressure. The actual mean effective pressure of a reciprocating engine is determined by making use of an instrument termed an indicator. An instrument of this kind is shown diagrammatically by Fig. 17 and the actual instrument, in section, by Fig. 18.

The indicator consists of a small cylinder in which a piston operates. The piston is at-

tached to one end of a helical spring, the other end of the spring being attached to the indicator cylinder. The indicator cylinder is placed in communication with the engine cylinder by means of the pipe *m*. The pressure of the steam on the piston forces it upward against the resistance of the spring. The distance the piston rises is directly proportional to the steam pressure.

The motion of the piston is transmitted to a pencil *n* through the medium of a combination of levers (parallel motion) such that the vertical motion of the pencil is exactly parallel to the center line of the indicator cylinder.

TABLE 2

COMPARISON OF MEAN EFFECTIVE PRESSURES OBTAINED IN PRACTICE WITH TABULAR AMOUNTS

(Non-Condensing Engines)

Type of Engine	Size, Inches	Steam Pipe Pressure Lb. Gage	Actual Cut off	Actual M.E.P. from Diagrams, Lb.per Sq.In.	M.E.P. as per Usual M'f'r's Tables
Single valve	8 x 12	88 82.4 81.9	0.208 .312 .378	24.5 34.8 43.1	36 48 55
Single valve	13 x 12	100	.32 .42 .53	45.5 56.5 67.6	64 76 84
Corliss	23 x 60	72.8	.367	33.1	46
Corliss	28¼ x 59½	101	.315	41.2	61
Corliss	16 x 42	100	.178 .231 .323	29.5 38.1 48.4	40 49 64
Corliss	22 x 30	148.5	.201	54.6	..
Gridiron valve	28 x 60	65.1	.222	23.8	30
Four-valve	19 x 18	100	.285 .185	42.3 29.3	58 42

The pressure, in pounds per square inch, required to move the pencil vertically one inch is termed the scale of the spring. Thus, if a 60-lb. spring is used and a pressure of 120 lb. per sq. in. existed within the cylinder, the pencil would move through a vertical distance of 2 in.

The pencil presses against a piece of paper wrapped around a drum. The drum is oscillated about its axis by means of a chord, one end of which is wrapped around the lower part of the drum and the other end attached to a reducing motion, which receives its motion from the engine cross-head. The drum movement is therefore a reproduction of the engine piston movement to a reduced scale.

The diagram traced by the pencil is a pressure volume (PV) diagram, as the pressure existing at any and all points of the engine piston stroke is automatically recorded on the paper. This diagram is termed an *indicator diagram*.

Owing to the imperfections in the working of the actual engine the diagram obtained is similar to the diagram shown by the dash lines (Fig. 17), and somewhat less in area and consequently has a smaller m.e.p. than the theoretical diagram.

There is a loss of pressure during admission of steam to the cylinder due to frictional resistance of the steam passing through the steam port and also from the condensation of a small portion of the steam when it is brought in contact with the cooler cylinder walls.

The exhaust is opened (release occurs) somewhat before the piston reaches the end of the stroke and closes (compression begins) before the piston has reached the end of the return or

exhaust stroke. After the exhaust is closed the steam trapped in the cylinder is compressed in the clearance space of the cylinder, the pressure rising approximately in accordance with Boyle's law.

Admission occurs at H near the end of the return stroke.

Diagram Factor. In order to calculate the size of cylinder required to perform a certain amount of work an estimate of the *expected* m.e.p. is necessary. The ratio $\frac{\text{actual m.e.p.}}{\text{theoretical m.e.p.}}$ is termed the *diagram factor*.

The theoretical m.e.p. referred to, is calculated as previously given for the square-cornered card, assuming the cylinder as having no clearance space, full initial pressure up to the point of cut off release at end of stroke and no compression, and initial pressure being that *above* the engine throttle. The data given by the following table may be used in this connection.

TABLE 3

APPROXIMATE DIAGRAM FACTORS*

Ratio of Actual M.E.P. to Theoretical M.E.P.

Type of Engine	Simple	Compound
Single-valve high speed	0.80	0.70
Four-valve high speed	.85	.75
Corliss slow and medium speed	.90	.80

* Based on initial pressure above the throttle valve.

Example. Required the expected m.e.p. for a simple high speed engine for the following conditions of operation: Initial pressure 100 lb. per sq. in. gage ($p_1 = 100 + 14.7 = 114.7$), back pressure 2 lb. per sq. in. gage ($p_2 = 2 + 14.7 = 16.7$). Cut off $\left(\frac{1}{r}\right)$ 0.25 stroke. $r = 4$.

$\frac{1 + \log_e r}{r} = 0.5965$ from Table 1.

Theoretical m.e.p. $= (114.7 \times 0.5965) - 16.7 = 51.7$ lb. per sq. in.

Expected m.e.p. = Theor. m.e.p. × diagram factor $= 51.7 \times 0.80 = 41.36$ lb. per sq. in.

Fig. 19 shows a reproduction of a pair of indicator cards taken from a medium speed four-valve engine and the method used in calculating the diagram factor. The "boiler pressure" refers to the pressure above the engine throttle.

Example. (*See Cut, Opposite Page.*)

Diameter of piston, 15 inches. Net area of piston, head end, 176.71 sq. in.

Diameter of piston rod, $2\frac{1}{16}$ inches. Area of piston rod, 4.66 sq. in.

Net area of piston, crank end, 172.05 sq. in.

	Head End	Crank End
Average ordinate length	1.0772	1.0772
Multiply by scale of card	50	50
Mean effective pressure	53.86	53.86

Crank end $\dfrac{P_e \quad L \quad A \quad N}{33{,}000} = \dfrac{53.86 \times 1.667 \times 172.05 \times 150}{33{,}000} = 70.22$

Head end $\dfrac{P_e \quad L \quad A \quad N}{33{,}000} = \dfrac{53.86 \times 1.667 \times 176.71 \times 150}{33{,}000} = 72.11$

Combined indicated horsepower 142.33

Theoretical m.e.p $= (107 + 14.7)\left(\frac{1 + \log_e 4}{4}\right) - 14.7 = 57.87$ lb.

Diagram factor $= \frac{53.86}{57.87} = 0.93.$

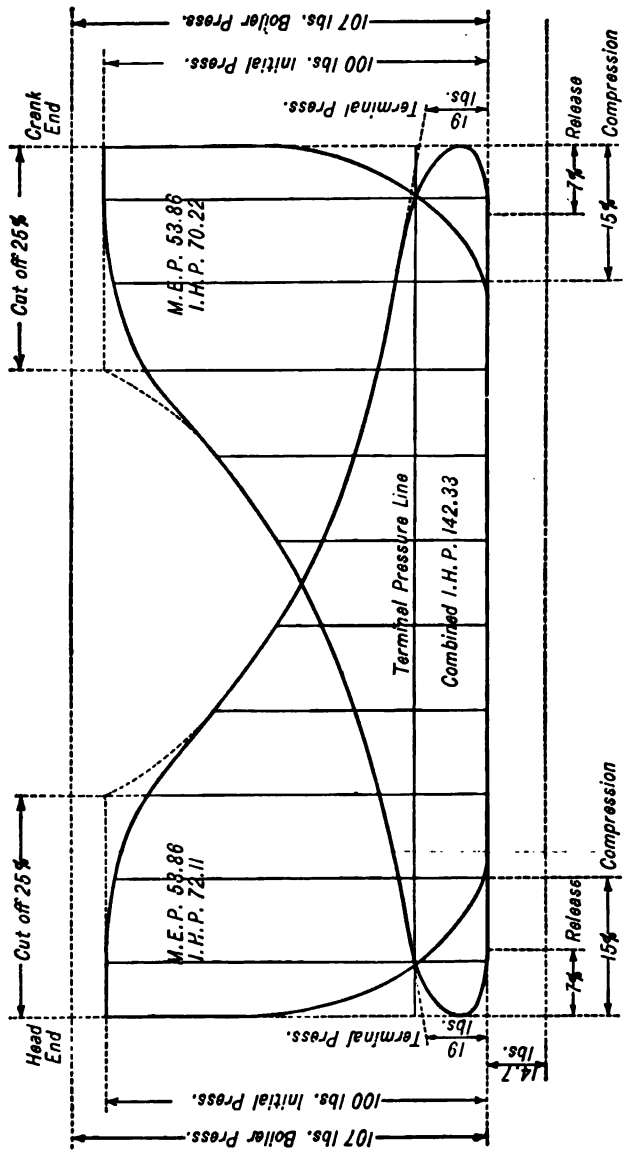

FIG. 19. INDICATOR CARD TAKEN FROM 15 x 20 ATLAS 4-VALVE AUTOMATIC ENGINE; SPEED, 150 R.P.M.; BOILER PRESSURE, 107 LB.; SCALE, 50 LB.

POWER DEVELOPED BY RECIPROCATING ENGINES

The power developed by an engine is expressed in terms of either *brake horsepower* (d.hp.) or *indicated horsepower* (i.hp.) usually the latter.

Brake Horsepower. The brake horsepower is the power delivered by the engine crank shaft as determined by means of a brake mounted on the flywheel (Fig. 20).

Let D = diameter of flywheel measured in feet.
n = revolutions of engine per minute.
P = resistance at circumference of wheel, lb.
R = load on scales, lb.
a = length of brake arm, ft.

$$P \times \frac{D}{2} = R \times a. \quad PD = 2Ra$$

1 horsepower = 33000 ft.-lb. per min.

$$\text{Brake horsepower (d.hp.)} = \frac{\pi D P n}{33000} = \frac{2\pi a R n}{33000}$$

For a discussion of various forms of brakes and absorption dynamometers see *Carpenter and Diederichs'* "Experimental Engineering."

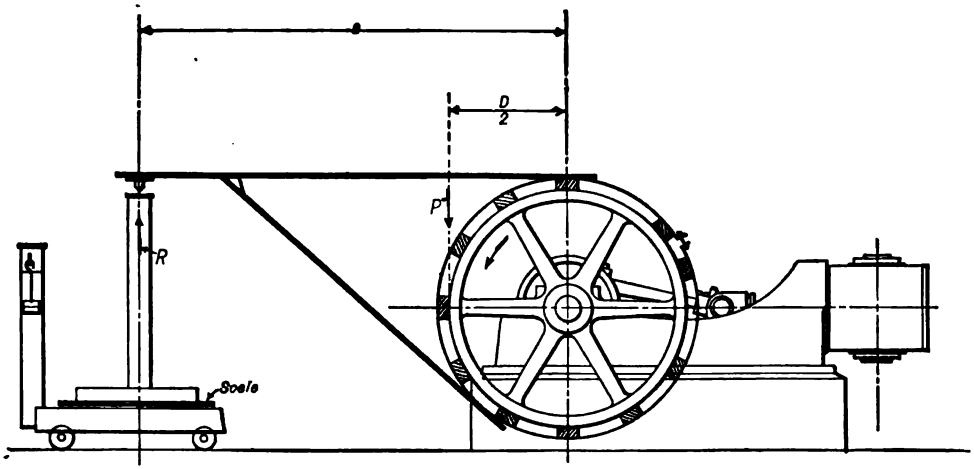

FIG. 20. PRONY BRAKE.

Example. What is the brake horsepower developed by an engine having a 5′ − 0″ diameter (D) of wheel running 200 r.p.m. (n), length of brake arm (a) 6′ − 0″, weight on scales (R) 200 lb.

$$\text{d.hp.} = \frac{2 \times 3.14 \times 6 \times 200 \times 200}{33000} = 45.7.$$

Indicated Horsepower. The indicated horsepower refers to the power developed in the steam cylinder as determined from the indicator card and is greater than the brake horsepower by an amount equal to the frictional losses in the engine.

Let P_e = mean effective pressure lb. per sq. in.
A = area of piston, sq. in.*

* No deduction is made for the area of the piston rod on the crank end in preliminary calculations for the size of cylinder.

L = length of stroke, in feet.
N = number of working strokes per min.
= 2 × r.p.m. for double-acting cylinder.
S = average piston speed ft. per min.
= $N\,L$.

$$\text{i.hp.} = \frac{P_e\,L\,A\,N}{33000} = \frac{P_e\,A\,S}{33000}$$

Example. Required the indicated horsepower of a 12″ × 12″ engine operating under the following conditions: Mean effective pressure P_e = 40, r.p.m. = 300, N = 600, A = 113.1 sq. in., L = 1 ft.:

$$\text{i.hp} = \frac{40 \times 1 \times 113.1 \times 600}{33000} = 82.2$$

Machine Efficiency. The efficiency of a machine, in general, is a measure of its economic performance under certain imposed conditions of operation.

There has been established, by custom and usage, several so-called efficiency standards by means of which we may conveniently compare the performance of various types of boilers, heat, hydraulic and electric motors, etc. The power output is *always less* than the energy or power input due to the transformation of a portion of the original mechanical energy supplied into heat energy caused by the friction of the moving parts. As this transformation serves no useful purpose it is an economic loss in the sense that a portion of the energy supplied does not reappear in the final desired form.

When the friction loss of a machine is mentioned it is customary to state it as a percentage of the power supplied or power input. It, however, is more common to express or convey the idea as to magnitude of the friction loss not in terms of power input but by means of a ratio termed *mechanical or machine efficiency.*

The *mechanical or machine efficiency* of an engine, fan, pump, etc., is defined as the ratio of the useful work performed or power output to the mechanical energy supplied or power input, both input and output being measured in foot pounds or the more commonly used unit, the horsepower. Thus the *machine efficiency* of a steam engine is the ratio

$$\frac{\text{brake horsepower (output)}}{\text{indicated horsepower (input)}} \text{ or } \frac{\text{d.hp.}}{\text{i.hp.}}$$

The *machine efficiency* of a centrifugal pump is the ratio

$$\frac{\text{water horsepower (output)}}{\text{brake horsepower (input)}} \text{ or } \frac{\text{w.hp.}}{\text{d.hp.}}$$

The *machine efficiency* of a reciprocating steam pump is the ratio

$$\frac{\text{water horsepower (output)}}{\text{indicated horsepower (input)}} \text{ or } \frac{\text{w.hp.}}{\text{i.hp.}}$$

The *machine efficiency* of a fan is the ratio of

$$\frac{\text{air horsepower (output)}}{\text{brake horsepower (input)}} \text{ or } \frac{\text{a.hp.}}{\text{d.hp.}}$$

The *machine efficiency* of an electric generator is the ratio

$$\frac{\text{electrical horsepower output}}{\text{brake horsepower input}} \text{ or } \frac{\text{e.hp.}}{\text{d.hp.}}$$

The *machine efficiency* of an eleetric motor is the ratio

$$\frac{\text{brake horsepower output}}{\text{electrical horsepower input}} \text{ or } \frac{\text{d.hp.}}{\text{e.hp.}}$$

The electrical horsepower rating for generators is based on the electrical output at generator terminals.

The horsepower rating of motors refers to the brake horsepower output of the machines.

The machine efficiency of stationary engines based on tests run at normal load vary from 85 to 95 per cent. For preliminary calculations 0.92 may be assumed as a fair average. As the frictional horsepower is fairly constant for all loads, the machine efficiency for the underloads is necessarily much less.

Generator efficiencies vary from 90 to 97 per cent at rated load, tending to rise with the size of unit. For preliminary calculations a value of 0.94 may be assumed. Approximate efficiencies

FIG. 21. APPROXIMATE MOTOR EFFICIENCIES
(*W. S. Aldrich.*)

of various size motors are given by Fig. 21. Efficiencies of pumps, fans, etc., will be found under their respective headings.

Combined Efficiency. The combined efficiency of a system of power generating, transmission and transformation is the product of the various efficiencies of the apparatus used in the system.

Example. Required the i.hp. of engine necessary for the following installation of motor-driven apparatus, motors belted to the machine in each case.

One 8″ centrifugal pump, capacity, 1600 gal. per min.; total head, 100 ft.; efficiency, 0.65.

One ventilating fan, capacity, 10,000 cu. ft. air per min.; 1″ water, total pressure (5.2 lb. per sq. ft.); efficiency, 0.40.

One bucket elevator; capacity, 10 tons coal per hour; vertical lift, 40 ft.; efficiency, 0.50.

Five 10-hp. motors driving machinery.

Efficiency of motors assumed as 0.80; generator efficiency, 0.94; electric transmission line loss, 5 per cent; machine efficiency of engine, 0.92; efficiency of single belt drive, 0.94.

Solution. d.hp. of pump $= \frac{1600 \times 8.33 \times 100}{33000 \times 0.65} = 6.21$; electrical horsepower input to pump motor $= \frac{6.21}{0.75^*} = 8.26$; d.hp. of fan $\frac{10000 \times 5.2}{0.40 \times 33000} = 3.94$; electrical horsepower input to fan motor $= \frac{3.94}{0.75} = 5.25$; electrical horsepower input to elevator motor $= \frac{10 \times 2000 \times 40}{0.50 \times 0.75 \times 60 \times 33000} = 1.07$; electrical horsepower input to motors driving machinery $= \frac{5 \times 10}{0.75} = 66.7$; total electrical horsepower to be delivered to motors $= 8.26 + 5.25 + 1.07 + 66.7 = 81.28$; electrical horsepower at switchboard in power-house $= \frac{81.28}{0.95} = 85.56$; i.hp. of engine $= \frac{85.56}{0.92 \times 0.94} = 98.93$.

Economical Terminal Pressure. Theoretically, the steam should be expanded down to the back pressure carried to obtain maximum economy. As an engine is ordinarily designed to give maximum economy at normal load, this is evidently impractical as the expansion line would necessarily fall below the back pressure line for the underloads, resulting in an extremely poor economy for loads less than normal.

Fortunately, in this respect, maximum economy, particularly with single-cylinder engines, is obtained when the terminal pressure is considerably higher than the back pressure.

The results of tests made by *G. H. Barrus* ("Engine Tests," 1900) to determine the terminal pressure that gives best economy for various classes of engines were as follows:

TABLE 4

Type of Engine	Absolute Terminal Pressure Lb. per Sq. In.
Simple slide-valve engines, non-condensing	30 to 40
Simple slide-valve engines, condensing	25 to 30
Simple Corliss engines, non-condensing	20 to 25
Simple Corliss engines, condensing	15 to 18
Compound engines, non-condensing	18 to 22
Compound engines, condensing	3 to 5

Determination of the Size of Simple Engine Cylinders. The power to be delivered by the engine having been previously determined is stated in brake horsepower if the machine is to drive by means of a belt or ropes. For direct-connected service the output at the generator terminals is stated in kilowatts (kw.) for direct current and kilo-volt-amperes (k.v.a.) for alternating-current machines.

The kilowatt output for alternating-current machines is the product of the volts × amperes × the power factor. The *power factor* is the ratio of the apparent watts, as determined from the readings of the voltmeter and ammeter, to the actual watts, and varies according to the class of load carried by the machine.

The following approximate power factors, as given by the *General Electric Co.*, may be used in making preliminary estimates.

* Efficiency of motor and belt drive.

0.95 when the load is principally made up of synchronous motors and rotary converters.
0.90–0.95 when the load is principally incandescent lamps.
0.85 lighting and induction motors.
0.80 induction motors only.

For example, an A.C. machine rated at 1000 k.v.a. when used to supply current for induction motors only would have a rated output of 1000×0.80 or 800 kw. The efficiency (E_1) of a generator, as previously stated, is the ratio of the electrical horsepower output to the brake horsepower input. The machine efficiency of generators rated from 75 to 300 kw. may be assumed as 0.94 at normal load in preliminary estimates. The machine efficiency (E_2) for simple engines may be assumed as 0.92 at normal load and 0.90 for compound engines. As $\frac{\text{volts} \times \text{amperes}}{1000}$ = kilowatts and 0.746 kw. is the equivalent of one electrical horsepower, the indicated horsepower (i.hp.) required is equal to $\frac{\text{kw.}}{E_1 \times E_2 \times 0.746}$

or $$\text{i.hp.} = \frac{\text{kw.}}{0.94 \times 0.92 \times 0.746} = 1.55 \text{ kw.}$$

The process followed in the determination of the cylinder dimensions will be made clear by the Examples (1) and (2) which follow.

In practice, the process is usually a check on the dimensions as submitted by the engine builder covering the particular case at hand, as illustrated by Example (2)

In case the engine exhaust is to be used for low-pressure heating a back pressure of approximately 4 lb. should be used in the calculations. If the vacuum system of heating is to be employed a back pressure of 2 lb. should be sufficient.

TABLE 5

USUAL PISTON SPEED AND REVOLUTIONS PER MINUTE FOR VARIOUS LENGTHS OF STROKE

Stroke, Inches	R. P. M.*	Piston Speed, Feet per Minute
8	350–400	466–533
9	300–330	450–595
10	300–320	500–533
11	280–300	513–550
12	260–290	530–580
13	250–280	541–606
14	240–260	560–606
16	220–240	586–640
18	200–230	600–690
24	125*	500
30	120	600
36	110	660
42	100	700
48	90	720
54	80	720

* Engines equipped with releasing type of gear are not ordinarily operated at a speed exceeding 125 r.p.m.

TABLE 6

SPEED OF ALTERNATING-CURRENT GENERATORS FOR DIRECT CONNECTION TO HIGH-SPEED ENGINES

K.v.a. Rating	50	75	105	150	240	300	500
Speed r.p.m.	300	276	257	225	200	150	120
†Voltage—3-phase	...	240	480	600	1150	2300	...
Voltage—2-phase	...	240	480	1150	2300	....	...

† Standard. The speeds vary somewhat with different manufacturers.

The direct current 125 volt exciters for the above machines will have a capacity about as follows:

Generator Rating, k.v.a..... 50 — 75 — 105 — 150 — 240 — 300 — 500
Exciter Rating, kw..... 4 — 5 — 7 — 8 — 9 — 10 — 15

The exciters are ordinarily belt driven from the engine and generator shaft, but may be obtained for direct connection to the engine shaft if desired.

TABLE 7

SPEED OF DIRECT-CURRENT GENERATORS FOR DIRECT CONNECTION TO HIGH-SPEED ENGINES

Kw. Rating*...	20	30	40	50	60	75	100	125	150	200	250	300
Speed, r.p.m...	350	350	300	275	275	275	200	250	250	200	200	150

* Standard voltage 110 and 220. The speeds vary somewhat with different manufacturers.

Steam Pressures Employed. Plants in which simple engines are used for the prime movers are now ordinarily designed for a steam pressure of 100 to 125 lb. gage. With compound engines a pressure of 125 to 150 lb. gage is usual, while in steam turbine plants a pressure of 150 to 200 lb. gage is customary.

Cut-off at Normal Rating. It is customary practice to base the normal rating of simple non-condensing engines on a cut-off of ¼ stroke or 4 expansions for the usual initial pressures employed. For single-valve engines this gives about the most economical terminal pressure as stated in Table 4.

Example. Initial pressure 125 lb. gage or 140 lb. absolute terminal pressure with four expansions is 140/4 or 35 lb.

For compound non-condensing engines a terminal pressure of 20 lb. may be used and 10 lb. for compound condensing engines. Based on the above figures Tables 8 and 9 have been calculated:

TABLE 8

MEAN EFFECTIVE PRESSURES FOR SIMPLE ENGINES

Diagram Factor 0.80. Back Pressure 16.7 Pound

Initial Pressure Above Throttle		¼ Cut-off $r = 4$			⅛ Cut-off $r = 3.33$			25% Overload				50% Overload			
								Cut-off at Normal Load							
								¼		⅛		¼		⅛	
Gage	Absolute P_1	Terminal Pr. P_2	Theoretical M.E.P.	Expected M.E.P.	Terminal Pr. P_2	Theoretical M.E.P.	Expected M.E.P.	Expected M.E.P.		Expected M.E.P.		Expected M.E.P.		Expected M.E.P.	
85.3	100	25.0	42.9	34.3	30.3	49.4	39.5	42.9	Cut-off for 25% overload = 0.33 to 0.35	49.3	Cut-off for 25% overload = 0.42 to 0.45	51.4	Cut-off for 50% overload = 0.45 to 0.48	59.3	Cut-off for 50% overload = 0.625 to 0.660
90.3	105	26.2	44.9	36.0	31.5	52.7	42.2	45.0		52.7		54.0		63.3	
95.3	110	27.5	48.9	39.1	33.0	56.0	44.8	48.9		56.0		58.6		67.2	
100.3	115	28.8	51.9	41.5	34.5	59.3	47.4	51.9		59.2		62.2		71.1	
105.3	120	30.0	54.9	44.0	36.0	62.6	50.1	55.0		62.6		66.0		75.2	
110.3	125	31.3	57.9	46.3	37.5	65.9	52.7	57.5		65.9		69.4		79.1	
115.3	130	32.5	60.8	48.6	39.0	69.3	55.4	60.8		69.2		72.9		83.1	
120.3	135	33.8	63.8	51.0	40.5	72.5	58.0	61.3		72.5		76.5		87.0	
125.3	140	35.0	66.8	53.4	42.0	75.8	60.6	64.2		75.8		80.1		91.0	
130.3	145	36.3	69.8	55.8	43.5	79.2	63.4	69.7		79.2		83.7		95.1	
135.3	150	37.5	72.6	58.1	45.3	82.5	66.0	72.6		82.5		87.2		99.0	

Overload Capacities. For direct-connected units both engines and generators, as ordinarily rated and designed, are capable of handling continuous overloads of 25% and 50% momentarily without undue heating of parts.

Simple automatic cut-off engines as ordinarily rated are designed for a cut off of about ⅛ stroke at normal load, and for a 50% overload the cut off must be increased to about $^{6}/_{10}$ of the stroke, the maximum cut off obtainable being approximately $^{7}/_{10}$.

The slow and medium speed Corliss type of engine must be equipped with a double eccentric gear to carry a 50% overload, as the limit of cut off with a single eccentric gear is approximately ¼ stroke. The maximum overload capacity of the prime mover and the regulation required should be clearly stated in the specification and proposal.

Example. (1) Determine the cylinder dimensions for a non-condensing simple engine for direct connection to a 50 kw. direct current generator (normal rating) for the following conditions of operation:

Steam pressure at engine throttle valve 100 lb. gage. Assumed back pressure 2 lb. gage.

Speed from Table 7 is 275 r.p.m. cut off ¼ stroke for normal load.

The theoretical mean forward pressure = 0.5965 (100 + 14.7) = 68.4 lb. per sq. in.

The diagram factor, Table 2, is 0.80. Length of stroke from Table 5 is 12″. The i.hp. = 50 × 1.55 = 77.5. The expected mean effective pressure (m.e.p.) = 0.80 (68.4 − 16.7) = 41.4 lb. per sq. in.

Area of the piston $A = \dfrac{\text{i.hp.} \times 33000}{P_e L N} = \dfrac{77.5 \times 33000}{41.4 \times 1 \times (2 \times 275)} = 112$ sq. in. corresponding diameter = 12″. The engine would be made 12″ x 12″.

Example. (2) The size of cylinder for a 100 kw. unit is given by Table 14 as 14″ x 14″ at 250 r.p.m. initial pressure 120 lb. gage or 135 lb. absolute. The required i.hp. = 1.55 × 100 or 155.

The theoretical mean forward pressure by calculation is 94 lb. for ⅛ cut off or 3.33 expansions.

The expected m.e.p. is 94 × 0.80 (diag. factor) − 16.7 = 58.5. A = area 14″ dia. cylinder or 153.9 sq. in. L = length of stroke or 1.166 ft.

The calculated i.hp. is therefore $\dfrac{58.5 \times 1.166 \times 153.9 \times (2 \times 250)}{33000}$ or 159.

This engine, at normal load, will require approximately 155 × 28½ or 4420 lb. of steam per hour. See economy curves, Fig. 25.

Overload Capacity. If this engine is to carry a 50% overload, the m.e.p. at normal load must be increased by this amount.

The m.e.p. required at maximum load is therefore: 1.5 × 58.5 = 87.7 lb. per sq. in.

Then $0.80 \left(135 \times \dfrac{1 + \log_e r}{r} - 16.7\right) = 87.7$. $\dfrac{1 + \log_e r}{r} = 0.94$. The corresponding value of r from Table 1 is 1.50, the cut off being 0.66 of the stroke, which is within the limit of cut off for single-valve automatic engines.

COMPOUND ENGINES

The loss incident to cylinder condensation is due to the condensing out of a small portion of the steam when brought into contact with the colder cylinder wall. The cylinder wall is maintained at a fairly constant temperature, approximately a mean between the initial and final temperature of the expanding steam.

It is evident that the greater the ratio of expansion the greater will be the temperature range of the steam in the cylinder, the lower the temperature of the cylinder wall and consequently the greater the loss will be from this cause. If the temperature range is reduced by dividing the expansion between two cylinders it is found that the loss is much less than when a single cylinder is used, giving a gain in economy of approximately 10% for non-condensing units, as will be noted by a comparison of the water rate curves (Fig. 25). Were it not for the reduction in the heat loss there would be no reason for compounding which would be sufficient to warrant the expense.

In the compound engine two cylinders are provided. The steam is first admitted to the *high-pressure* cylinder and expanded to several times its original volume, the terminal or final pressure in this cylinder being approximately one-half to one-third of the initial pressure. This expanded volume, at the reduced pressure, is then passed to a second or *low-pressure* cylinder and the expansion completed.

Theoretically, the total expansion is the same as if carried out in the low-pressure cylinder with the same volume of steam and at the same initial pressure as admitted to the high-pressure cylinder.

Combined Indicator Diagram. The action of a compound engine is conveniently studied by means of the theoretical combined indicator card or diagram *abcfghk* (Fig. 22).

All pressures are absolute lb. per sq. in. and all volumes are stated in cubic feet.

Let p_1 = initial absolute pressure high-pressure cylinder.
p_x = terminal pressure high-pressure cylinder.
p_r = back pressure high-pressure cylinder.
= receiver pressure.
= initial pressure low-pressure cylinder.
p_2 = terminal pressure low-pressure cylinder.
p_3 = back pressure low-pressure cylinder.
a = area high-pressure cylinder, sq. in.
A = area low-pressure cylinder, sq. in.
$\frac{a}{A} = R$ = cylinder ratio or ratio of cylinder volumes and also areas, when the strokes are made the same length as is customary practice.
V_1 = volume high-pressure cylinder.
V_2 = volume low-pressure cylinder.

Then $\frac{V_1}{V_2} = \frac{a}{A} = R$

r = total ratio of expansion $= \frac{p_1}{p_2}$

r_1 = ratio of expansion in high-pressure cylinder $= \frac{p_1}{p_x}$

r_2 = ratio of expansion in low-pressure cylinder $= \frac{p_r}{p_2}$

Cut off in high-pressure cylinder $= \frac{1}{R \times r}$.

$$\text{m.e.p. h.p. cyl. (diagram } abck) = p_1 \left(\frac{1 + \log_e r_1}{r_1}\right) - p_r$$

$$\text{m.e.p. l.p. cyl. (diagram } kcfgh) = p_r \left(\frac{1 + \log_e r_2}{r_2}\right) - p_3$$

m.e.p. of h.p. $\times$ a + m.e.p. of l.p. $\times$ A = work per foot of stroke both cylinders.
But $a = AR$.
Then A(m.e.p. of h.p. $\times$ R + m.e.p. of l.p.) = work per foot of stroke, both cylinders
For equal work developed in each cylinder m.e.p. of h.p. $\times$ R = m.e.p. of l.p.

When the cut off for the low-pressure cylinder is such that the volume displaced by the low-pressure piston at the point of cut off is equal to the volume of the high pressure cylinder, then $p_x = p_r$. If the cut off in the low-pressure cylinder is lengthened so that the volume drawn from the receiver is greater than the high-pressure cylinder volume there occurs a drop, free expansion, in pressure from p_x to p_r at release in the high-pressure cylinder, as shown by cards *abcei* and *idfgh*. The effect of lengthening the cut off in the low-pressure cylinder results in an

increase in the m.e.p. of the high-pressure cylinder, with a corresponding decrease in the m.e.p. of the low-pressure cylinder.

The examples following serve to illustrate the principles involved.

Calculations for the Cylinder Dimensions for Compound Engines. The cylinder ratio or the ratio of the volume of the high-pressure to the volume of the low-pressure cylinder is usually made such that the work is approximately equally divided between the two cylinders at normal

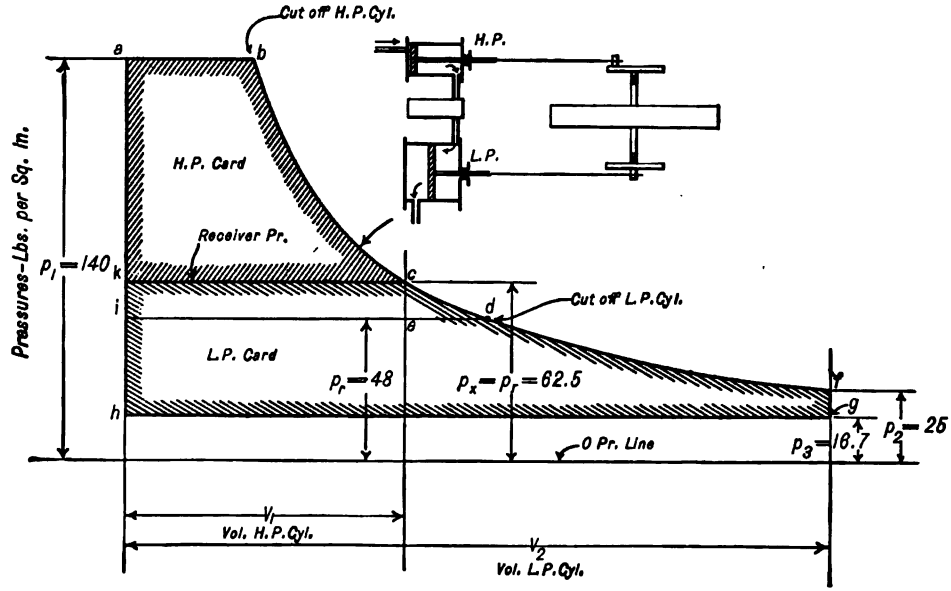

FIG. 22. COMBINED PRESSURE-VOLUME DIAGRAM FOR A COMPOUND ENGINE.

or rated capacity. For non-condensing engines this ratio is usually made 1 to 2½ or 3 and for condensing machines 1 to 3½ or 4. The division of the load between the cylinders may be made by adjusting the length of cut-off in the low-pressure cylinder. As the low-pressure cut-off is lengthened the lower becomes the receiver or back pressure on the high-pressure cylinder, increasing the work done by this piston and decreasing the work performed in the low-pressure cylinder.

In cross-compound engines of standard construction the strokes of the high and low-pressure cylinders are made the same and are of necessity the same for the tandem type. Therefore, having decided upon the stroke and area of the low-pressure piston the area of the high-pressure piston is obtained by dividing the area of the low-pressure piston by the cylinder ratio.

The area of the low-pressure piston is calculated on the assumption that *all* of the work is to be performed in this cylinder in the same manner as for the case of the simple engine. That this assumption is correct is evident from an inspection of the combined indicator card (Fig. 22). If the intermediate line (receiver pressure line) is removed the card would be that for a simple cylinder of the same volume of the low-pressure cylinder.

Hence if the same initial pressure is used in a cylinder of the size of the low-pressure cylinder and if the same total ratio of expansion be used, this cylinder, theoretically, will develop the same power as the compound engine.

Usual Assumptions. It is usual to assume about the following absolute terminal and back pressures in compound engine calculations for the normal or rated load. Terminal pressure p_2 = 20 to 25 lb. for non-condensing and 10 lb. for condensing engines.

Back pressure p_3 = 16.7 lb. for non-condensing and 2 to 3 lb. for condensing engines corresponding to a 25.92 in. and 23.88 in. vacuum.

If the engine is to be able to carry a 50 per cent overload the cut off in the high-pressure cylinder should be estimated in advance for the overload and kept within the limit of the range of cut off of the valve gear. The following example illustrates this point:

TABLE 9

MEAN EFFECTIVE PRESSURES FOR COMPOUND ENGINES

NON-CONDENSING

Terminal Pressure p_2 = 20, Back Pressure p_3 = 16.7, Diagram Factor = 0.75, Cylinder Ratio R = 1 : 2.5

Initial Pressure		Ratio of Expansion r	Cut Off H. P. Cylinder *	Terminal Pressure p_2	Theoretical M.E.P.	Expected M.E.P.	50% Overload	
Gage	Absolute p_1						Expected M.E.P.	Cut Off H. P. Cyl.*
120.3	135	6.75	0.370	20	41.5	31.1	46.6	0.600
125.3	140	7.00	0.357	20	42.2	31.6	47.4	0.590
130.3	145	7.25	0.344	20	42.9	32.1	48.2	.....
135.3	150	7.50	0.333	20	43.9	32.7	49.0	.....
140.3	155	7.75	0.323	20	44.2	33.0	49.5	.....
145.3	160	8.00	0.313	20	44.9	33.7	50.6	0.500
150.3	165	8.25	0.303	20	45.6	34.1	51.6	.....
155.3	170	8.50	0.294	20	46.0	34.5	51.8	.....
160.3	175	8.75	0.286	20	46.6	35.0	52.5	0.455

CONDENSING

Terminal Pressure p_2 = 10, Back Pressure p_3 = 3, Diagram Factor = 0.75, Cylinder Ratio R = 1 : 4

125.3	140	14.	0.285	10	33.4	25.0	37.5	0.55
135.3	150	15.	0.266	10	34.1	25.5	38.3	.....
145.3	160	16.	0.250	10	34.7	26.0	39.0	.....
150.3	165	16.5	0.242	10	35.0	26.2	39.3	0.42
155.3	170	17.	0.235	10	35.3	26.5	39.8	.....
165.3	180	18.	0.222	10	35.9	27.0	40.5	.....
175.3	200	20.	0.200	10	36.9	27.6	41.4	0.33

* Cut off in H. P. cylinder = $\frac{1}{R \times r}$.

Example. Determine the cylinder dimensions for a compound non-condensing engine direct connected to a 200 kw. D. C. machine the rated speed of which is 200 r.p.m. Initial pressure 125 lb. gage, atmospheric exhaust. 2 lb. gage back pressure.

Assume a terminal pressure p_2 = 25 lb., a diagram factor of 0.75, and a cylinder ratio R of 1: 2.5.

This gives for the total expansion ratio $r = \frac{140}{25} = 5.5$. The value of $\frac{1 + \log_e r}{r}$ from Table 1 for $r = 5.5$ is 0.492.

Expected m.e.p. referred to the low-pressure cylinder = 0.75 (140 × 0.49 − 16.7) = 39 lb. sq. in.

From Table 5 an 18″ stroke will be assumed for the rotative speed to be employed L = 1.5 ft. N = 400.

I.hp. required is 200 × 1.55 or 310.

$$\text{Area low-press. cylinder} = \frac{310 \times 33000}{39 \times 1.5 \times 400} = 437. \text{ sq. in.}$$

Corresponding diameter $23\frac{5}{16}$″.

For a cylinder ratio of 1:2.5 the area of high-pressure cylinder is 437 ÷ 2.5 or 175 sq. in. Corresponding diameter 15″.

The engine may therefore be made 15″ × 24″ × 18″. Compare with the cylinder dimensions given by Table 17 for this size unit. This engine will not carry a 50% overload as shown by the example following.

Cut Off in High-Pressure Cylinder for Fifty Per Cent Overload Capacity. In order that the engine may carry an overload of 50% the m.e.p. at normal load must be increased by this amount. The m.e.p. required at maximum load for the engine in the preceding example is: $1.5 \times 39 = 58.5$ lb. per sq. in.

Then $0.75\left[140\left(\frac{1+\log_e r}{r}\right)-16.7\right]=58.5$ in which 0.75 is the assumed diagram factor at 50% overload.

$\frac{1+\log_e r}{r} = 0.676$. The corresponding value of r from Table 1 is 3.3.

The cut off required in the high-pressure cylinder is therefore $\frac{1}{3.3} \times 2.5$ (cyl. ratio) or 0.76 of the stroke.

This is beyond *the limit* of cut off obtainable with automatic single-valve engines, and it would, therefore, be necessary to choose a lower terminal pressure for the normal load, thus obtaining a greater total ratio of expansion. If $p_2 = 20$ lb. abs., then $r = 7$ and the expected m.e.p. referred to the low-pressure cylinder is 31.6 (see Table 9). Area of the low-pressure cylinder is 540 sq. in. and the corresponding diameter is 26¼". The cut off in the high-pressure cylinder is found to be 0.57, which is within the limit of the range of cut off for automatic single-valve engines. Area of high-pressure cylinder will be 540/2.5 or 216 sq. in., corresponding to a 16½ in. diameter.

Division of Work between Cylinders. Assuming no drop in pressure exists at the end of stroke in the h.p. cylinder that is $p_x = p_r$ we have the relation $p_1 V_c = p_x V_1 = p_r V = p_2 V_2$

$p_1 = 140$ (nearly) $p_2 = 25$. $R = \frac{V_1}{V_2} = \frac{1}{2.5}$.

$p_2 = p_x \frac{V_1}{V_2}$ or $p_x = 25 \times 2.5 = 62.5$ lb. sq. in.

Then $r_1 = \frac{140}{62.5} = 2.2$ and $r_2 = \frac{62.5}{25} = 2.5$.

Theor. m.e.p. high-press. cyl. $= 140\left(\frac{1+\log_e 2.2}{2.2}\right) - 62.5 = 51.3$.

Theor. m.e.p. low-press. cyl. $= 62.5\left(\frac{1+\log_e 2.5}{2.5}\right) - 16.7 = 31.2$.

For equal work in each cylinder m.e.p. of h.p. cyl. $\times R$ should equal m.e.p. of low-pressure cylinder.

$51.3 \times \frac{1}{2.5} = 20.5$ lb. per sq. in. It is seen that the low-pressure cylinder will be doing more work in this case so that a reduction in the receiver pressure is necessary to obtain an equal division between the two cylinders. Try $p_r = 48$, then the

Theor. m.e.p. of h.p. cyl. $= 140\left(\frac{1+\log_e 2.2}{2.2}\right) - 48 = 65.8$, $r_2 = \frac{48}{25} = 1.9$.

Theor. m.e.p. of l.p. cyl. $= 48\left(\frac{1+\log_e 1.9}{1.9}\right) - 16.7 = 24.5$.

Then $65.8 \times \frac{1}{2.5}(R) = 26$. m.e.p. of high-pressure cylinder referred to the low pressure.

Approximately equal work will therefore be performed in each cylinder for the assumed conditions of operation.

The reduction in receiver pressure is obtained by lengthening the low-pressure cut-off as shown.

Temperature Range in the Cylinders.

Temperature corresponding to 140. lb. is 353.1° F.
Temperature corresponding to 48. lb. is 278.4° F.
Temperature corresponding to 16.7 lb. is 218.° F.
Temperature range h.p. cylinder is 353.1 − 278.4 = 74.7° F.
Temperature range l.p. cylinder is 278.4 − 218. = 60.4° F.

STANDARD OF PERFORMANCE FOR STEAM ENGINES AND TURBINES

The Rankine Cycle. The *Rankine* or *Clausius* cycle is quite generally accepted as a standard of comparison for the performance of steam engines and steam turbines. In this ideal cycle

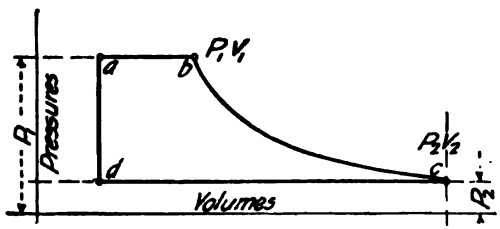

FIG. 23. RANKINE'S CYCLE.

steam is assumed to be expanded adiabatically in a non-conducting cylinder without clearance, the expansion being carried down to the back-pressure line. The diagram (Fig. 23) represents the action of steam or other vapor when operating on the *Rankine* cycle with complete expansion.

P_1, P_2 = initial and final absolute pressure, lb. per sq. ft.
v_1'', v_2'' = specific volume of saturated steam corresponding to P_1 and P_2.
v_1', v_2' = specific volume of the liquid corresponding to P_1 and P_2.
V_1, V_2 = initial and final volumes, cu. ft.
q_1 = heat of liquid corresponding to initial pressure, P_1.
q_2 = heat of liquid corresponding to final pressure, P_2.
x_1 = quality of vapor admitted to cylinder.
x_2 = quality of vapor exhausted.
ρ_1 = internal latent heat, initial state.
ρ_2 = internal latent heat, final state.
u_1, u_2 = increase in the volume per lb. in changing from a liquid to the vapor state corresponding to pressures P_1 and P_2. $u_1 = v_1'' - v_1'$, $u_2 = v_2'' - v_2'$.
r_1, r_2 = total heat of vaporization corresponding to pressures P_1 and P_2.
A = 1/778 reciprocal of the mechanical equivalent of heat.
$r_1 = \rho_1 + AP_1u_1$. $r_2 = \rho_2 + AP_2u_2$.
$V_1 = x_1(v_1'' - v_1') + v_1'$. $V_2 = x_2(v_2'' - v_2') + v_2'$.

If a vapor be used in a non-condensing cylinder without clearance and the expansion carried down to the back pressure line we would obtain a diagram giving the relation between the pressure and volume similar to the ideal diagram (Fig. 23).

The vapor is admitted to the cylinder, at constant absolute pressure, P_1, from a to b. At b cut off occurs and the vapor expands adiabatically to c, at which point the exhaust opens and the vapor is exhausted at a constant absolute pressure P_2.

For one pound of vapor admitted to the cylinder the work performed by the vapor on the piston from a to b is:

$$P_1V_1 = P_1[x_1(v_1'' - v_1') + v_1'] = P_1(x_1u_1 + v_1') \quad . \quad . \quad . \quad . \quad . \quad . \quad . \quad . \quad . \quad . \quad . \quad (1)$$

For expansion from b to c the heat that is changed into work is

$$= 778\ (q_1 - q_2 + x_1\rho_1 - x_2\rho_2) \text{ ft.-lb.} \quad . \quad . \quad . \quad . \quad . \quad . \quad . \quad . \quad . \quad . \quad . \quad . \quad . \quad (2)$$

The work performed by the vapor *on* the piston from c to d is

$$P_2V_2 = P_2[x_2(v_2'' - v_2') + v_2'] = P_2(x_2u_2 + v_2') \quad . \quad . \quad . \quad . \quad . \quad . \quad . \quad . \quad . \quad . \quad . \quad (3)$$

The net work W performed on the piston by the vapor is (1) + (2) − (3) or

$$W = 778\ [q_1 + x_1\rho_1 + AP_1x_1u_1 - q_2 - x_2\rho_2 - AP_2x_2u_2 + A(P_1v_1' - P_2v_2')] \quad . \quad (4)$$

Since the last term is small it may be dropped without appreciable error. Substituting $xr = x\ (\rho + APu)$ in the above equation, we have $W = 778\ (q_1 + x_1r_1 - q_2 - x_2r_2)$ ft.-lb. per pound of vapor supplied.

Let Q_1 = total heat per lb. initial state.

$= q_1 + x_1r_1$ saturated vapor.

Q_2 = total heat per lb. final state.

$= q_2 + x_2r_2$.

Then $W = 778\ (Q_1 - Q_2)$ ft.-lb. of work performed per lb. of vapor supplied.

If the vapor is initially superheated then $Q_1 = H_1 + C_{ps}(t - t_s)$ in which H_1 = the total heat of saturated vapor per lb. $= q_1 + r_1$.

C_{ps} = mean specific heat of superheated steam. (See "Mean Specific Heat Curves" in the Chapter on "Water, Steam and Air.")

t = temperature of the superheated steam.

t_s = temperature of saturated steam corresponding to pressure P_1.

The determination of the final quality x_2, after adiabatic expansion has taken place, involves the use of the quantity *entropy*. Entropy, as defined in the Chapter on "Water, Steam and Air," is the ratio of the heat added to a substance divided by the absolute temperature at which it is added, values for which are given by the steam tables.

When expansion or contraction of a gas or vapor takes place without loss or gain of heat the change is said to be *adiabatic*, therefore the entropy remains constant for such a change. This affords a means for determining the final quality x_2 and therefore Q_2 as follows:

If the vapor is initially dry or wet saturated, the necessary data will be found in the saturated steam table.

S_1', S_2' = entropy of the liquid corresponding to the initial and final states.

$\frac{x_1r_1}{T_1}$, $\frac{x_2r_2}{T_2}$ = entropy of the vapor, initial and final states in which T_1, T_2 = the initial and final absolute temperatures.

Then $S_1' + \frac{x_1r_1}{T_1} = S_2' + \frac{x_2r_2}{T_2}$ from which the value of x_2 may be determined.

If the vapor is initially superheated the entropy of the superheated vapor may be roughly approximated by the following method.

The heat added due to the superheating $= C_{ps}(t - t_s)$ and the *average* absolute temperature at which it is added is $T_a = \frac{(t + 460) + (t_s + 460)}{2}$.

The entropy of the superheated vapor may therefore be stated as.

$$S_1 = S_2' + \frac{r_2}{T_2} + \frac{C_{ps}(t - t_s)}{T_a}.$$

The above approximate method involves an error which, however, is not particularly serious when the superheating does not exceed 200 degrees.

For exact values of S_1 see *Goodenough's* tables for superheated steam.

If the vapor is initially wet or saturated we have the relation $S_1 = S_2' + \frac{x_2 r_2}{T}$ from which the value of x_2 may be determined.

All problems involving adiabatic expansion are solved with rapidity and sufficient accuracy by means of the *Mollier* chart or diagram in the Chapter on "Steam Turbines."

The chart has largely supplanted the steam tables in this connection.

Example. Required the amount of heat changed into work per pound of steam supplied an engine or turbine working on the *Rankine* cycle. Initial pressure = 125 lb. absolute, 100° superheat with an exhaust or terminal pressure of 2 lb. absolute.

$t_s = 344.4°$ F. and $t = t_s + 100$ or 444.4° F.

The average specific heat of superheated steam for the range of temperature stated is 0.556.

The heat added for superheating is $100 \times 0.556 = 55.6$ B.t.u. and the average absolute temperature at which it is added is $\frac{344 + 444}{2} + 460 = 854°$. The increase in entropy due to superheating is $\frac{55.6}{854}$ or 0.065. The entropy of the liquid is $S' = 0.4950$ and for vaporisation is $\frac{r_1}{T_1} = 1.0908$. The entropy of superheated steam under the conditions stated is $S_1 = 0.495 + 1.091 + 0.065 = 1.651$ or from *Goodenough's* tables direct is 1.651.

The entropy for the final condition is $S_2 = S_2' + \frac{x_2 r_2}{T_2}$. As the expansion is assumed to take place adiabatically $S_1 = S_2$.

For 2 lb. pressure $\frac{r_2}{T_2} = 1.7452 \quad S_2' = 0.1750$.

Then $1.65 = x_2 \times 1.7452 + 0.1750. \quad x_2 = 0.85 +$

The heat that is changed into indicated work per pound of steam used is the difference between the heat received by the engine $Q_1 = q_1 + r_1 + C_p(t - t_s)$ and that rejected, or $Q_2 = x_2 r_2 + q_2$.

Therefore $W = 778\ [q_1 + r_1 + C_p\ (t - t_s) - x_2 r_2 - q_2]$ or $W = 778\ (315.1 + 876.9 + 0.556 \times 100 - 0.85 \times 1022.2 - 94.0) = 221{,}520$ ft.-lb. per pound of steam supplied. From this must be subtracted an amount equivalent to the losses that occur in the actual engine to obtain the work delivered by the crank shaft.

EFFICIENCY STANDARDS

There are two standards used in estimating or making comparisons of engine and steam turbine performance.

Thermal Efficiency. The transformation of heat energy into mechanical work *is always accompanied by an unavoidable loss.*

For example, heat is supplied a boiler and as a result water is evaporated into steam. The heat that it is necessary to supply to produce one pound of steam is the sum of heat required to raise the temperature of the feed water from its initial temperature to the temperature corresponding to the pressure existing in the boiler plus the latent heat of vaporization corresponding to this pressure.

The steam generated is used in an engine or turbine and the same weight of steam at a lower pressure and heat content is exhausted or rejected by the machine. The latent heat of the exhaust steam, in so far as the engine is concerned, is *a direct loss* inasmuch as there is no means of transforming it into useful work. A portion of the latent heat, however, may be utilized in raising the temperature of the feed water, supplied the boiler, up to practically the temperature of exhaust steam, and is so considered in this connection. It is evident that the less the weight of steam required to perform a definite amount of work the more efficient the engine is as an energy conversion medium.

The steam consumption or water rate of an engine or turbine is also used as a means of comparing the economic performance of this class of prime mover. *The thermal efficiency of an engine* is defined as the ratio of the heat converted into work in the steam cylinder per pound of steam supplied to the heat supplied per pound of the steam.

Let q_1 = heat of the liquid corresponding to the initial pressure of the steam at the engine.

q_2 = heat of the liquid corresponding to the pressure and temperature of the exhaust steam.

r_1 = latent heat corresponding to the initial pressure.

x_1 = quality of the steam supplied engine.

Then $x_1r_1 + q_1 - q_2$ = heat supplied, per pound, to the steam as used by the engine.

W = weight of water used per indicated horsepower developed per hour (i.hp.-hour).

1 B.t.u. = 778 ft.-lb. 1 hp. = 33,000 ft.-lb. per minute. Therefore 1 hp.-hour is the equivalent of

$$\frac{33{,}000 \times 60}{778} \text{ or } 2546 \text{ B.t.u. per hour.}$$

The heat transformed into useful or indicated work in the steam cylinder per pound of steam or water supplied is equal to

$$Q_a = \frac{2546}{W} \text{ B.t.u.}$$

The *thermal efficiency* of the actual engine according to the definition given is therefore

$$N_a = \frac{2546}{W(x_1r_1 + q_1 - q_2)}.$$

Example. The steam consumption of a certain engine is (W) 35 pounds per i.hp.-hour when supplied with dry and saturated steam at 120 lb. per square inch gage with atmosphere exhaust (14.7 lb. per sq. in. absolute) $x_1 = 1$, $r_1 + q_1 = 1193.2$; $q_2 = 180$. The *thermal efficiency* of the actual engine is therefore:

$$N_a = \frac{2546}{35\ (1193.2 - 180)} = 0.0719 \text{ or } 7.2\%.$$

The *thermal efficiency of the ideal Rankine engine* is similarly defined as the ratio of the heat converted into work in the steam cylinder per pound of steam supplied to the heat supplied per pound of steam. In the *Rankine* engine the expansion takes place adiabatically.

Let Q_1 = heat content of the steam supplied per pound.

$= x_1r_1 + q_1$.

Q_2 = heat content of the steam rejected per pound.

$= x_2r_2 + q_2$.

Knowing the initial and back, or exhaust pressures and the numerical values of x_1r_1 and q_1, the theoretical final heat content Q_2 is readily determined by means of the *Mollier* chart or the entropy tables.

$Q_1 - Q_2$ = heat converted into work per pound of steam supplied in the ideal *Rankine* engine.

The heat supplied the engine per pound of steam is as before given or $x_1r_1 + q_1 - q_2$.

The thermal efficiency of the ideal *Rankine* engine is therefore:

$$N_R = \frac{Q_1 - Q_2}{x_1r_1 + q_1 - q_2}$$

The steam consumption per i.hp.-hour or water rate of the ideal *Rankine* engine is:

$$W_R = \frac{2546}{Q_1 - Q_2} \text{ lb.}$$

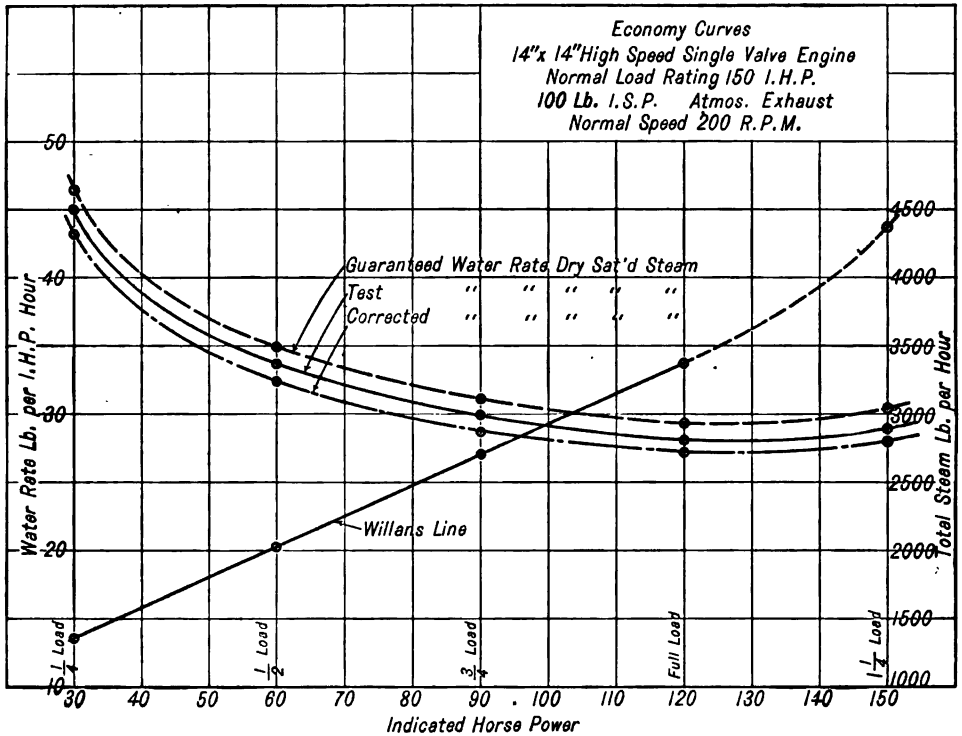
Economy Curves
14"x 14"High Speed Single Valve Engine
Normal Load Rating 150 I.H.P.
100 Lb. I.S.P. Atmos. Exhaust
Normal Speed 200 R.P.M.
Guaranteed Water Rate Dry Sat'd Steam
Test " " " " "
Corrected " " " " "
Willans Line
Water Rate Lb. per I.H.P. Hour
Total Steam Lb. per Hour
Indicated Horse Power
1/4 Load
1/2 Load
3/4 Load
Full Load
1-1/4 Load

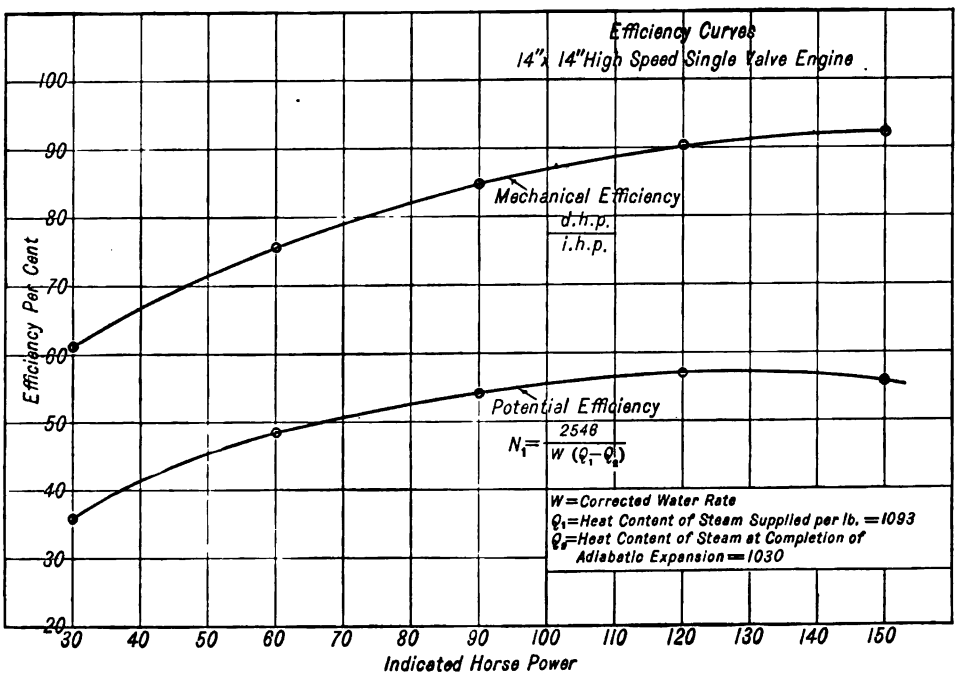
Efficiency Curves
14"x 14"High Speed Single Valve Engine
Mechanical Efficiency
d.h.p.
i.h.p.
Potential Efficiency
N1 = 2546 / W (Q1 − Q2)
W = Corrected Water Rate
Q1 = Heat Content of Steam Supplied per lb. = 1093
Q2 = Heat Content of Steam at Completion of Adiabatic Expansion = 1030
Efficiency Per Cent
Indicated Horse Power

FIG. 24.

Example. The thermal efficiency of the ideal Rankine engine working between the same pressure limits as given in the preceding example, may be calculated as follows:

$Q_1 = 1193.2$. From the *Mollier* chart $Q_2 = 1035$ (approximately).

Then $N_R = \dfrac{1193.2 - 1035}{1193.2 - 180} = 0.156$ or 15.6%.

The *theoretical steam consumption of the ideal Rankine engine* for the given conditions is:

$$W_R = \frac{2546}{Q_1 - Q_2} = \frac{2546}{1193.2 - 1035} = 16.1 \text{ pounds per i.hp.-hour.}$$

TABLE 10

STEAM CONSUMPTION, IDEAL RANKINE CYCLE

Pounds of Steam per Hp.-Hour

Pressure p_1 Pounds per Square Inch, Absolute	Saturated Steam		Superheat					
			50° F.		100° F.		200° F.	
	Back Pressure p_2, Pounds per Square Inch, Absolute							
	15	2	15	1	15	1	15	1
80	20.8	10.6	20.2	8.9	19.3	8.8	17.6	8.1
90	19.6	10.2	18.9	8.7	18.1	8.5	16.5	7.9
100	18.5	9.9	17.8	8.5	17.1	8.3	15.7	7.8
110	17.6	9.7	17.0	8.3	16.3	8.1	15.0	7.6
120	16.8	9.5	16.2	8.2	15.6	7.9	14.4	7.4
130	16.2	9.3	15.6	8.0	15.0	7.8	13.9	7.3
140	15.7	9.1	15.1	7.9	14.6	7.7	13.5	7.2
150	15.2	9.0	14.7	7.8	14.1	7.6	13.0	7.1
160	14.8	8.9	14.3	7.7	13.7	7.5	12.7	7.0
170	14.4	8.8	13.9	7.6	13.4	7.4	12.4	6.9
180	14.1	8.7	13.6	7.5	13.1	7.3	12.1	6.9
190	13.8	8.6	13.3	7.4	12.8	7.2	11.9	6.8
200	13.5	8.5	13.0	7.3	12.6	7.1	11.6	6.7
220	13.1	8.3	12.6	7.2	12.1	7.0	11.2	6.6
250	12.5	8.1	12.0	7.1	11.6	6.9	10.8	6.5

Potential Efficiency. The thermal efficiency, however, is not generally considered as satisfactory a basis for making comparisons of performance of steam motors as another ratio termed the *potential efficiency or efficiency ratio.*

Indicated potential efficiency is defined as the ratio of the heat converted into indicated work in the actual engine to the heat converted into indicated work by the ideal *Rankine* engine working between the same pressure limits. We have here a ratio which expresses the degree which the actual engine transforms into work the heat that might possibly be converted into work by a perfect engine.

$$\text{Potential efficiency } N_i = \frac{Q_a}{Q_R} = \frac{\dfrac{2546}{W}}{Q_1 - Q_2} \text{ or } \frac{2546}{W(Q_1 - Q_2)}$$

The most useful criterion and one which takes into account the engine friction as well is known as the " brake potential efficiency " or

$$N_b = \frac{2546}{W_b(Q_1 - Q_2)}$$

W_b being the steam consumption in pounds per brake horsepower of the actual engine. As we have no means of determining the indicated horsepower of a turbine the " brake potential efficiency " is one that is frequently made use of in this connection.

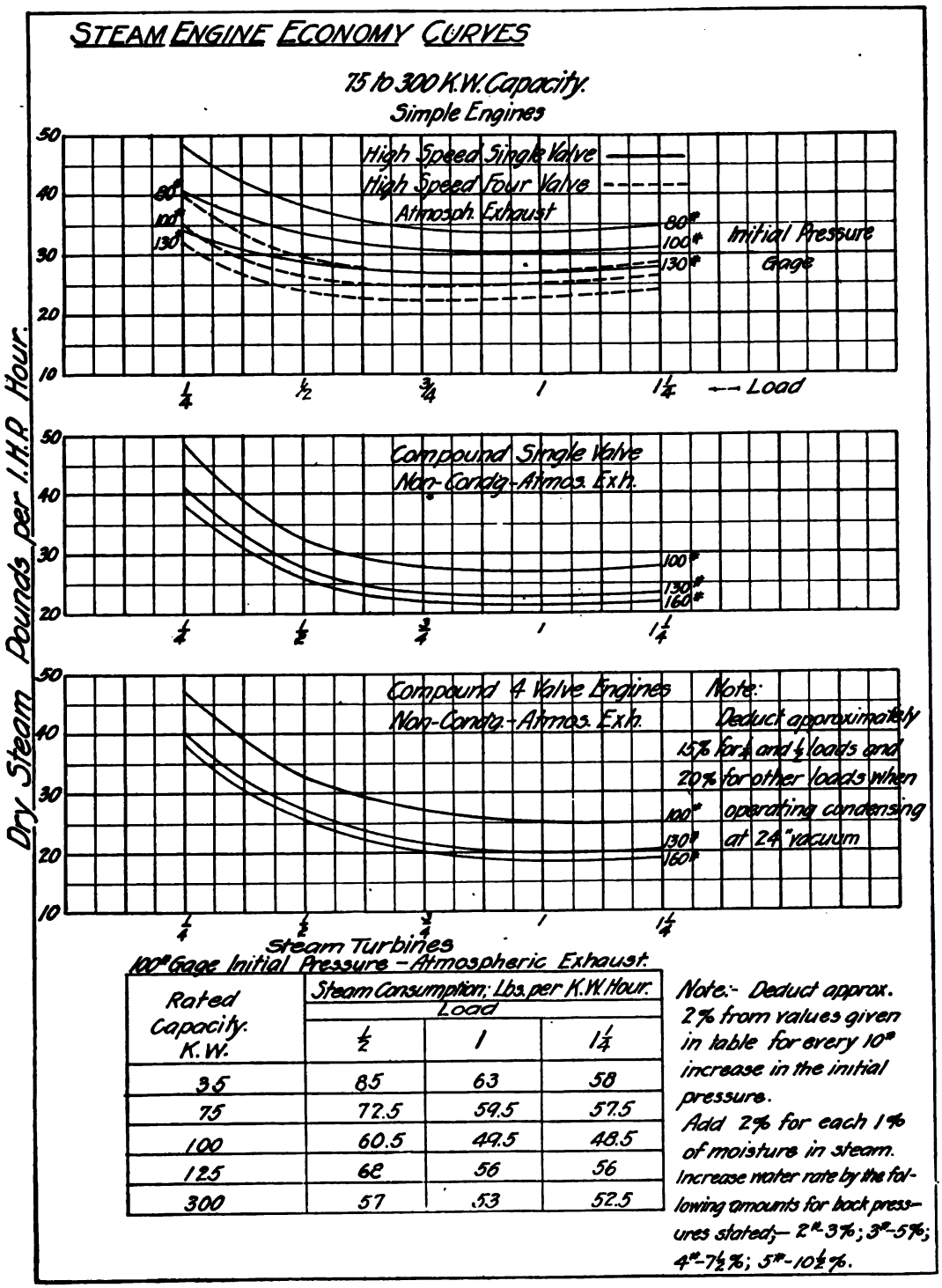

Steam Turbines

100# Gage Initial Pressure – Atmospheric Exhaust.

Rated Capacity: K.W.	Steam Consumption: Lbs. per K.W. Hour. Load		
	½	1	1¼
35	85	63	58
75	72.5	59.5	57.5
100	60.5	49.5	48.5
125	62	56	56
300	57	53	52.5

Note:- Deduct approx. 2% from values given in table for every 10# increase in the initial pressure.

Add 2% for each 1% of moisture in steam.

Increase water rate by the following amounts for back pressures stated;– 2#-3%; 3#-5%; 4#-7½%; 5#-10½%.

FIG. 25.

Example. The potential efficiency of the actual engine, the data for which are given by the preceding examples, is:

$$N_i = \frac{2546}{35\ (1193.2 - 1035)} = 0.46 \text{ or } 46\%.$$

That is to say this particular engine cylinder transforms into useful indicated work 46% of the amount that is theoretically possible to transform in a perfect engine working on the *Rankine* cycle for complete expansion between the same pressure limits.

Steam Consumption or Water Rate. The most generally used measure of the economic performance of steam engines and turbines is the weight of dry steam, as determined by tests, used per hour per unit of power developed by the machine. This is frequently termed the *water rate* of the machine. The water rate is ordinarily determined by weighing the feed water for non-condensing engines and the condensate for condensing engines.

For reciprocating engines the steam consumption or water rate is ordinarily stated as the weight of dry saturated steam supplied the engine per indicated horsepower per hour.

For steam turbines the steam consumption is stated as the weight of steam supplied per brake horsepower-hour or per electrical horsepower-hour or kilowatt-hour. The power developed per unit weight of steam supplied varies with the initial pressure, initial quality or superheat and the back pressure or degree of vacuum maintained. It is therefore essential to state these conditions in every case, in order that a comparison may be made and that the data may be used properly and not applied to conditions other than obtained during the test.

A knowledge of the water rate of the machine proposed is essential in order that the size of boilers and other parts of the steam plant may be proportioned to generate and handle the required amount of steam.

The curves Fig. 25 and Table 11 may be used in this connection. The curves are fair averages of the results that may be expected from well designed machines.

TABLE 11

APPROXIMATE STEAM OR WATER CONSUMPTION

Of Various Types of Engines, in Pounds per Indicated Horsepower per Hour at Normal Load

Non-Condensing

Horse Power Rating of Engine	Simple Single-Valve Throttling Engines	Simple Single-Valve Automatic Engines 100 Lb. I.P	Simple Four-Valve Automatic Engines 100 Lb. I.P.	Simple Corliss Engines 100 Lb. I.P.	Tandem or Cross-Compound Four-Valve and Corliss Engines 100 Lb. I.P.	Tandem or Cross-Compound Four-Valve and Corliss Engines 125 Lb. I.P.	Tandem or Cross-Compound Four-Valve and Corliss Engines 150 Lb. I.P.
10.....	48 to 52	.....	.....	.....	.....	.....	.....
20.....	46 to 50	36 to 39	.....	.....	.....	.....	.....
30.....	44 to 48	35 to 38	.....	.....	.....	.....	.....
40.....	42 to 46	33 to 36	.....	.....	.....	.....	.....
50.....	40 to 44	31 to 34	27 to 29	.....	.....	.....	.....
60.....	39 to 43	30 to 33	26 to 28	.....	.....	.....	.....
70.....	39 to 43	30 to 33	25 to 27	25 to 27	.....	.....	.....
80.....	38 to 42	29 to 32	25 to 27	25 to 27	22 to 24	.....	.....
90.....	38 to 42	29 to 32	25 to 27	25 to 27	22 to 24	.....	.....
100.....	38 to 42	28 to 31	25 to 27	25 to 27	21 to 23	19 to 21	18 to 20
150.....	37 to 41	28 to 31	25 to 27	25 to 27	20 to 22½	18 to 20½	18 to 19½
200.....	37 to 41	28 to 31	24 to 26½	24 to 26½	20 to 22	18 to 20	17 to 19
250.....	37 to 41	28 to 31	24 to 26	24 to 26	19 to 21½	18 to 19½	17 to 18½
300.....	37 to 41	28 to 31	24 to 26	24 to 26	19 to 21½	18 to 19½	17 to 18½
400.....	37 to 41	28 to 31	23 to 25	23 to 25	19 to 21	17 to 19	17 to 18
500.....	37 to 41	28 to 31	23 to 24	23 to 24	18 to 20½	17 to 18½	16 to 17½
600.....	.....	.....	.....	.....	18 to 20	17 to 18	16 to 17
700.....	.....	.....	.....	.....	18 to 20	17 to 18	16 to 17
800.....	.....	.....	.....	.....	.....	16 to 17½	15 to 16½
900.....	.....	.....	.....	.....	.....	16 to 17½	15 to 16½
1000.....	.....	.....	.....	.....	.....	.....	15 to 16

The foregoing table was compiled by the *Atlas Engine Co.*, principally from the records of a large number of actual tests made under favorable conditions. It is, perhaps, not entirely

free from individual errors, but is sufficiently accurate to afford an approximate idea of the amount of water, in the form of dry steam, an engine of a certain size and type will require; also, a comprehensive basis for comparison of various types of engines, from the standpoint of economical performance.

When running condensing, with normal load and maintaining 26 inches of vacuum, the consumption of steam, or water, is reduced about as follows: With 100 pounds initial pressure, 25 per cent; with 125 pounds initial pressure, 20 per cent; with 150 pounds initial pressure, 15 per cent, not considering the steam used to operate the vacuum pump for the condenser and pump the cooling water.

TABLE 12

SINGLE-VALVE AND HIGH-SPEED FOUR-VALVE NON-CONDENSING ENGINE ECONOMIES COMPARED AFTER SEVERAL MONTHS' RUN

Type	"Steam-Tight" Single-Valve	"Steam-Tight" Single-Valve	"Non-Releasing Gear Corliss"	"Non-Releasing Gear Corliss"	Compound with Steam-Tight Single Valves
City	Boston	New York	Mentor, O.	Rochester	Buffalo
Engine run since valves refitted	1-2 mos.	6 mos.	3 mos.	3 mos.	12 mos.
Size	16 x 16	15 x 15	14 x 16	16 x 18	16 & 27 x 18
Steam pressure, pounds	103.4	98.5	106.1	138.0	126.0
Back pressure	1.0	1.8	1.0	1.5	1.0
Kw. of generator	125.	100.	100.	150.	250.
Kw. during test	104.6	92.	102.	143.	235.
Steam per hour, pounds	4512.	4143.	5155.	6006.	8110.
I.hp. per hour	173.4	159.7	178.5	223.	383.1
Steam per i.hp.-hour	26.0 lb.	25.95	28.88	26.9	21.1

TABLE 13

RESULTS OF COMPOUND HIGH SPEED NON-CONDENSING ENGINE TESTS

Size of engine	15-1/32 & 25-1/32" x 20	16½ & 28 x 20
Rated horsepower	320	400
Rated capacity of generator, kw	200	250
Average steam pressure, pounds	132.56	131.23
Back pressure at mid-stroke above atmosphere, pounds per sq. in.	1.	0.95
Total water fed per hour, pound	5838.75	7728.33
Loss of steam and water per hour, due to drips, pounds	87.25	97.
Loss of steam and water per hour, due to leakage, pounds	659.	659.
Moisture in steam at throttle, by throttling calorimeter, per cent	1.72	1.43
Net dry steam consumed per hour, pounds	5004.91	6872.63
Revolutions per minute	202.	200.
Average indicated horsepower		
High-pressure cylinder	145.84	206.95
Low-pressure cylinder	130.79	178.89
Total	276.13	385.84
Approximate load	⅓	Full
Water as fed, per i.hp. per hour, pounds	21.14	20.03
Net dry steam per i.hp. per hour, pounds	18.13	17.81

TYPES AND SELECTION OF ENGINES

There are many points to be considered in the selection of the prime mover. The most economical engine is the one which will develop a brake horsepower-hour for the lowest cost. The cost is made up of several items, each of which has a direct bearing on the subject and are as follows : The fixed charges (interest, depreciation, taxes and insurance, the sum of which is usually assumed as about 15% of the initial cost), attendance, and supplies (oil and waste), cost of fuel and water. It is evident from the foregoing that the economy, steam or fuel per i.hp.-hour, may not under certain conditions be the determining factor where all things are taken into account, as, for example, the character of the load and opportunity to use the exhaust steam for heating or process work.

The plant as a whole, including generators, boilers and auxiliaries, must be considered to make a true comparison, as the more economical engine requires less boiler capacity. The higher the engine speed the less is the cost of generators for direct connected units. (See the Chapter on "Cost of Steam and Gas Power Equipment.")

When exhaust steam may be utilized for heating and drying purposes an engine giving high

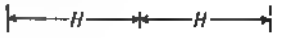

FIG. 26.

economy is undesirable when the amount of exhaust that may be utilized is in excess of the amount furnished by the more economical engine or turbine.

The following are the principal types of engines offered by various builders in this country:

High-speed Automatic Single-valve Simple Engines. High-speed automatic simple engines are obtainable in standard units from 25 kw. operating at a speed of 300 to 400 r.p.m. to 300 kw.

at 150 to 200 r.p.m. These engines are enclosed, self-oiling and equipped with balanced valve and shaft governor, which regulates the speed within 1½% from no load to full load. They are built in both vertical or horizontal types. Having the fewest parts of any type, they require

TABLE 14

DIMENSIONS AMERICAN-BALL SIMPLE ENGINES FOR DIRECT-CONNECTED SERVICE (Fig. 26)

Hp.	Kw.	Cylinder Diameter and Stroke	Revolutions per Minute	General Dimensions in Inches											Shipping Weight in Pounds	
				Floor Space		Wheel		C	D	E	F	H	Steam and Exhaust Pipes		Direct Conn. Engine	Eng. and Dyn.
				Length	Width	Dia. A	W't B						Steam	Exh't		
40	25	8½ x 8 10 x 8 9 x 10	350 to 400	84 85½	81¼	48	9	13	27½	60 61½	29½	20¾	2½ 3 3½	3½ 3½ 4	5450	8500
60	35	10 x 10 11 x 10 12 x 10	300 to 325	100⅛ 102½	86½	54	11	14½	33¼	73⅛ 75⅛	30½	24⅞	3½ 4 4	4 4½ 4½	8150	11700
80	50	11 x 11 12 x 11 13 x 11	275 to 300	110⅝ 111⅝	94⅝	66	13	16	34⅝	77⅝ 78⅝	35½	27½	4 4 4	4½ 4½ 5	10300	14700
120	75	13 x 12 14 x 12 15 x 12	260 to 290	121½ 124	109⅛	72	15	18	39	85½ 88	38½	28½	4½ 4½ 5	5 5 6	14100	20600
160	100	14 x 14 15 x 14 16 x 14	240 to 260	139	114¾	78	17	20½	43¼	100½	42½	33	5 5 6	6 6 7	18150	26600
200	125	16 x 16 17 x 16 18 x 16	220 to 240	151½	125¼	84	19	21½	46¼	109½	45	36⅝	6 6 6	7 8 8	21450	32050
250	150	17 x 16 18 x 16 18 x 16 20 x 16	210 to 230	152⅝	132¾	84	19	23¼	48	110⅝	45	42	6 6 7	8 9 10	25450	38450
325	200	24 x 18	190 to 210	180½	147	90	23	26	54	135½	48	51	8	10	36100	54000

TABLE 15

DIMENSIONS B. F. STURTEVANT CO. SIMPLE ENGINES FOR DIRECT-CONNECTED SERVICE (Fig. 27)

Size of Engine	Steam Pressure Required, Pounds	Revolutions per Minute	Pipes		Crank Pin Dia. x Length	Shaft, Dia.	Kw.	Number 16 c.p. 55 Watt Lamps*	Weight Complete Set, Pounds
			Steam	Exhaust					
8 x 8	80	375	2½	3	4 x 2¾	3 15/16	20	365	5,000
15 x 8	40	250	3	3½	4 x 2¾	3 15/16	20	365	6,000
15 x 10	35	250	3	3½	4½ x 3¼	4½	20	365	8,600
8 x 10	120	350	2½	3	4½ x 3¼	4½	30	550	8,000
10 x 10	80	350	3½	4	4½ x 3¼	4½	30	550	8,300
10 x 10	120	300	3	3½	4½ x 3¼	4½	40	730	9,200
11 x 10	80	300	3½	4	4½ x 3¼	4½	40	730	9,400
10 x 12	120	275	3	3½	5 x 3¾	5	50	910	14,250
13 x 12	80	275	4	4½	5 x 3¾	5	50	910	15,000
12 x 12	120	275	4	4½	5 x 3¾	5	60	1,100	14,750
14 x 12	80	275	5	6	5 x 3¾	5	60	1,100	15,200
12 x 14	120	275	4	5	6 x 4½	6	75	1,365	19,300
14 x 14	80	275	5	6	6 x 4½	6	75	1,365	19,800
14 x 14	120	250	5	6	6 x 4½	6	100	1,820	24,000
16 x 14	80	250	5	6	6 x 4½	6	100	1,820	24,000
14 x 16	125	250	5	6	7 x 5½	7	125	2,275	30,500
16 x 16	100	250	6	7	7 x 5½	7	125	2,275	30,750
16 x 16	125	250	6	7	7 x 5½	7	150	2,730	33,500
18 x 16	100	250	6	7	7 x 5½	7	150	2,730	33,700

* Carbon filament type lamps. Approximately the same number of 60 watt tungsten lamps rated at horizontal candle power may be supplied.

a minimum of attention, require the least floor space and are the least expensive to install. They are, however, the most uneconomical type in so far as the fuel consumption is concerned.

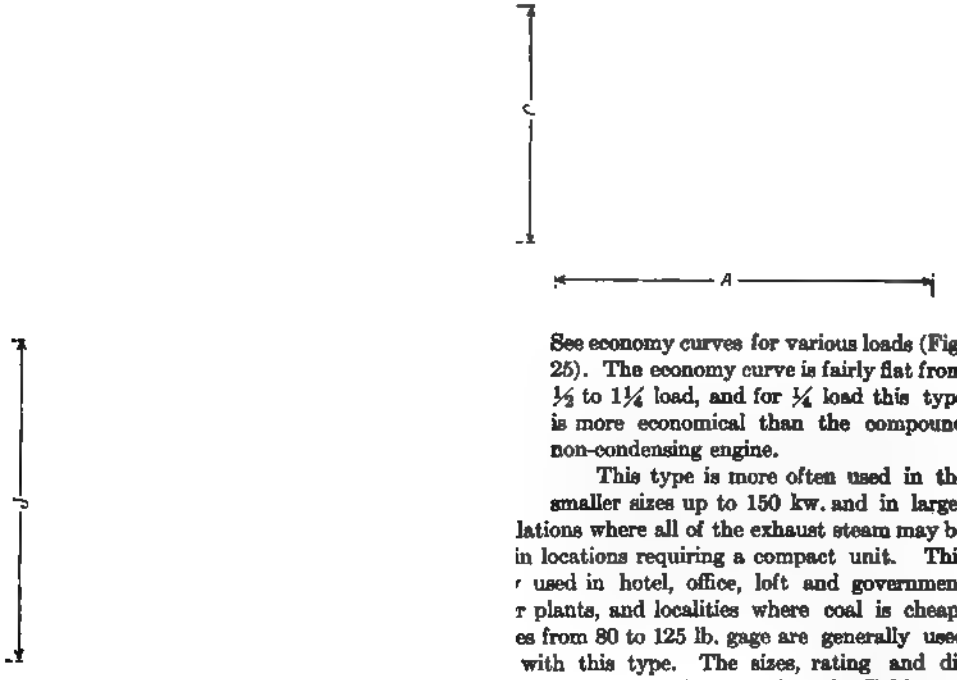

FIG. 27. SIMPLE HIGH-SPEED ENGINES. (*B. F. Sturtevant Co.*).

See economy curves for various loads (Fig. 25). The economy curve is fairly flat from ½ to 1¼ load, and for ¼ load this type is more economical than the compound non-condensing engine.

This type is more often used in the smaller sizes up to 150 kw. and in larger lations where all of the exhaust steam may be in locations requiring a compact unit. This r used in hotel, office, loft and government r plants, and localities where coal is cheap. es from 80 to 125 lb. gage are generally used with this type. The sizes, rating and di- this type of engine are given by Tables 13, 14 and 15, which may be used in making preliminary layouts, etc.

TABLE 16

DIMENSIONS OF SIMPLE HIGH-SPEED ENGINES (See Fig. 27)

(*B. F. Sturtevant Co.*)

All generators are eight-pole.

NOTE.—The above dimensions are for convenience in making preliminary layouts of installations.

SMALL STEAM ENGINE

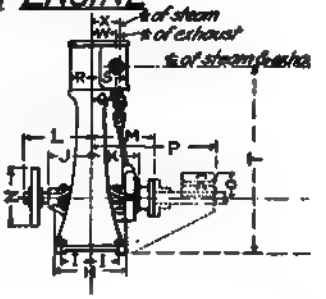

Dimensions - in Inches - for Blower Attachment

Size	A	B	C	E	G	H	L	M	N	O	P	R	S	T	Shaft	Crank Pin	Cross-head Pin	Steam	Ex-haust
3¼x3	22⅝	8½	16⅝	17	6½	11	10	10	9	4½	19⅜	3⅛	5⅝	27⅜	1⅞	1¹³/₁₆ x 1¾	1⅝ x 1⅝	1	1¼
4 x 4	30½	11	20⅜	19	7⅝	13	11⅝	11⅝	13	5½	21⅝	3⅛	6½	36⅜	1⅞	2⅛ x 2½	1⅝ x 1½	1¼	1½
4¾x4	20⅝	11	20⅜	19	7⅝	13	11⅝	11⅝	13	5½	21⅝	3⅛	7⅛	[illegible]	1⅞	2⅛ x 2½	1⅝ x 1½	1¼	1½
5 x 5	36½	13¾	23⅜	23	9⅜	15	14	14	14½	[illegible]	24⅛	4⅛	8½	43½	2⅜	2⅞ x 3	1⅝ x 1⅞	1½	2
6 x 5	35½	13¾	23⅞	23	9⅜	15	14	14	14½	6	24⅛	4⅛	8⅝	40⅜	2⅜	2⅞ x 3	1⅝ x 1⅞	1½	2
6 x 6	42	16½	27⅜	[illegible]	11⅝	17½	15	16	14½	7¼	29	5⅜	9⅜	50⅝	2⅜	2¹³/₁₆ x 3½	1¹³/₁₆ x 2¼	1½	2
7½x6	41⅜	16½	27⅜	26	11⅝	17½	15	16	14½	7¼	29	5⅜	9⅜	50⅝	2⅜	2¹³/₁₆ x 3½	1¹³/₁₆ x 2¼	2	2½
7 x 7	47⅜	19	31⅜	30	13	19	18	18	9	7⅞	34	6½	10	58½	2⅝	3⅛ x 4	1⅞ x 2⅝	2	2½
9 x 7	47½	19	31⅜	30	14	19	18	18	9	7⅞	34	7	11⅛	58½	2⅝	3⅛ x 4	1⅞ x 2⅝	2½	[illegible]
9 x 8	52	21½	36⅜	34	15	22	18½	20½	9	8	39/51	7½	13	65½	3⅞	3⅝ x 4⅜	2⅞ x 3½	3	3½
11 x 8	52	21½	36⅜	34	15	22	18½	20½	9	8	39/51	7½	15⅝	65½	3⅞	3⅝ x 4⅜	2⅞ x 3½	3½	5

Table of Horse Powers - Type A - High Pressure.

Size of Engine	Steam Pres.	Revolutions per Minute 250	275	300	325	350	375	400	425	450	475	500	550	600	700	800
Steam Pressure not over 150 lbs.																
3½x3	80	1.25	1.38	1.5	1.62	1.75	1.88	2.0	2.13	2.25	2.38	2.5	2.75	3.0	3.5	4.0
	100	1.56	1.72	1.87	2.03	2.19	2.35	2.5	2.66	2.81	2.97	3.12	3.44	3.75	4.38	5.0
4x4	80	2.55	2.8	3.05	3.3	3.55	3.8	4.05	4.3	4.6	4.85	5.1	5.6	6.65	7.75	
	100	3.15	3.45	3.8	4.1	4.45	4.75	5.05	5.4	5.7	6.01	6.35	7.0	7.6	8.9	
5x5	80	4.95	5.45	5.95	6.45	6.95	7.45	7.95	8.45	8.95	9.44	9.9	10.9	11.9		
	100	6.2	6.85	7.45	8.1	8.7	9.35	9.95	10.6	11.2	11.8	12.45	13.7	14.9		
6x6	80	8.55	9.45	10.27	11.15	12.0	12.85	13.7	14.5	15.4	16.2	17.15				
	100	10.7	11.75	12.84	13.95	15.0	16.05	17.15	18.2	19.25	20.3	21.4				
7x7	80	13.6	15.0	16.35	17.75	19.1	20.4	21.85	23.2	24.5						
	100	17.0	18.7	20.4	22.15	23.8	25.5	27.2	29.0	30.7						
9x8	80	25.8	28.4	31.0	33.5	36.2	38.8	41.3	44.0							
	100	32.2	35.4	38.6	41.8	45.0	48.2	51.4	54.8							

The heavy black lines indicate the slowest speed at which the automatic type will regulate. If engines are to operate at lower speeds, throttling governors must be used.

FIG. 28.

Compound High-speed Automatic Engines. This class of engine is obtainable in the following types: tandem cross and angle compound. The compound engine is well adapted for

TABLE 19

COMPOUND HIGH-SPEED ENGINES

Non-Condensing

Size of Engine	Max. Rat.	Wheels		Dia. of Pipes		Floor Space				Kilowatt Capacity of Dynamo
						Belted		Direct Conn.		
		Dia. In.	Belt Pulley Width In.	St'm In.	Ex. In.	Length Ft. In.	Width Ft. In.	Length Ft. In.	Width Ft. In.	
7 — 8 and 13 x 12	70	54	11	3	6	11 8	5 1	11 8	7 6	35— 40
7 — 8 and 13 x 12	80	54	11	3	6	11 8	5 1	11 9	7 7	40— 50
9 —10½ and 16 x 12	100	60	13	3½	7	13 1	5 4	13 7	8 7	50— 60
9 —10½ and 16 x 12	135	60	13	3½	7	13 1	5 5	13 8	8 9	75
10½—12 and 18 x 12	135	60	13	4	7	13 1	5 5	13 8	8 9	75
9 —10½ and 16 x 15	100	60	13	3½	7	13 2	5 4	13 7	8 8	50— 60
9 —10½ and 16 x 15	135	60	13	3½	7	13 2	5 5	13 8	8 9	60— 75
10½—12 and 18 x 15	135	60	13	4	7	13 2	5 5	13 8	8 9	75
10½—12 and 18 x 16	180	66	15	4	7	15 3	6 11	15 10	10 7	100
11 —12½ and 19 x 16	180	66	15	4½	8	15 3	6 11	15 10	10 7	100
12 —13½ and 20½ x 16	200	66	15	5	9	15 4	6 11	15 11	10 8	100—125
13 —14½ and 22 x 16	260	78	19	5	10	16 7	7 7	17 10	11 6	125—150
10½—12 and 18 x 18	180	72	16½	4	7	12 6	7 1	15 10	10 7	100
11 —12½ and 19 x 18	180	72	16½	4½	8	12 6	7 1	15 10	10 7	100
12 —13½ and 20½ x 18	200	72	16½	5	9	12 7	7 1	15 11	10 8	100—125
13 —14½ and 22 x 18	280	78	19	5	10	16 7	7 9	17 10	11 8	150
13½—15 and 23 x 18	280	78	19	5	10	16 7	7 9	17 10	11 8	150
14 —15½ and 24 x 18	300	84	21	6	10	18	8 7	19 8	13	175—200
15 —16½ and 25 x 18	350	84	23	6	12	18 1	8 7	19 9	13	200
14 —15½ and 24 x 20	300	84	21	6	10	18 1	8 9	19 9	13 2	175—200
15 —16½ and 25 x 20	350	84	23	6	12	18 2	8 9	19 10	13 2	200

Condensing

Size of Engine	Max. Rat.	Wheels		Dia. of Pipes		Floor Space				Kilowat Capacity of Dynamo
						Boiled		Direct Conn.		
		Dia. In.	Belt Pulley Width In.	St'm In.	Ex. In.	Length Ft. In.	Width Ft. In.	Length Ft. In.	Width Ft. In.	
7 — 8 and 14 x 12	70	54	11	3	6	11 8	5 1	11 8	7 6	35— 40
7 — 8 and 14 x 12	80	54	11	3	6	11 8	5 1	11 9	7 7	40— 50
8 — 9½ and 16 x 12	100	60	13	3½	7	13 1	5 4	13 7	8 7	50— 60
8 — 9½ and 16 x 12	135	60	13	3½	7	13 1	5 5	13 8	8 9	75
9 —10½ and 18 x 12	135	60	13	4	7	13 1	5 5	13 8	8 9	75
8 — 9½ and 16 x 15	100	60	13	3½	7	13 2	5 4	13 7	8 8	50— 60
8 — 9½ and 16 x 15	135	60	13	3½	7	13 2	5 5	13 8	8 9	60— 75
9 —10½ and 18 x 15	135	60	13	4	7	13 2	5 5	13 8	8 9	75
9 —10½ and 18 x 16	18/	66	15	4	7	15 3	6 11	15 10	10 7	100
9½—11 and 19 x 16	180	66	15	4½	8	15 3	6 11	15 10	10 7	100
10½—12 and 20½ x 16	200	66	15	5	9	15 4	6 11	15 11	10 8	100—125
11½—13 and 22 x 16	260	78	19	5	10	16 7	7 7	17 10	11 6	125—150
9 —10½ and 18 x 18	180	72	16½	4	7	12 6	7 1	15 10	10 7	100
9½—11 and 19 x 18	180	72	16½	4½	8	12 6	7 1	15 10	10 7	100
10½—12 and 20½ x 18	200	72	16½	5	9	12 7	7 1	15 11	10 8	100—125
11½—13 and 22 x 18	280	78	19	5	10	16 7	7 9	17 10	11 8	150
11½—13 and 23 x 18	280	78	19	5	10	16 7	7 9	17 10	11 8	150
12½—14 and 24 x 18	300	84	21	6	10	18	8 7	19 8	13	175—200
13 —14½ and 25 x 18	300	84	21	6	10	18 1	8 9	19 9	13 2	175—200
12½—14 and 24 x 20	350	84	23	6	12	18 1	8 7	19 9	13	200
13 —14½ and 25 x 20	350	84	23	6	12	18 2	8 9	19 10	13 2	200

most installations in localities where coal is high priced and particularly when the exhaust from a simple engine could not all be used advantageously. The rotative speeds are the same as for

simple high-speed engines. The steam pressure used is 120 to 150 lb. gage. A compound engine is ordinarily used for units of not less than 150 kw. capacity. They are built both with single and four valves. The regulation is about the same as for the high-speed simple type.

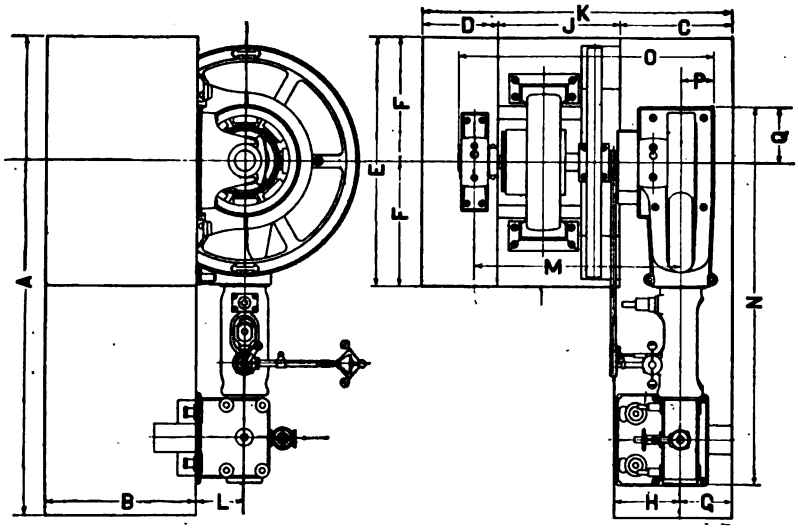

FIG. 30. HEAVY DUTY DIRECT-CONNECTED CORLISS ENGINES.

TABLE 20

DIMENSIONS OF SIMPLE DIRECT-CONNECTED CORLISS ENGINES

SIZE		LIST OF GENERAL FOUNDATION DIMENSIONS																
Diameter	Stroke	A	B	C	D	E	F	G	H	J	K	L	M	N	O	P	Q	
In.	In.	Ft. In.	Ft. In.	F. I.	F. I.	Ft. In.	F. I.	F. I.	F. I.	F. I.	Ft. In.	Ft. In.	Ft. In.	Ft. In.	Ft. In.	Ft. In.	Ft. In.	
12	36	23 0	5 8	6 0	4 0	10 0	5 0	2 9	3 3	4 6	14 8	2 1	8 0	18 9	10 3	1 7	2 6	
14	36	23 0	5 8	6 0	4 0	10 0	5 0	2 9	3 3	4 6	14 6	2 1	8 2	18 10	10 6	1 7	2 6	
16	36	25 0	6 6	6 0	4 0	13 0	6 6	2 9	3 3	4 9	15 1	2 6	8 9	19 7	11 3	1 9	2 11	
18	36	25 0	7 0	6 6	5 0	13 0	6 6	3 0	3 6	5 0	16 7	2 6	9 4	19 9	12 0	1 9	2 11	
20	36	25 6	7 0	6 6	5 0	13 0	6 6	3 0	3 6	5 3	16 10	2 6	10 7	20 4	12 5	1 9	2 11	
20	42	28 0	7 0	6 6	5 0	13 0	6 6	3 0	3 6	5 6	17 0	2 8	10 0	22 9	12 9	2 1	3 8	
22	42	28 6	8 0	7 0	5 0	14 0	7 0	3 3	3 9	5 6	17 6	2 8	10 2	23 2	13 2	2 1	3 8	
24	42	30 3	8 6	7 6	5 0	16 0	8 0	3 6	4 0	6 0	18 6	2 10	10 8	23 11	13 6	2 5	4 0	
24	48	32 6	8 6	7 6	5 0	16 0	8 0	3 6	4 0	6 6	19 0	2 10	11 2	26 2	14 6	2 5	4 0	
26	48	32 6	9 0	8 0	5 0	16 0	8 0	4 0	4 0	7 0	20 0	2 10	12 0	26 2	15 0	2 5	4 0	
28	48	33 6	9 6	9 0	5 0	16 0	8 0	4 6	4 6	7 6	21 0	3 0	12 8	26 9	16 0	2 8	4 3	
30	48	34 6	10 0	9 0	5 6	18 0	9 0	4 6	4 6	8 0	22 6	3 0	13 8	27 0	18 0	2 8	4 3	
32	48	35 0	10 4	9 6	5 6	18 0	9 0	4 6	5 0	8 6	23 6	3 2	14 8	28 4	19 0	2 11	5 2	

The tandem, cylinders placed end to end and one crank pin, is only built for stationary work as a horizontal machine. The cross compound, in which the cylinders are arranged side by side, is built both as a vertical and horizontal engine. The engine has two cranks at right angles to one another, placed on either end of the shaft, the flywheel and generator being placed on the shaft between the cranks.

TABLE 21

STANDARD CORLISS ENGINE—TABLE OF SIZES AND POWER RATINGS

Dimensions of Cylinder		Band Wheels			Horsepower 80 Pounds Initial Pressure ¼ Cut-off		Horsepower 90 Pounds Initial Pressure ¼ Cut-off		Horsepower 100 Pounds Initial Pressure ¼ Cut-off		Size of Quadrangle Within Which Engine Including Flywheel Will Stand		Length of Crank-shaft from Outside of Main Bearings	Distance from Center of Crank-shaft to End of Cylinder	Height from Base-plate to Center of Crank-shaft	Horse-power Constant
Bore in Inches	Stroke in Inches	Diam. in Feet	Face in Inches	Weight in Pounds	Revs. per Minute	Horse-power	Revs. per Minute	Horse-power	Revs. per Minute	Horse-power	Length Ft. In.	Width Ft. In.	Ft. In.	Ft. In.	Ft. In.	
10	24	6	12	4000	125	50	125	55	125	62	13 1	5 11	5 2 1/16	10 1	1 11	0.0094
12	24	7	14	5000	125	75	125	84	125	93	14 11	6 9	5 3	10 11	1 11	.0187
12	30	8	14	6000	120	85	120	94	120	104	16 11	6 9	5 2 13/16	12 11	1 11	.0171
14	30	8	18	7000	120	115	120	126	120	137	17 7	7 7	5 10 1/4	13 1	2 1	.0230
14	36	9	18	8000	110	126	110	143	110	160	19 7	7 7	5 10 7/8	15 1	2 1	.0276
16	30	10	20	9000	120	151	120	170	120	190	18 5	8 8	6 6	15 5	2 3	.0301
16	36	10	24	10000	110	166	110	190	110	213	20 5	8 8	6 6	15 5	2 3	.0361
16	42	12	24	10600	100	177	100	200	100	226	22 5	8 8	6 6	17 5	2 3	.0421
18	36	12	26	12000	110	210	110	240	110	270	21 6	9 5	8 3 1/16	15 6	2 5	.0457
18	42	14	28	14000	100	223	100	255	100	287	24 6	9 5	8 3 1/16	17 6	2 5	.0533
20	36	12	28	14000	110	236	110	270	110	305	22 11	10 8	8 3 1/2	15 11	2 6	.0564
20	42	14	30	17000	100	275	100	315	100	355	24 11	10 8	8 3 1/2	17 11	2 6	.0658
20	48	16	34	19000	90	284	90	325	90	365	27 11	10 8	8 3 1/2	19 11	2 6	.0753
22	42	16	36	21000	100	334	100	382	100	422	26 2	11 1	10 3	18 2	2 9	.0797
22	48	16	38	23000	90	344	90	393	90	442	28 2	11 1	10 3	20 2	2 9	.0911
22	54	16	40	25000	80	344	80	395	80	442	30 2	11 1	10 3	22 2	2 9	.1024
24	42	16	40	22000	100	398	100	454	100	510	28 8	12 0	11 3	20 8	2 11	.0948
24	48	16	40	24000	90	408	90	468	90	527	30 8	12 0	11 3	22 8	2 11	.1084
24	54	16	44	26000	80	410	80	468	80	526	32 8	12 0	11 3	24 8	2 11	.1219
26	48	16	44	30000	90	480	90	543	90	617				21 5	2 9	.1272
26	54	18	46	32000	80	480	80	549	80	618				23 5	2 9	.1431
26	60	18	48	34000	75	501	75	572	75	644				25 5	2 9	.1591
28	48	18	48	32000	90	563	90	645	90	726				21 9	2 10	.1477
28	54	18	52	34000	80	563	80	645	80	727				23 9	2 10	.1662
28	60	18	54	36000	75	587	75	672	75	757				25 9	2 10	.1846
30	48	18	56	34000	90	646	90	739	90	833				22 2	2 10	.1694
30	54	18	60	38000	80	645	80	740	80	834		Shafts as desired		24 2	2 10	.1906
30	60	18	64	40000	75	673	75	771	75	868				26 2	2 10	.2118
32	48	18	58	36000	90	735	90	841	90	948				22 7	2 10	.1923
32	54	20	62	39000	80	734	80	841	80	947				24 7	2 10	.2166
32	60	20	66	43000	75	766	75	877	75	988				26 7	2 10	.2410
34	54	20	78	60000	80	840	80	961	80	1083				24 11	2 11	.2477
34	60	20	78	60000	75	865	75	990	75	1115				26 11	2 11	.2720

HORSEPOWER.—In the computation of the power of an engine, the prime factors are area of cylinder, pressure of steam, piston speed and point of cut off. Calculations of horsepower, as indicated in the above table, are based upon an initial steam pressure of 80, 90 and 100 pounds, cutting off at ¼ stroke, piston speed varying from 500 feet for the smallest up to 750 for the largest size. These conditions can be changed to suit requirements, the power of an engine is increased in like proportion. I.hp. = m.e.p. × r.p.m. × constant from table.

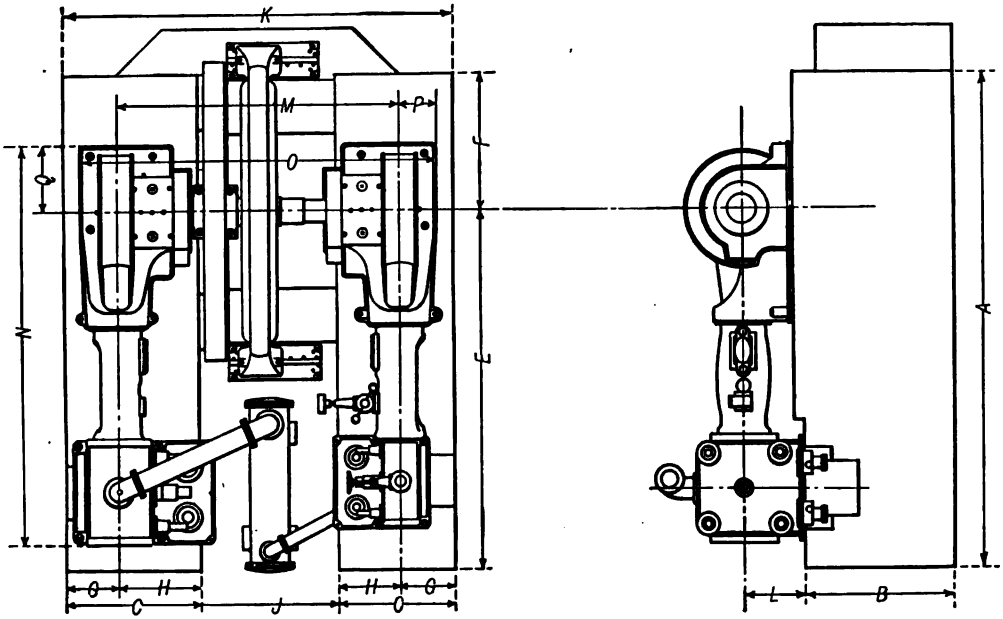

FIG. 31. HEAVY DUTY CROSS-COMPOUND DIRECT-CONNECTED CORLISS ENGINES.

TABLE 22

DIMENSIONS OF HEAVY DUTY CROSS-COMPOUND DIRECT-CONNECTED CORLISS ENGINES

SIZE			LIST OF GENERAL FOUNDATION DIMENSIONS																																	
Dia. H. P.	Dia. L. P.	Stroke	A		B		C		E		F		G		H		J		K		L		M		N		O		P		Q	
In.	In.	In.	F.	I.	F.	I.	F.	I.	F.	I.	F.	I.	F.	I.	F.	I.	F.	I.	F.	I.	F.	I.	F.	I.	F.	I.	F.	I.	F.	I.	F.	I.	F.	I.	F.	I.
12	24	30	22	0	6	0	6	6	17	6	5	0	8	0	3	6	6	6	19	0	2	1½	13	0	18	3	15	7	1	7	2	6				
12	24	36	23	0	6	0	6	6	18	0	5	0	8	0	3	6	7	0	19	6	2	1½	13	6	18	9	16	8	1	7	2	6				
14	28	30	24	6	6	0	6	6	18	6	6	0	8	0	3	6	6	6	19	0	2	1½	13	0	18	4	15	8	1	7	2	6				
14	28	36	25	0	6	6	6	6	19	0	6	0	8	0	3	6	7	0	19	6	2	1½	13	6	18	10	16	8	1	7	2	6				
16	32	36	26	6	6	6	6	6	20	0	6	6	8	0	3	6	7	6	20	0	2	6½	14	0	19	7	17	0	1	9	2	11				
16	32	42	27	6	6	6	6	6	21	0	6	6	8	0	3	6	8	0	20	6	2	6½	14	6	22	3	17	6	1	9	2	11				
18	36	36	27	0	7	0	7	0	20	0	7	0	8	3	3	9	7	6	20	6	2	6½	14	6	19	9	17	5	1	9	2	11				
18	36	42	28	6	7	0	7	0	21	6	7	0	8	3	3	9	8	0	21	6	2	6½	15	0	22	6	16	0	1	9	2	11				
18	36	48	30	0	7	0	7	0	23	0	7	0	8	3	3	9	8	9	22	3	2	6½	15	9	25	3	18	7	1	9	2	11				
20	40	36	26	6	7	6	7	6	19	6	7	0	8	6	4	0	8	0	22	6	2	8½	16	5	20	0	19	6	2	13	3					
20	40	42	29	0	7	6	7	6	22	0	7	0	8	6	4	0	8	6	23	0	2	8½	16	0	22	6	19	10	2	13	3					
20	40	48	31	0	7	6	7	6	24	0	7	0	8	6	4	0	9	3	23	9	2	8½	16	9	25	0	20	5	2	13	3					
22	44	36	27	6	8	0	7	9	19	6	8	0	8	7½	4	1½	8	6	23	6	2	8½	16	3	20	9	19	10	2	13	3					
22	44	42	30	0	8	0	7	9	22	0	8	0	8	7½	4	1½	9	3	24	3	2	8½	17	0	23	3	21	2	2	13	3					
22	44	48	32	6	8	0	7	9	24	6	8	0	8	7½	4	1½	10	0	25	0	2	8½	17	9	25	8	21	4	2	13	3					
24	48	42	30	6	9	0	8	0	22	6	8	0	8	9	4	3	9	8	25	2	2	10½	17	8	24	6	22	8	2	5	4	0				
24	48	48	33	0	9	0	8	0	25	0	8	0	8	9	4	3	10	6	26	0	2	10½	18	6	27	0	23	0	2	5	4	0				
26	52	42	30	6	9	0	8	6	22	6	8	0	4	0	4	6	10	4	26	10	2	10½	18	10	24	8	23	8	2	5	4	0				
26	52	48	33	0	9	0	8	6	25	0	8	0	4	0	4	6	11	0	27	6	2	10½	19	6	27	2	24	4	2	5	4	0				
26	52	60	38	0	9	0	8	6	30	0	8	0	4	0	4	6	11	6	28	0	2	10½	19	6	32	2	24	10	2	5	4	0				
28	56	48	34	6	10	0	9	6	26	6	8	0	4	6	5	0	11	0	29	6	3	0½	20	6	27	6	25	10	2	8	4	3				
28	56	60	39	0	10	0	9	6	31	0	8	0	4	6	5	0	11	6	30	0	3	0½	21	0	32	6	26	4	2	8	4	3				
30	60	48	35	0	10	0	10	0	26	0	9	0	4	9	5	3	11	0	30	6	3	0½	21	0	27	9	26	4	2	8	4	3				
30	60	60	40	0	10	0	10	0	31	0	9	0	4	9	5	3	12	6	31	6	3	0½	22	0	32	9	27	4	2	8	4	3				
32	64	60	41	0	10	0	10	6	32	0	9	0	5	0	5	6	12	6	33	0	3	0½	23	0	33	0	28	10	2	8	4	3				
34	68	60	43	0	12	0	11	0	33	0	10	0	5	3	5	9	13	4	34	10	3	2	24	4	33	3	29	12	11	5	2					
36	72	60	44	0	12	0	11	6	34	0	10	0	5	6	6	0	14	0	36	6	3	4	25	6	33	6	29	6	3	2	5	6				

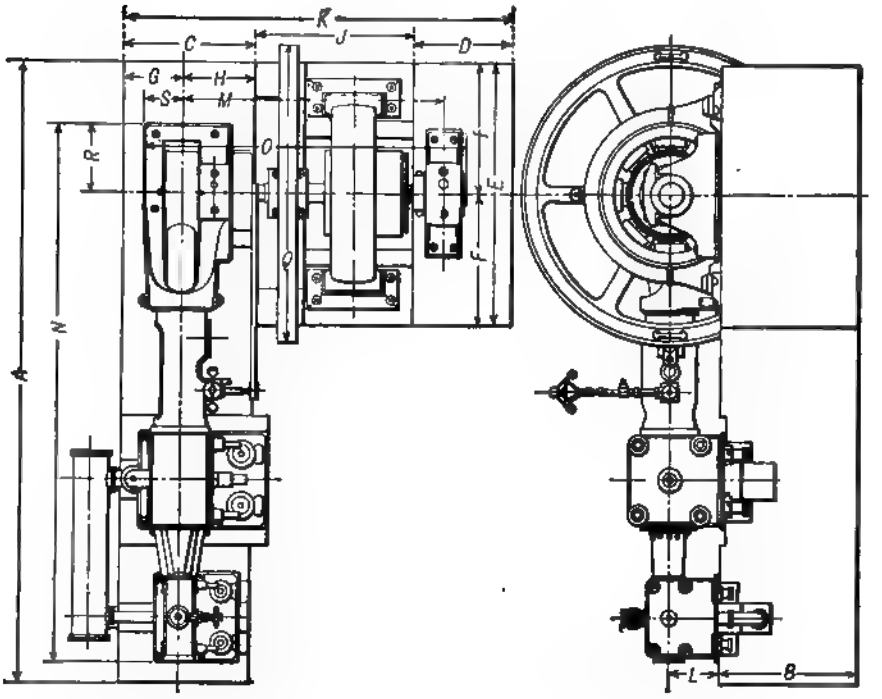

FIG. 32. HEAVY DUTY TANDEM-COMPOUND DIRECT-CONNECTED CORLISS ENGINES.

TABLE 23

HEAVY DUTY TANDEM-COMPOUND DIRECT-CONNECTED CORLISS ENGINES

The angle compound (Fig. 29) has a horizontal high-pressure cylinder and a vertical low-pressure cylinder. This engine has only one crankpin.

The tandem occupies less space, weighs less, and is, therefore, the cheapest of the compound group. For these reasons it is perhaps more often installed than the cross compound.

The angle compound occupies the least floor space and is used principally for isloated plants in hotels and office buildings where the floor space is very limited.

Compound engines when operated condensing are 15 to 20 per cent more economical than the same type operating non-condensing. Condensing units are not ordinarily installed unless the load is above 1000 hp. and the cost of coal is $2.00 per ton or over, as the fixed charges on the plant as a whole do not generally warrant the extra expense.

Corliss Slow-speed Type. The Corliss slow or medium-speed engine is equipped with the releasing type of valve gear, which limits the speed to a maximum of about 120 r.p.m. The engine, on account of its slow speed, is massive and requires a comparatively large amount of floor space and is highest in first cost. The depreciation is less than the high-speed types, and it will undoubtedly maintain its original economy for a longer period than any of the previous types described.

Until the advent and perfection of the steam turbine the Corliss slow-speed engine represented the highest standard of perfection reached by the engine builder in this country. It was chosen to the practical exclusion of all other types for central station installations. For rope driving and belted service in mills and factories it is still a favorite type. For direct-connected units this type is not ordinarily chosen for units of less capacity than about 500 to 750 kw., at which point the rotative speed and cost of generators is the same as the four-valve non-releasing type, the generators being the same size. Approximate dimensions for standard Corliss engines are given in Tables 20 to 23.

The Unaflow Engine.—The latest development in the reciprocating engine field is known as the Unaflow (or Uniflow) engine. The economy curve of this type of engine is remarkably flat; for this reason it is particularly well adapted to handle fluctuating loads.

The unaflow principle has for its object the elimination of *initial condensation*, one of the greatest losses in reciprocating steam engines.

With the unaflow engine, the steam enters the cylinder at the ends, after passing through steam-jacketed heads; and, after cut off and expansion have taken place, the steam is exhausted through ports arranged around the center of the cylinder, which are uncovered by the piston at the end of the stroke. The steam has, consequently, a flow in but one direction—hence the derivation of the phrase "uni-directional flow." (Figs. 33 and 37.)

In the counterflow engine, the steam returns on its path at the end of the stroke, and is exhausted at the same end of the cylinder at which it entered. By this method, the cold expanded steam of considerable volume washes the cylinder walls and head during 50 to 75 per cent of the return stroke, thereby cooling them to such an extent that the boiler steam, when it is again admitted, is cooled or condensed by coming in contact with the head and clearance spaces of the cylinder which have just been cooled by the expanded exhaust steam.

It is this cooling effect that causes what is termed "initial condensation," which is very much reduced in the unaflow engine, where the ends are kept hot and the center or exhaust belt cool.

It was to remedy this fundamental defect of the counterflow engine that successive expansion stages were resorted to, as in compound or triple-expansion engines. Superheating has also been employed to overcome the above-mentioned difficulty; but superheating cannot be effected without some cost in installation and operation, and much of the apparent gain in the engine due to superheating is counteracted by the decreased boiler efficiency.

Therefore, by avoiding the cooling of all clearance surfaces, in the design of the cylinder itself, it is possible to obtain in a single cylinder as many expansions, with a good or better economy, as can be obtained in a compound or triple-expansion engine, embodying the practical feature of a much simpler valve gear, less cylinder and gear lubrication and a higher mechanical efficiency.

In Europe, the majority steam plants operate condensing; and compression begins as soon as the piston covers the central exhaust ports on its return stroke. Compression takes place, therefore, during 90 per cent of the stroke, which, even with small clearances, does not cause it to rise above the initial pressure so long as the engine is operated condensing, with a fairly good vacuum, as shown in the condensing indicator diagram.

If the engine should be operated non-condensing, however, the compression, starting almost at the beginning of the return stroke, and with atmospheric pressure instead of vacuum in the cylinder, would become so excessive as to be detrimental to the engine, unless large clearances

FIG. 33. SKINNER UNAFLOW ENGINE CYLINDER.

were employed. The same excessive and dangerous compression would be the result if the vacuum should fail on a condensing unaflow engine.

To prevent this rise in compression, if the vacuum should for any reason fail, the European builders resort to either using snifting or relief valves, or providing large clearance pockets in both cylinder heads, controlled by hand-operated or spring-backed relief valves, which relieve the cylinder of excessive compression by forcing some of the compressed steam into the clearance pockets.

In America, where fully 90 per cent of the steam engines installed operate non-condensing, it was found that the European unaflow engine would have to be considerably modified.

The *Skinner Engine Co.* have adopted the expedient of delaying the compression by placing auxiliary exhaust valves at that point in the unaflow cylinder where it is usual to start compression in a non-condensing counterflow engine.

These valves come automatically into action as soon as the pressure in the exhaust pipe exceeds a predetermined limit.

The cut (Fig. 34) shows the construction of the auxiliary exhaust valve gear and automatic disengaging device, of the *Skinner* engine.

A is the shaft supporting idler *B*, which is operated by shear cam *C*. This cam is operated by the engine valve gear, which is connected to shaft *D* on the outside of the cam box.

When the cam *C* raises the idler *B*, the latter raises the single-beat exhaust valve, the stem of which projects within a short distance of the idler *B*. The spring around the valve stem has only enough tension to insure quick closing when operating at high speeds. The shear cam is so designed that there is practically no sliding action on the idler. Both cam and idler are of steel, and are immersed in oil.

Fig. 35 shows a reproduction of an indicator card taken from the *Skinner* unaflow engine when operating non-condensing.

Fig. 36 shows the economy curve of a *Skinner* unaflow engine when operating non-condensing.

Fig. 37 shows the cylinder construction of the *Nordberg* unaflow engine. (*Nordberg Mfg. Co.*)

Fig. 38 is a reproduction of the indicator cards from the *Nordberg* engine.

Fig. 39 shows the economy curves of the *Nordberg* engine operated with saturated steam at 150-lb. initial pressure and 150 r.p.m., condensing with 26" vacuum and non-condensing with one-half-pound back pressure.

SELF-CONTAINED PLANTS

A type of self-contained power plant known as the "Locomobile" is largely used in Europe in small and medium-sized isolated plants. This machine is simply a combination of a high-grade compound engine mounted on a horizontal fire box tubular type boiler equipped with a superheater and reheater located in the smoke chamber.

The remarkable low fuel consumption is probably its most pronounced characteristic. Its mechanical simplicity, small space requirement, ease of supervision and ready access for inspection and repairs are advantages of scarcely secondary importance.

The low fuel consumption may be attributed to the high pressure used superheating and reheating of the steam between the high- and low-pressure cylinder by means of the furnace gases. This machine is now built in this country by the *Buckeye Engine Company* under the trade name of "Buckeye-mobile." The exhaust from the low-pressure cylinder is passed through a closed type of straight tube feed-water heater and thence to a condenser when operating as a condensing machine. The air, circulating, and feed pumps are belt-driven from the engine shaft.

The following tests results are reported by the *Buckeye Engine Co.:*

TABLE 24

Test	Per cent Rating	Kw.	R.P.M.	Steam Pressure	Initial Superheat	Low Pressure Superheat	Feed Water Temp.	Vacuum	Steam per I.Hp. Hour	Coal per I.Hp. Hour	Coal per Kw. Hour	Boiler and Superheater Efficiency	B.t.u. in Coal
A...	86	93.4	206	208	262	189	205	N.-C.	.....	1.856	2.99	....	14398
B...	88	95.7	198	208	192	177	204	N.-C.	12.9	1.45	2.33	74	14209
C...	97	101.4	200	209	218	178	135	25.7	9.2	1.08	1.80	76.8	14209
D...	94	98.4	201	202	297	219	140	25.8	9.6	1.35	2.26	64.8	14282
E...	94	98.5	208	206	220	131	133	25.8	10.41	1.49	2.49	68.8	12788
F....	95	99.4	206	209	247	169	131	25.6	9.8	1.16	1.94	76.9	14136
G....	114	121.5	209	208	282	178	132	24.8	9.9	1.195	1.96	76.6	14099
H...	136	146.8	208	207	278	188	138	24.8	10.2	1.195	1.98	77	14215
I....	103	.....	248	210	171	56	192	N.-C.	13.3	1.33	....	80.2	14500

N.-C.—Non-condensing atmospheric exhaust.
The capacities and dimensions of machines built by the *Buckeye Engine Co.* are given by Fig. 40.

FUEL CONSUMPTION IN POWER PLANTS

The fuel consumption in a steam power plant depends upon the calorific value of the fuel used and efficiency of the boilers and generating units.

The year-round efficiency of a boiler plant may be assumed as equal to approximately 60 per cent. An efficiency of 75 per cent and over is frequently obtained under test conditions. Assuming an average of 13,500 B.t.u. for the heat value of the coal, there is available 13,500 × 0.60 or 8100 B.t.u. per lb. of coal burned.

Assuming a boiler pressure of 105 lb. gage and 100 lb. at the engine throttle and a final temperature of the feed water 200°, the generation of one pound of steam at 105 lb. gage pressure requires 880 + (341 − 200) or 1021 B.t.u. per lb. Therefore, the generation of one

FIG. 34. VALVE GEAR OF SKINNER ENGINE.

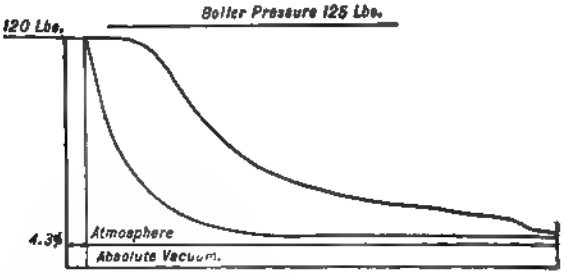

FIG. 35. INDICATOR CARD FROM SKINNER UNAFLOW ENGINE—NON-CONDENSING.

pound of steam under the conditions above stated requires a fuel consumption of 1021/8100 or 0.126 lb. The fuel consumption per indicated horsepower per hour based on the water rates given by the curves Fig. 25 at normal load and the data in the preceding paragraphs is given by the following table:

TABLE 25

STEAM AND FUEL CONSUMPTION OF NON-CONDENSING ENGINES

Type of Engine	Steam		Coal	
	I.Hp.-Hr.	Kw.-Hr.	I.Hp.-Hr.	Kw.-Hr.
Simple High-Speed Single-Valve	30	46.5	3.75	5.81
Simple High-Speed Four-Valve	25	38.7	3.13	4.85
Compound High-Speed Single-Valve	25	38.7	3.13	4.85
Compound High-Speed Four-Valve	24	37.2	3.00	4.65

To the above figures should be added approximately 4 per cent for the steam required for feed pump, plus the amount required for operating any other auxiliaries about the plant,

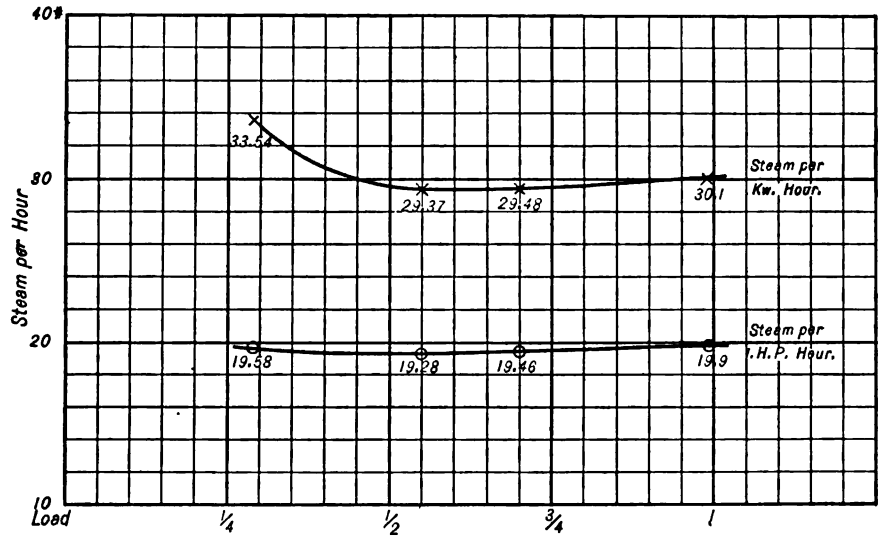

FIG. 36. ECONOMY CURVES UNAFLOW ENGINE.
(*Skinner Engine Co.*).

19 x 20 Saturated Steam, 136.4 lb. Non-condensing. Atmospheric Exhaust on one-fourth and one-half Loads, 1½ Pounds Back Pressure on three-fourths and full Loads.

to obtain the total estimated fuel consumption. The above figures are bettered by approximately 33 per cent for condensing engines. To the resulting figures must, however, be added about 10 per cent for operating the condenser auxiliaries and feed pump.

TYPICAL ENGINE SPECIFICATION

The following is an extract from a *Treasury Department* specification for two 100 kw. and two 200 kw. direct-connected high-speed engines and generators for the *United States Post Office and Courthouse*, Chicago, Ill.:

Type. The engines to be of the single-cylinder, automatic, horizontal, side or center crank type. They shall be designed to operate non-condensing on dry saturated steam at 150 pounds gage pressure at the throttle. The speed of the 100-kilowatt generator engines to be not more

than 250 revolutions per minute, and the 200 kilowatt generator engines to be not more than 200 revolutions per minute.

Capacities. The engines to be designed so as to operate most economically when generators are delivering three-quarter load at the rated voltage and speed, and shall be capable of operating the generators for two hours when delivering 25 per cent overload at rated voltage.

Foundation. Foundations to be of the required form to suit engine and generator sub-bases, to be constructed of 1 : 2 : 3 concrete, with the bottom not less than 5 feet below the floor line. The top must extend not less than 6 inches beyond the edge of sub-base frames all around and the batter in the depth specified to be not less than 3½ feet each side. Concrete foundation to be provided with cushion of 6-inch deep sand. Foundation bolts to be provided with washers and wrought-iron sleeves.

Sub-bases. Each engine to be provided with a heavy and substantial cast-iron sub-base, upon which shall be mounted the engine, the sub-bases of the engines to be extended under cylinders for support of cylinders.

The sub-base of generators must be secured to sub-base of engine in a suitable manner and both sub-bases to be secured to the foundations.

Frames. Each engine to be provided with a heavy and substantial cast-iron frame designed for strength, rigidity, and compactness, and be provided with suitable covers to prevent throwing of oil and allowing dust to come in contact with the moving parts.

Bearings. Bearings shall be long, well proportioned, and dust proof. The main bearing to be of the removable-shell type and the outboard bearing to be of the oil-ring type. Bearings to be lined with genuine babbitt metal carefully peened in place and accurately bored to gage. The outboard bearings to be provided with large-size oil wells, visual gages, and pet cocks for drawing the oil. Bearings to be provided with means for adjustment.

Lubricating System. Each engine to be provided with an automatic self-lubricating continuous circulating system which shall supply pure, clean oil continuously to all bearings, etc., the operation of system to be positive and free from throwing or spilling the oil.

Cylinders. Each cylinder to be made of best grade of close-grained cast iron, bored true and smooth, and of sufficient thickness to allow for reboring. The cylinder to be well lagged with magnesia or other material having equal heat insulating value and covered with ornamental cast-iron jackets or with Russia iron, properly secured to the cylinder casting.

Pistons. The piston heads shall be hollow cast iron, with at least two snap rings with lap joints, made from first quality of hard, close-grain cast iron sprung into accurately fitting grooves. Rings shall override the bore of cylinder. Piston rods to be best quality nickel steel. Rods to be turned to a taper at the piston ends and each driven up to a shoulder and be securely held by a heavy nut to be drilled and provided with cotter or dowel pin. The forward ends to be screwed into crossheads and provided with a jam nut and suitable lock to prevent turning.

Crossheads. The crossheads to be made of cast steel, and be provided with adjustable bronze shoes circular in form; shoes constructed of cast iron and babbitt will be acceptable. Crosshead pin to be made of steel hardened and ground and held in place by taper fit and nut.

Connecting Rods. The connecting rods to be forged open-hearth steel in one piece with solid crank-pin end and crosshead end. The crosshead boxes to be made of phosphor bronze adjustable by means of wedge. Crank ends to be fitted with boxes of steel or phosphor bronze and lined with genuine babbitt metal peened and bored to fit the pins and be adjustable.

Crank Shafts. Crank shafts to be constructed of open-hearth steel forged in one piece, with counterbalancing crank discs of annealed steel, securely fastened thereon.

Valves. Each engine to be fitted with four valves of the semi-rotary, poppet, or gridiron type, designed to be slightly unbalanced and securing positive steam-tight seating over the admission and exhaust ports. Steam valves to be of the multiported type, giving ample port openings for all points of cut off. Exhaust valves to be designed to give ample port area and insure tightness. All valves to be constructed of best quality hard close-grain cast iron. The

steam valves to be provided with removable bushings or cages; gridiron valves to be provided with suitable balancing plate.

Valve Mechanism. The valve mechanism on each engine to be designed to give quick

FIG. 37. NORDBERG UNIFLOW ENGINE CYLINDER.

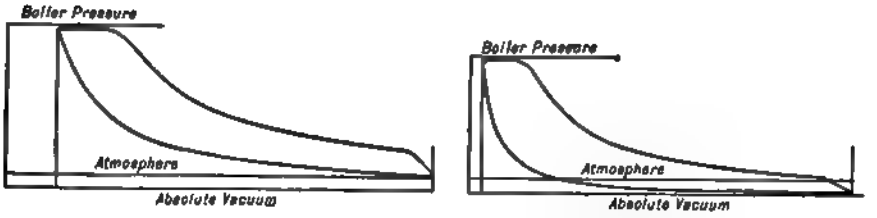

NON-CONDENSING. CONDENSING.

FIG. 38. INDICATOR CARDS FROM NORDBERG UNIFLOW ENGINE.

NON-CONDENSING. CONDENSING.

FIG. 39. ECONOMY CURVES NORDBERG UNIFLOW ENGINE.

and positive motion to the valves in opening and closing. All pins subject to wear to be made of steel, hardened and ground. All boxes for pins to be made of phosphor bronze and to be adjustable without filing; boxes constructed of steel with bronze bushings will be acceptable. Lubrication of pins and bearings to be accomplished while in motion by compression grease cups placed at accessible points or to operate in oil wells.

Eccentrics. The eccentrics to be strong and light to reduce the strain upon the governor springs. The eccentric straps to be lined with best quality of antifriction metal. Ample means of lubrication to be provided and designed to be free from oil throwing when in motion.

Governors. Each engine to be equipped with an inertia governor of approved type.

The governor pins to be made of steel, hardened and ground true. The lever-arm bearing to be made with hardened steel bushings and rollers.

Steam Consumption. Each bidder must state in his proposal sheet the speed, indicated horsepower, full load of each engine.

The minimum steam consumption when operating under conditions herein specified at uniform loads must be stated.

Each engine when operated under conditions herein specified and at uniform loads must not consume more than amounts of dry steam in pounds per kilowatt hour, determined by the weight of condensed exhaust steam for each load as stated below:

	Load				
	25 per Cent	50 per Cent	75 per Cent	100 per Cent	125 per Cent
100 kilowatt generator engine, dry steam	74	48	41	41	43
200 kilowatt generator engine, dry steam	74	45	40	40	41

Shop Test of Engines and Generators. The efficiency, capacity, etc., of each unit to be determined by actual test in the presence of the department's authorized agent, who shall determine the test conditions.

The tests are to be made at the shop where engines are constructed, and to begin 10 days after receipt of notice from contractors of their readiness to commence tests, and to be at the expense of the contractors, except traveling and other expense of the department's agent. The generators to be shipped to engine builder's shop for test.

Each unit to be run at one-fourth, one-half, three-fourths, full, and one and one-fourth loads for one hour under each load, during which time the exhaust steam will be condensed and weighed and indicator cards taken as often as deemed necessary.

Engines to be run at the speeds specified with steam at 150 pounds pressure per square inch at the throttle, quality of which will be determined by throttling calorimeter placed in steam pipe above throttle.

Penalty. It must be distinctly understood to be one of the conditions under which bids are submitted for the work embraced in the specification that the engines and generators will meet every requirement of the specifications and the guaranteed amounts for steam consumption named by bidder, under which conditions the contract price will be paid. In event the units fail to meet the specification requirements or the steam consumption is greater than that guaranteed by the bidder, the department shall have the right to reject the unit or units absolutely and require the supply of satisfactory unit or units which shall comply with all contract requirements in regard thereto; or if it elects to accept same in event steam consumption, at *any load*, is greater *irrespective of other loads* than that named in the proposal, then the contract price shall be the amount named in the contract for a satisfactory plant less the amount of deficiencies shown by test based on the following schedule for each pound or fractional part of a pound of steam per kilowatt hour:

	Load				
	25 per Cent	50 per Cent	75 per Cent	100 per Cent	125 per Cent
100 kilowatt-hour unit	$30	$120	$420	$180	$75
200 kilowatt-hour unit	60	240	840	360	150

Plant Test. At expiration of three months' operating test, a test will be made to determine the steam consumption per kilowatt-hour under operating conditions and it will form a basis for comparison of steam consumption at expiration of one year from that date.

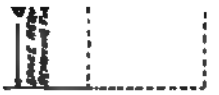

FIG. 40. CAPACITY AND GENERAL DIMENSIONS.

The Buckeye-Mobile is made in nine sizes, from 75 Hp. to 600 Hp., to suit the prevailing capacities of direct-connected generators from 50 Kw. to 400 Kw. inclusive.

Valves are not to be reground or scraped during a period of one year and steam consumption at end of one year must not exceed the amount ascertained by steam meter as above noted.

Steam consumption to be measured by recording steam-flow meter now installed on the premises for both tests. This instrument will be calibrated before each test.

In the event it is found that the steam consumption is greater at end of year, then the department reserves the right to require the contractor to make such changes in the engines as it elects at the expense of the contractor.

The supervising architect reserves the right to waive these tests or any portion thereof, and require contractor to submit certified test sheets, in triplicate, for approval, it being understood that those portions not waived shall be exacted when apparatus are installed if not performed at shop as specified above.

Regulation. After engines are installed in position they must be adjusted to run smoothly and practically noiselessly. They must be tested at shops for regulation, which tests must show that slow change of speed from no load to full load and vice versa will not show more than 1½ per cent variation and from full load suddenly thrown on or off the variation shall not exceed 2 per cent.

Fittings. Each engine to be furnished with the following fittings:

One throttle valve.
Automatic cylinder relief and drain valves.
Mechanical cylinder lubricator, piping, etc.
Metal packing (approved) for piston rods and valve-stem stuffing boxes.
Auxiliary hand oil pump.
Steam-chest drain connections with valves.
Indicator piping with three-way cocks and angle globe valves.
Attached indicator reducing motion.
Set of adjusting wrenches on hardwood or cast-iron board.
All necessary drip, drain, and indicator piping, which must be brass, nickel plated, exposed above floor.

Painting, Etc. Engines and generators to be filled, rubbed down, and after installed in building to be finished with two coats of paint, color to be very dark green, then striped with gold leaf and varnished.

TABLE 26

SMALL RECIPROCATING ENGINE DRIVEN GENERATOR SETS. RELATIVE WEIGHTS AND APPROXIMATE SELLING PRICES

Type	Gen. Kw.	Engine Size	Eff. Hp. ¼ Cut Off	Eff. Hp. ⅛ Cut Off	R.P.M. Eng.	R.P.M. Gen.	Weight Engine	Weight Generator	Weight Complete	Price Engine	Price Generator	Price Complete
Direct-connected 60 cycle, 2 or 3 phase A.C.generator.Any voltage up to 2200. Exciternotinel'd.	110	15″x14″	160	198	277		13,600	10,800	24,400	$1,508	$1,521	$3,029
	125	16″x16″	196	238	277		21,000	10,800	31,800	1,849	1,521	3,370
	125	16″x16″	196	238	225		21,000	12,800	33,800	1,849	1,980	3,829
Direct-connected D. C. generator 125 or 240 volts Compound wound.....	100	14″x14″	162	194	290		13,100	11,800	24,900	1,413	1,237	2,650
	125	16″x14″	181	206	250		13,900	14,800	28,700	1,597	1,566	3,163
	125	16″x16″	196	238	210		21,000	18,000	39,000	1,849	2,034	3,883
	135	16″x16″	196	238	225		21,000	16,000	37,000	1,849	1,710	3,559
Belted, 60 cycle, 2 or 3 phase A. C. generator. Any voltage up to 2200. Exciter not included.	100	14″x14″	150	174	275	900	12,000	8,100	20,100	1,188	1,071	2,259
	115	14″x14″	150	174	275	900	12,000	8,100	20,100	1,188	1,071	2,259
	150	16″x16″	210	248	250	900	19,000	9,300	28,300	1,575	1,386	2,961
Belted, D. C. generator 125 or 240 volts Compound wound.	100	16″x14″	183	220	275	650	12,750	9,350	22,100	1,368	1,134	2,502
	100	16″x16″	196	238	225	450	19,000	13,000	32,000	1,575	1,485	3,060
	125	16″x16″	210	248	250	550	19,000	13,000	32,000	1,575	1,485	3,060

NOTE.—Only simple, automatic, non-condensing engines are listed above.

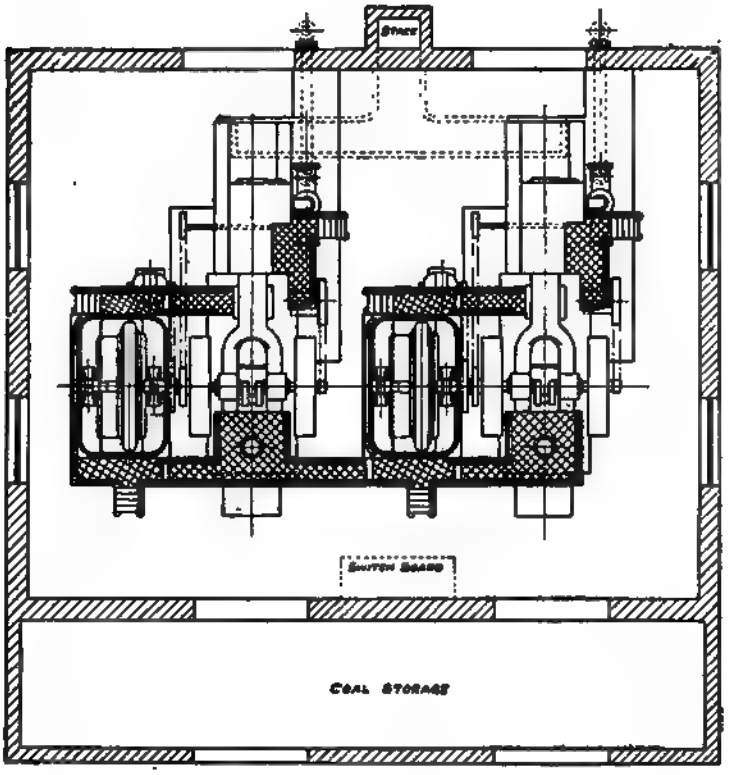

FIG. 41. USUAL LAYOUT FOR TWO OR MORE BUCKEYE-MOBILE UNITS.

TABLE 27

APPROXIMATE PRICES OF HIGH-SPEED 4-VALVE ENGINES

F.O.B. Works—Cost of Generators Included in Price

Simple 4-Valve Horizontal Type

Hp. Rating	Stroke, Inches	Size of Generator Kw.	R.P.M	Net Price
150	16–18	100	235–250	$2,950
225	18–20	150	215–235	3,400
300	24–27	200	150–200	4,300
375	24–27	250	175–200	4,700
375	24–27	250	150–165	5,400
450	24–27	300	150–200	5,650
600	30–36	400	140–160	7,250
675	30–36	450	125–160	7,500

Tandem Horizontal—4-Valve Type

150	16–18	100	235–250	$3,900
225	18–20	150	215–235	4,500
300	24–27	200	150–200	5,700
375	24–27	250	175–200	6,200
375	24–27	250	150–165	7,250
450	24–27	300	150–200	7,750
600	30–36	400	140–160	9,700
675	30–36	450	125–160	10,000

Cross-Compound—4-Valve Type

250	16–18	150	200–225	$5,600
300	16–18	200	200–225	5,950
375	18–20	250	175–225	6,500
450	18–20	300	200–225	6,800
450	24–27	300	150–175	7,550
600	24–27	400	150–200	7,850
750	24–27	500	150–175	10,000
900	24–27	600	150–175	10,400
1,125	30–36	750	150–160	12,750
1,350	30–36	900	125–150	13,200

CHAPTER XI

STEAM TURBINES

The steam turbine, owing to its compactness due to its high speed and the absence of many moving parts, is rapidly replacing the reciprocating engine for electric service, especially when condensing installations are considered. It has become the standard for central station work. The economy is largely dependent upon the efficiency of the condensing apparatus employed as the turbine depends upon a high vacuum being maintained to show its best economy. The economy for the same degree of vacuum, 24″ to 26″, is about the same as a high-grade reciprocating engine of equal capacity.

The turbine, however, is capable of successfully operating at 28″ to 29″ of vacuum with a corresponding increase in economy whereas the reciprocating engine, owing to limitations in the design of the exhaust ports and passages, is not capable of handling the large volume of low-pressure steam generated by extremely high vacuums, without a corresponding increase in back pressure due to frictional resistance of the small ports. This tends to offset the gain due to the increased vacuum.

Among other advantages of the turbine may also be mentioned the close speed regulation and the fact that high-speed machinery can be driven directly without the expense or danger incidental to belts and ropes. The shaft can be placed horizontally or vertically, according to the requirements of the driven machine. The uniform and continuous flow of steam to the turbine permits of smaller and less expensive steam lines, which in turn reduces the loss of heat by radiation.

Of especial importance in relation to exhaust steam heating is the fact that the exhaust is not polluted by cylinder oil, also that the theoretical economies of superheated steam can be realized without introducing lubrication difficulties.

Most auxiliary apparatus installed in steam power plants is adaptable for direct driving by steam turbines; particularly so are centrifugal boiler-feed pumps, circulating pumps, hot-well pumps, centrifugal blowers and compressors, exciter dynamos, etc. Centrifugal high-vacuum air pumps are also coming into use and by means of gears the turbine can be adapted to driving slow-speed induced draft fans, coal and ash conveyors, reciprocating air pumps, automatic stokers, large low-head circulating pumps, etc.

The economy of non-condensing turbines is considerably below that of the reciprocating engine and unless the demand for exhaust steam for heating or process work is sufficient to consume practically all of it the high-speed non-condensing engine is ordinarily preferred. The turbine will maintain its original economy over a long period. The reciprocating engine depends upon the tightness of the valves and piston for economy and unless careful attention is given to keeping them tight the economy, after a period, may become no better than a turbine of equal capacity. The economy of a turbine is, however, more seriously effected by high back pressure and moist steam than the reciprocating engine and these facts should be borne in mind when considering the installation of a non-condensing turbine.

The steam consumption of non-condensing turbines from 35 to 300 kw. at 100 lb. gage initial pressure and atmospheric exhaust is given by Table 1, as well as the corrections to apply for other conditions that may obtain.

Corrections for Change in Operating Conditions of Steam Turbines. In order to obtain the water rate of a steam turbine operating under conditions as to pressure, superheat and vacuum other than as reported, the following corrections may be applied.

TABLE 1

WATER RATE CURTIS NON-CONDENSING TURBINES

100 Lb. Gage Initial Pressure—Atmospheric Exhaust

Rated Capacity Kw.	Steam Consumption; Lb. per Kw.-Hour		
	Load		
	½	1	1¼
35	85	63	58
75	72.5	59.5	57.5
100	60.5	49.5	48.5
125	68	56	56
300	57	53	52.5

Note.—Deduct approximately 2% from values given in table for every 10 lb. increase in the initial pressure. Add 2% for each 1% of moisture in steam. Increase water rate by the following amounts for back pressures stated: 2 lb., 3%; 3 lb., 5%; 4 lb., 7½%; 5 lb., 10½%.

Superheat. Decrease water rate 1 per cent for each increase of 10° F. superheat for 0°–100° superheat and 1 per cent decrease for each 12° increase in superheat from 100°–200° superheat.

Moisture. Increase water rate 2 per cent for each 1 per cent increase in moisture.

Pressure. Decrease water rate 2 per cent for each 10 per cent increase in initial pressure between 100 and 180 lb. gage pressure and 1.9 per cent for pressures 180 to 200 lb. gage. For low pressure turbines decrease water rate by 4 per cent for each 10 per cent increase in initial pressure.

Vacuum. For increase in vacuum from 26″ to 27″ decrease water rate 5 per cent. For increase in vacuum from 27″ to 28″ decrease water rate 6 per cent.

For increase in vacuum from 18″ to 28½″ decrease water rate by 3.87 per cent.

For increase in vacuum from 28½″ to 29″ decrease water rate by 5.75 per cent.

For low-pressure turbines the decrease in water rate is approximately as follows:

12 % for increase in vacuum from 26″ to 27″
13¾% for increase in vacuum from 27″ to 28″
8½% for increase in vacuum from 28″ to 28½″
11¼% for increase in vacuum from 28½″ to 29″

The expected water rate ($W\,R$) for a change in condition may also be calculated by multiplying the test water rate ($W\,R_t$) by the ratio of the water rate of the *Rankine* engine for new condition (W_n) to the water rate for test condition (W_t) also based on the *Rankine* engine (page 266).

$$\text{or } W\,R = W\,R_t \times \frac{E_t}{E_n}$$

This method of correcting the actual test results for the conditions as specified by a guarantee is also applied to steam engine tests within limits.

Elementary Theory. A steam turbine may be defined as a machine designed to utilize the energy of steam flow for mechanical work, the force required to retard the weight of rapidly moving vapor being applied to buckets or blades attached to the periphery of a rotating disc or drum. From mechanics the change in kinetic energy of a moving mass of W pounds having an initial velocity of w_1, and final velocity of w_2 ft. per sec., is:

$$K = \frac{W\,(w_1^2 - w_2^2)}{2\,g} \text{ ft.-lb.} \quad . \quad . \quad . \quad . \quad . \quad . \quad . \quad . \quad . \quad . \quad . \quad . \quad (1)$$

Let W = the weight of steam issuing from a nozzle, lb. per sec. If the stream or jet having a velocity of w_1 ft. per sec. be directed on a turbine blade or bucket having the shape or form as

shown by Fig. 4 and the blade is held stationary the stream will issue from the blade with the same velocity.

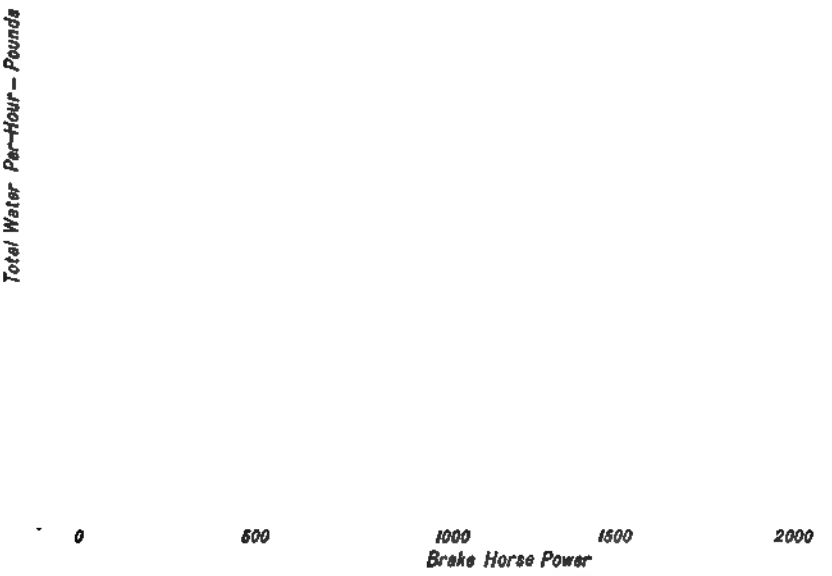

FIG. 1.

The diagonal lines or "Water Lines" show the total water weighed or steam condensed per hour at various loads. The curves or "Water Rate Curves" show the variation in water, or more correctly, in steam, consumption per horse-power per hour at various loads, i.e., the "Water or Steam Rate" of the turbine. Each curve corresponds to a "Water Line"—the upper curve to the upper line, the lower to the lower line, etc.

Operative conditions covered by the tests are:

(a) Condensing—saturated and superheated steam.

(b) Non-condensing—saturated and superheated steam.

(c) One-quarter rated load to 100 per cent overload.

In the two overload tests, the operation of the automatic secondary valve may be observed. It comes into action at a definite predetermined load as indicated by a bend in the water line. With the aid of this valve the best economy of the turbine is secured throughout the range of normal loading, while large overload capacity is available when desired, although at slightly decreased efficiency. When the secondary valve, however, has come fairly into action, the efficiency of working undergoes gradual improvement, as shown by the reversal of curvature of the Water Rate curves.

The considerable improvement in turbine economy with superheated steam at various loads for both condensing and non-condensing tests is well shown by the distance between the two pairs of Water Rate curves.

A turbine designed for condensing work will not operate non-condensing with quite as good economy as if designed to exhaust against atmospheric pressure. That this economy is, however, excellent, is shown by the upper pair of curves. The water rate is somewhat less than double the condensing water rate.

If, however, the blade is moving with a velocity of c ft. per sec. the stream will leave the blade with an absolute velocity, $w_2 = w_1 - 2c$.

WESTINGHOUSE-PARSONS TURBINE

Corrections

For a steam pressure of 175 lb. multiply the water rate by 0.98

For superheat decrease the water rate by the following:

1% per 10° up to 100°
½% per 10° between 100° and 150°

For the corrections per inch of vacuum at full load use the following:

For a 300 kw. unit about 2%
" " 500 " " " 3%
" " 800 and larger " 3½%

Per cent of Rated Capacity

Rating of Turbine

FIG. 2.

The energy imparted to the blade is equal to K, equation (1), ft.-lb. per sec.
If the buckets are moving with a velocity $c = \frac{1}{2} w_1$, then the energy absorbed by the

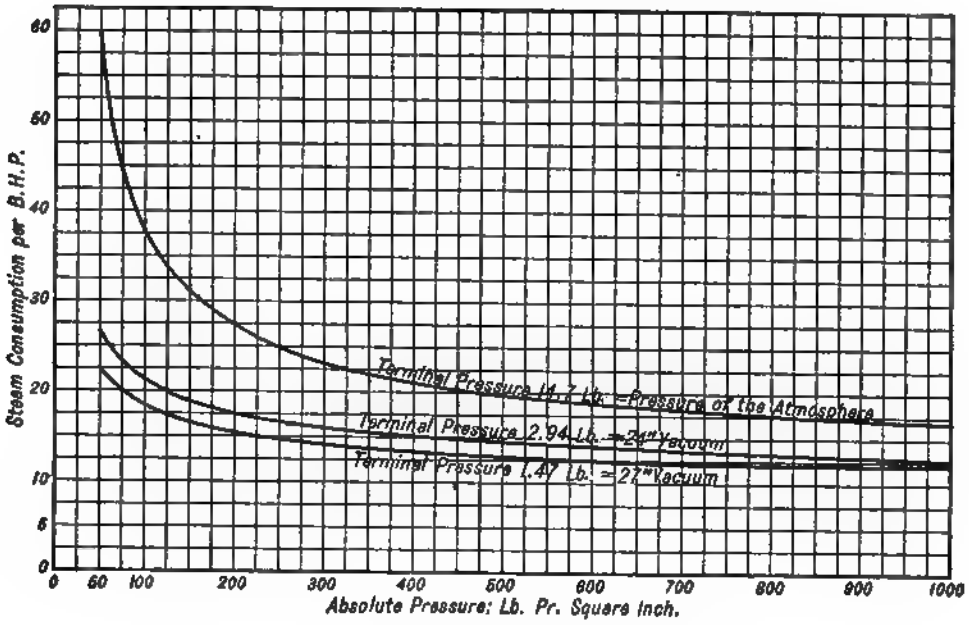

FIG. 3. DE LAVAL TURBINE PERFORMANCE CURVES.

$P_m = ($

FIG. 4.

wheel and the work done are a maximum. In this case $w_2 = w_1 - 2c = w_1 - 2 \times \frac{1}{2} w_1 = 0$ and $K = \frac{W w_1^2}{2g}$.

Impulse and Reaction. The magnitude of the force exerted by the jet on the blade may be determined by reference to the formula from mechanics:

$$\text{Force} = \text{mass} \times \text{acceleration},$$

$$F = \frac{W}{g} \times a \text{ lb.} \quad \ldots\ldots\ldots\ldots\ldots \quad (2)$$

in which "a" is the negative acceleration of the jet or stream in the direction of motion of the moving blades. The impulse effect of the jet on the form of bucket, Fig. 4, is:

$$F_p = \frac{W}{g}(w_1 - c) \text{ lb.}$$

As the jet is turned through an angle of 180 degs. by the bucket the *reaction* produced on the bucket is equal to the *impulse* so that the total force acting on the bucket is equal to

$$F = \frac{2\,W(w_1 - c)}{g} \text{ lb.} \quad \ldots\ldots\ldots\ldots\ldots \quad (3)$$

The work performed is:

$$F\,c = \frac{2\,c\,W(w_1 - c)}{g} \text{ ft.-lb. per sec.} \quad \ldots\ldots\ldots\ldots \quad (4)$$

Available Energy of Steam. The energy of steam may exist in two forms, heat and kinetic energy. When confined, as in a boiler, under pressure, the energy exists wholly in the form of heat.

Its capacity for doing work is analogous to that of water stored in a reservoir.

The available energy of the water is dependent upon the head or difference in elevation of the water in the reservoir and some lower level at which a water-wheel may be located.

In the case of steam under pressure the available energy is dependent upon the difference in pressure in the boiler and the pressure maintained in the vessel into which the steam is permitted to flow.

According to the Law of Conservation of Energy, the total energy in a pound of steam during expansion from a higher pressure (p_1) to a lower pressure (p_2) remains constant. The potential energy of one pound of steam is: 778 i_1 ft.-lb., in which 778 is the mechanical equivalent of heat and i_1 the heat content of one pound above 32° F. at an absolute pressure of p_1. The energy of one pound of moving steam at a lower pressure, p_2, is equal to the remaining potential energy (778 i_2) plus the kinetic energy $\frac{w_2^2}{2g}$ or $778\ i_2 + \frac{w_2^2}{2g}$. In which i_2 is the heat content corresponding to pressure p_2 and w_2 the velocity in ft. per sec. Expressing the law in the form of an equation, we have:

$$778\ i_1 = 778\ i_2 + \frac{w_2^2}{2g}$$

$$\text{or } w_2 = 224\sqrt{i_1 - i_2} \text{ ft. per sec.} \quad \ldots\ldots\ldots\ldots \quad (5)$$

This is the theoretical velocity attained at exit from a properly constructed nozzle.

The above equation, when applied to straight or converging tubes, holds for all differences of pressure so long as the lower absolute pressure does not exceed the *critical* pressure. The critical pressure or the lower absolute pressure p_2, above which the velocity does not further increase, is equal to $0.58p_1$ as proven both by theory and experiment. This ratio 0.58 applies to dry saturated steam. If the steam is highly superheated initially the ratio is about 0.55.

THE IMPULSE TURBINE

In a turbine of the pure impulse type the expansion and positive acceleration of the steam take place only in stationary nozzles or guide vane passages. If the complete expansion takes place in a single set of nozzles and the jet is directed on a single wheel or rotor the turbine is

FIG. 5. THE MAIN ELEMENTS OF THE DE LAVAL TURBINE.

FIG. 6. ARRANGEMENT OF STEAM NOZZLES WITH TURBINE WHEEL OF DE LAVAL TURBINE.

termed a *single-pressure single-velocity stage* machine, the pressure being the same on both sides of the wheel.

The first commercially successful machine of this type was the *De Laval* turbine. The arrangement of steam nozzles with turbine wheel is shown by Figs. 5 and 6. The construction of the wheel and blades for a 20 hp. *De Laval* turbine is given by Figs. 7, 8 and 9.

The dimensions are given in millimeters. The velocity of the steam jet in the single pressure stage turbine varies approximately from 2800 ft. per sec. for non-condensing to 3800 ft. per sec. for condensing operation. In order to absorb the kinetic energy of steam flowing at such high velocities with a single wheel or row of blades the peripheral velocity is necessarily very high, peripheral velocities ranging from 500 to 1300 ft. per sec. and wheel speeds of 10,000 to 30,000 r.p.m. being common. In order to utilize such high speeds in practice the wheel or rotor speed is reduced by suitable gearing as shown by Fig. 10. The gear ratio is made approximately 1 to 10.

The speed of the *De Laval* turbine is controlled by means of a throttling governor.

The following table gives the speeds and size of wheels that have been employed in this type of turbine:

TABLE 2

Size of Turbine, d.hp.	Diam. Wheel Below Blades, Inches	Rev. per Minute	Peripheral Vel., Ft. per Sec. "C"
5	4	30000	515
15	6	24000	617
30	8 1/4	20000	774
50	11 5/8	16400	846
100	19 3/4	13000	1115
300	30	10600	1378

Steam Nozzles. In order to determine the dimensions of steam nozzles required for a particular turbine an estimate of the weight (W) of steam that will be required per sec. must first be made. This weight may be approximated from previous tests made on similar turbines. See water rate curves, Figs. 1, 2 and 3, and corrections to apply for other conditions of operation:

Let p_1 = absolute initial pressure at entrance to nozzle.
p_p = absolute pressure at throat of nozzle.
= $0.58p_1$.
p_2 = absolute terminal pressure.
i_1 = initial heat content corresponding to pressure p_1, B.t.u.
= $r + q$ dry and saturated steam.
= $xr + q$ wet steam with quality x.
= $r + q + c_p\ (t_1 - t_s)$ superheated steam.
i_m = heat content corresponding to pressure at throat p_m after adiabatic expansion from p_1 to p_m.
i_2 = heat content corresponding to terminal pressure p_2 after adiabatic expansion from p_1 to p_2.
W = weight of steam flowing per sec., lb.
= Estimated water rate for turbine per brake horsepower-hour × brake horsepower divided by the no. nozzles × 3600.
A_m = Area of nozzle at throat, sq. ft.
A_e = Area of nozzle at exit, sq. ft.
w_m = velocity of steam at throat, ft. per sec.
w_e = theoretical vel. of steam at exit, ft. per sec.
v_m = specific volume of steam corresponding to p_m.
= $x_m v''_m$ (approx.) v''_m = sp. volume sat'd steam p_m.
v_2 = specific vol. corresponding to p_2.
= $x_2 v''_2$ (approx.) v''_2 = sp. volume sat'd steam p_2.

$$A_m = \frac{Wv_m}{w_m} \quad . \quad . \quad . \quad . \quad . \quad . \quad . \quad . \quad . \quad . \quad . \quad . \quad . \quad (6)$$

$$A_e = \frac{Wv_2}{w_e} \text{ sq. ft.} \quad . \quad . \quad . \quad . \quad . \quad . \quad . \quad . \quad . \quad . \quad . \quad . \quad . \quad (7)$$

$$w_m = 224\sqrt{i_1 - i_m} \quad . \quad . \quad . \quad . \quad . \quad . \quad . \quad . \quad . \quad . \quad . \quad . \quad . \quad (8)$$

$$w_e = 224\sqrt{i_1 - i_2} \quad . \quad . \quad . \quad . \quad . \quad . \quad . \quad . \quad . \quad . \quad . \quad . \quad . \quad (9)$$

The values of i_m and i_2 may be readily found by making use of the entropy tables.

The Mollier Chart. Problems involving the adiabatic expansion of steam are most conveniently and rapidly solved by means of the *Mollier* chart, Fig. 11.

An example showing the method of using the chart follows.

Example. Calculate the throat and exit diameters required for each of 4 nozzles to be used in a single pressure stage turbine of 100 brake horsepower capacity. Initial pressure below governor valve (ring pressure) $p_1 = 140$ lb. per sq. in. absolute; terminal pressure $p_2 = 15.7$ lb. per sq. in. absolute. Estimated water rate of turbine, 38 lb. per d.hp.-hour. Initial condition of steam dry and saturated

$$(x_1 = 1.0)\ W = \frac{38 \times 100}{4 \times 3600} = 0.264 \text{ lb. weight of steam flowing through each nozzle per sec.}$$

$p_m = 0.58 \times 140 = 81.2$ lb. per sq. in. absolute. Locate the initial condition of the steam at the intersection of the 140 lb. pressure line and the saturation curve. The heat content as read on the left-hand vertical scale is: $i_1 = 1194$. From the intersection on the saturation curve, above noted, pass vertically downward to the intersection with the diagonal pressure line corresponding to $p_m = 81.2$. The quality x_m is found to be 0.96 and the heat content 1150. Continue down on the same vertical

FIG. 7. WHEEL DISC.

until the intersection with a diagonal pressure line corresponding to $p_2 = 15.7$ is reached. The quality x_2 is found to be 0.878 and the heat content 1035. From the steam tables $v''_m = 5.41$ and $v''_2 = 25.22$. $v_m = 0.96 \times 5.41 = 5.19$. $v_2 = 0.878 \times 25.22 = 22.2$. $w_m = 224\sqrt{1194 - 1150} = 1485$. $w_v = 224\sqrt{1194 - 1035} = 2824$. The velocities w_m and w_v may be read direct by means of the combination B.t.u. and velocity scale provided with the chart. The actual nozzle exit velocity w_1 is less than the theoretical due to frictional resistance.

Stodola states that the loss of energy in steam turbine nozzles is approximately 15%. The actual or expected exit velocity (w_1) using this figure will be:

$$w_1 = 224\sqrt{(i_1 - i_2)(1. - 0.15)} = 0.922 w_v \quad \ldots\ldots\ldots\ldots \quad (10)$$

$$w_1 = 0.922 \times 2824 = 2604 \text{ ft. per sec.}$$

$$A_m = \frac{0.264 \times 5.19}{1485} = 0.00092 \text{ sq. ft. corresponding to 0.41 inch diameter.}$$

$$A_e = \frac{0.264 \times 22.2}{2604} = 0.00225 \text{ sq. ft. corresponding to 0.64 inch diameter.}$$

Design of Blades. The peripheral velocity (c) of the wheel is limited to the figures given by Table 2, for safety in operation. The centrifugal force developed by higher velocities produces stresses in the wheel that cannot be well taken care of and still provide for a fair factor of safety. In practice a blade giving a complete reversal of the jet, as shown by Fig. 4, cannot be used as the steam leaving the blade must clear the wheel. The steam must therefore for practical reasons enter and leave the wheel at an angle.

In the *De Laval* single pressure stage turbine the nozzle makes an angle $\alpha = 20°$ with the $x - x$ axis of the wheel, as indicated by Fig. 6.

The angle of entrance β_1 and angle of exit β_2 of the blades (Fig. 9) are made equal for convenience in construction. These angles vary in magnitude from 28 to 36 degrees with the

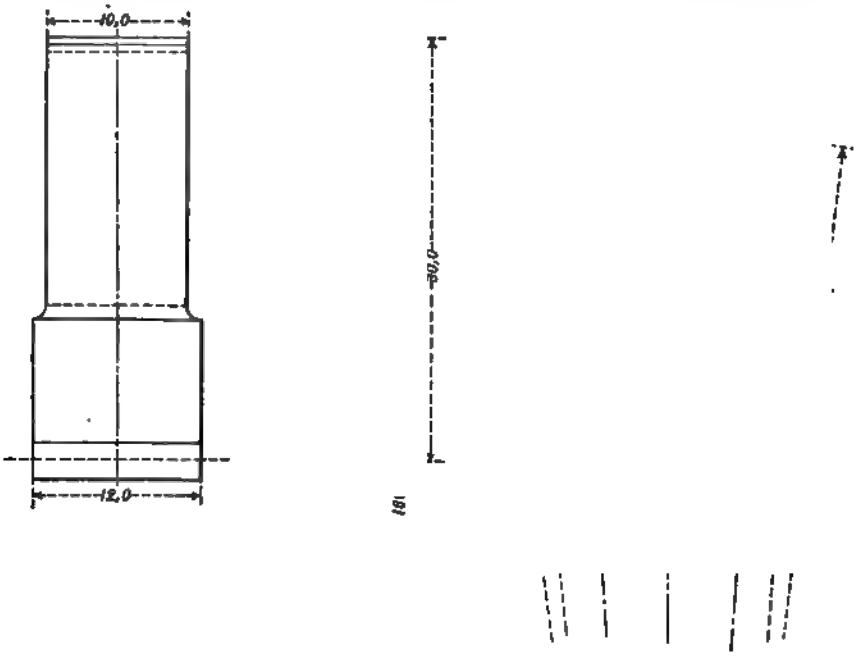

FIG. 8. DETAILS OF BLADES.

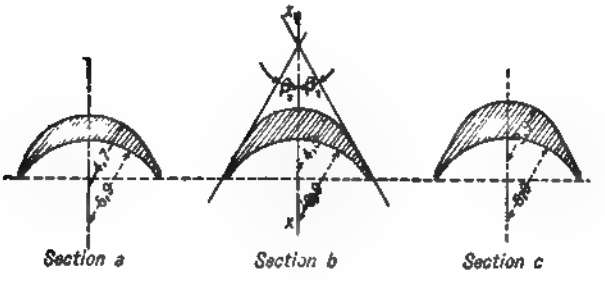

FIG. 9. BLADE SECTIONS.*

$x-x$ axis of wheel. The backs of the blades are made parallel with the angle lines. The thickness t at the blade edge is made approximately 0.02″ to 0.04″.

The front of the blade is a circular arc the radius of which is found by dropping a perpendicular from the edge of the blade to the center line. The following blade or bucket dimensions, Table 3, may be used for the size of machine indicated.

* Dimensions given in millimeters.

VELOCITY
B.T.U. FEET PER SECOND
0
0
600
1000
1500
50
2000
100
2500
150
3000
200
3500
250
4000
350
HEAT CONTENT, B.T.U.
ENTROPY

FIG. 11.

FIG. 10. HORIZONTAL SECTION OF DE LAVAL SINGLE-GEARED TURBINE.

A—Wheel Case.
B—Wheel Case Cover.
C—Turbine Wheel.
D—High Speed, or Pinion Shaft.
F—Outboard Bearing Bracket.
I—Outboard Ball Seated Bearing.
J—Outer Packing Bushing.
K—Inner Packing Bushing.
L—Gear Case.
M—Gear.
O—Gear Shaft Bearings.
P—Inner Pinion Bearing.
Q—Outer Pinion Bearing.
R—Flexible Coupling.
S—Vacuum Governor Air Valve.
T—Governor.
V—Nozzle Chamber.
W—Exhaust Chamber.
Y—Gear Shaft.

TABLE 3

Hp. Rating	Height of Bucket in Clear	Width of Bucket
10	0.60″	0.40″
100	1.10″	0.40″
500	1.40″	0.50″

Velocity Diagram. Referring to Fig. 12, the nozzle directs the steam on the blades with an absolute velocity of w_1. The wheel is moving with an absolute peripheral velocity of c. The steam enters the blades with a velocity *relative* to the blade equal to the resultant of w_1 and c or w_2.

The angle β_1 formed by w_2 and the $x - x$ axis is the correct entrance angle of blade to avoid shock. If the frictional loss in the blades be neglected, then the exit velocity w_2 relative to the blades is equal to the relative inlet velocity w_2.

In design the loss of energy in the blades for a single-pressure and single-velocity stage turbine may be assumed as being equal to approximately $\psi_2 = 24.7\ \%$ (*Stodola*).

The kinetic energy of the steam entering the blades is $\frac{W w_1^2}{2g}$.

The kinetic energy of the steam leaving the blades is $\frac{W w_2^2}{2g} = (1. - \psi_2)\frac{W w_2^2}{2g}$ from which

$$w_2 = w_2 \sqrt{(1. - \psi_2)} \quad \ldots \ldots \ldots \ldots \quad (11)$$

The loss of velocity in the blades may also be approximated by means of the curve, Fig. 13. The curves shown by Figs. 13 and 14 were taken from "Notes on the Curtis Turbine," by *Lieut. O. L. Cox, U. S. N.*

The component of w_1 in the direction of rotation is $w'_1 = w_1 \cos \alpha$ (α = nozzle angle). The velocity of the jet *relative* to the blade in the direction of rotation is

$$w'_1 - c \text{ or } w_1 \cos \alpha - c$$

The impulse on the blade in the direction of rotation or blade motion is:

$$F_p = \frac{W}{g}(w'_1 - c) = \frac{W}{g}(w_1 \cos \alpha - c) \text{ lb.}$$

The reaction produced by the jet on the blade in the direction of motion is

$$F_r = \frac{W}{g}(w'_4 + c) = \frac{W}{g}(w_4 \cos \phi + c) \text{ lb.}$$

The total force produced by the jet acting on the blades is therefore

$$F = F_p + F_r = \frac{W}{g}(w'_1 + w'_4) = \frac{W}{g}(w_1 \cos \alpha + w_4 \cos \phi)$$

The *energy* absorbed by the wheel *per lb. of steam* ($W = 1$) or useful work is

$$Fc = \frac{c}{g}(w'_1 + w'_4) = \frac{c}{g}(w_1 \cos \alpha + w_4 \cos \phi) \text{ ft.-lb.} \quad \ldots \ldots \quad (12)$$

The heat equivalent of the useful work is

$$\frac{Fc}{777.5} \text{ B.t.u. per lb. of steam} \quad \ldots \ldots \ldots \ldots \quad (13)$$

The efficiency of the nozzle and wheel is

$$E = \frac{\text{energy absorbed by wheel per lb. of steam}}{\text{Available energy of the steam per lb.}}$$

$$= \frac{Fc}{w_e^2/2g} = \frac{2c\,(w'_1 + w'_4)}{w_e^2} \quad \ldots\ldots\ldots\ldots\ldots\ldots \quad (14)$$

There is a further loss ψ_3 due to windage, leakage of steam past the buckets and mechanical friction.

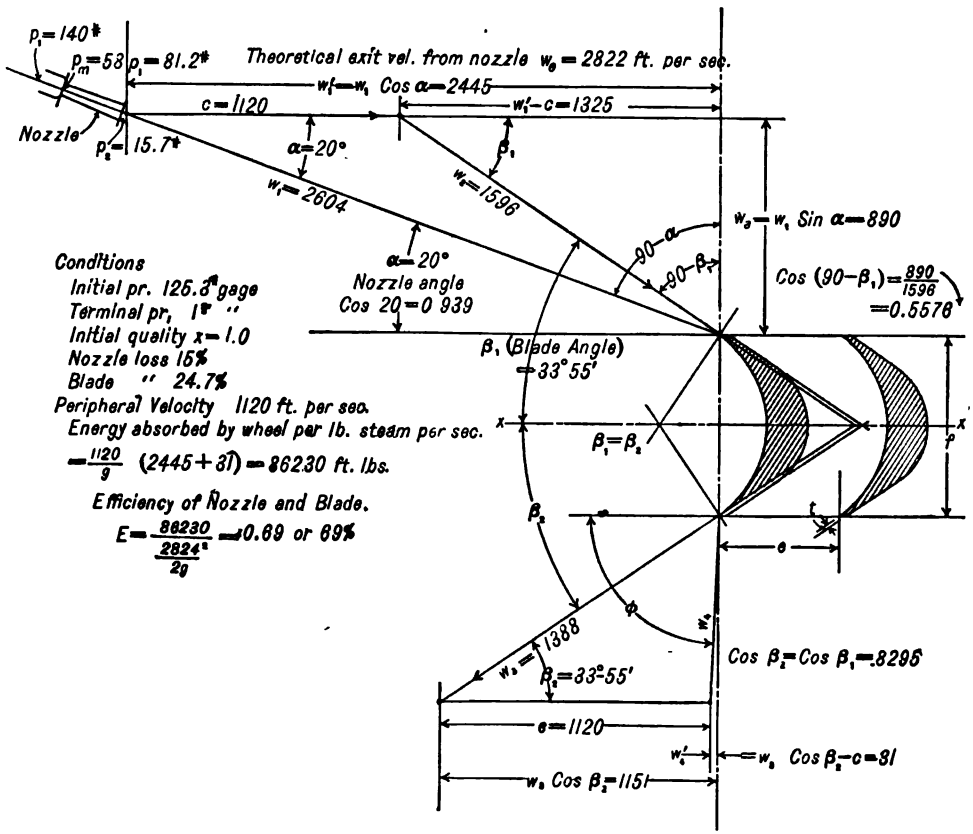

FIG. 12. VELOCITY DIAGRAM FOR SINGLE STAGE IMPULSE-TURBINE.

This is quite variable and depends upon the size, design, etc., of the machine under consideration. The combination is stated by various authorities as 38 to 80% of the useful work as found by equations (12) and (13), the lower figure used for non-condensing and the higher for condensing machines. The brake horsepower developed by the machine per lb. of steam per sec. is

$$\text{d.hp.} = \frac{Fc(1. - \psi_3)}{550} \quad \ldots\ldots\ldots\ldots\ldots\ldots \quad (15)$$

The estimated steam consumption per brake horsepower-hour or water rate of the turbine is

$$WR. = \frac{3600}{\text{d.hp. per lb. per sec.}} = \frac{1980000}{Fc\,(1. - \psi_3)}; \text{ lb. per hour} \quad \ldots\ldots\ldots \quad (16)$$

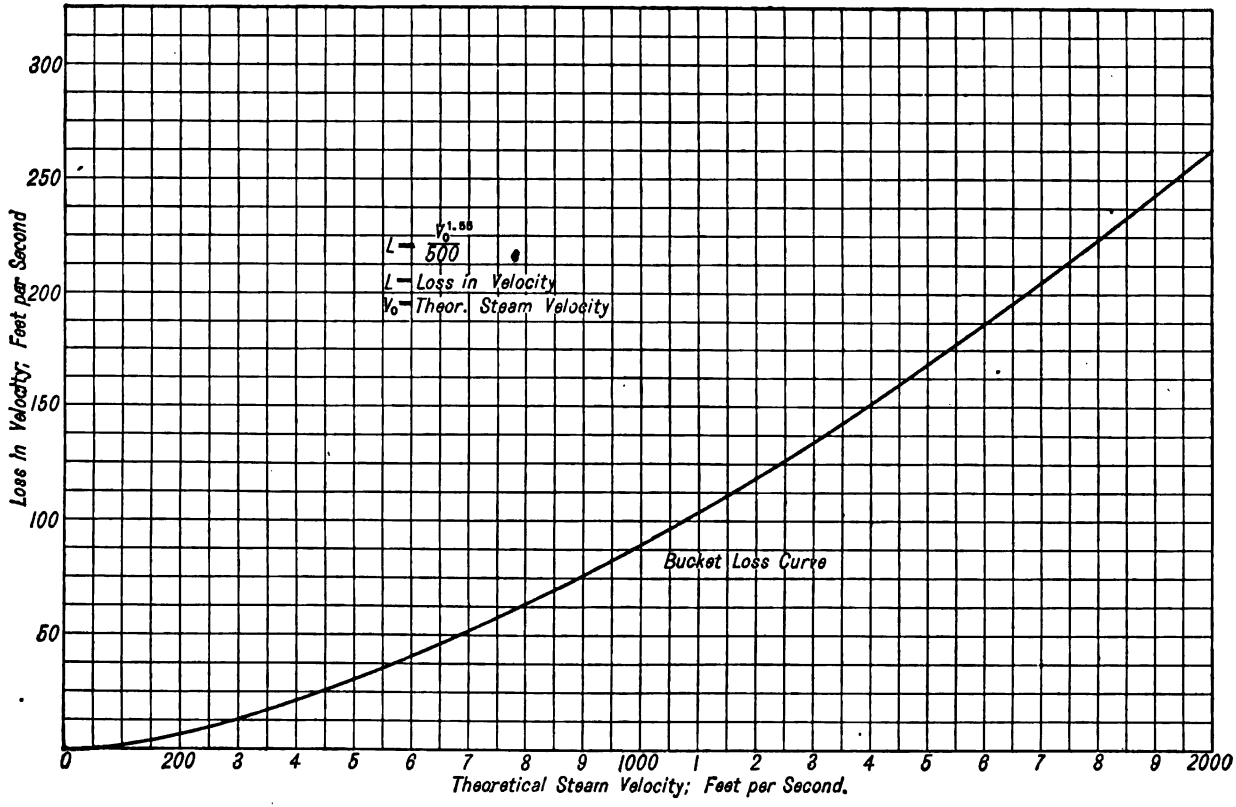

FIG. 13. BUCKET LOSS CURVE.

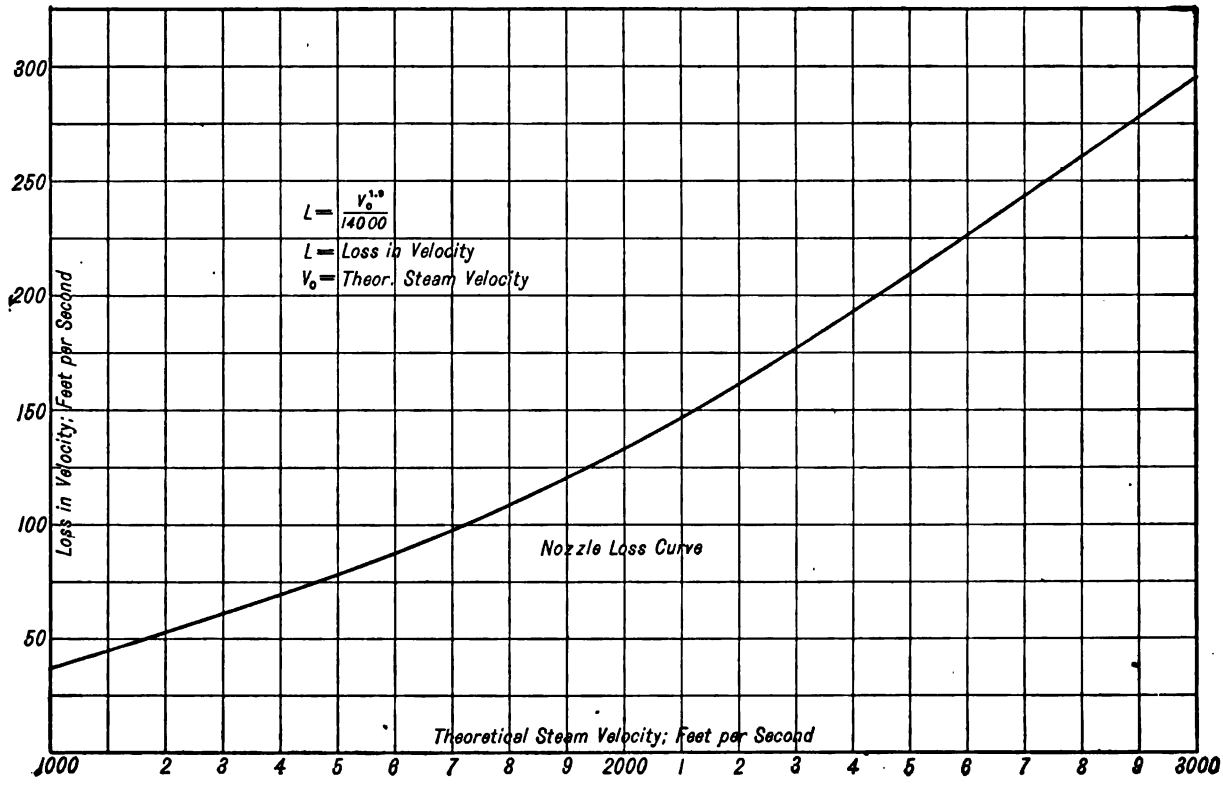

FIG. 14. NOZZLE LOSS CURVE.

Example. Required the blade angles and estimated steam consumption for a single stage impulse turbine to develop 100 brake horsepower and to be operated under the following conditions: $p_1 = 140$ lb. abs. $p_2 = 15.7$ lb. abs. steam initially dry and saturated, peripheral velocity of wheel $c = 1120$ ft. per sec. Assumed losses $\psi_1 = 15\%$. $\psi_2 = 24.7\%$. $\psi_3 = 39\%$.

Nozzle angle $\alpha = 20°$.

The theoretical nozzle exit velocity $w_e = 2824$, as given in the previous example for the same conditions of pressure.

$$w_1 = \sqrt{1. - .15} \times 2824 = 2604$$

Referring to Fig. 12, the absolute nozzle exit velocity w_1 is laid off to scale on the nozzle angle line and combined with the peripheral velocity $c = 1120$, as shown.

The component of w_1 in the direction of blade motion is $w'_1 = 2604 \times \cos 20° = 2604 \times 0.939 = 2445$ ft. per sec. $w'_1 - c = 2445 - 1120 = 1325$. The vertical or axial component of w_1 is $w_a = w_1 \sin \alpha = 2602 \times 0.342 = 890$.

$$\cot \beta_1 = \frac{w'_1 - c}{w_a} = \frac{1325}{890} = 1.4887 \text{ or } \beta_1 = 33° 55'$$

Entrance velocity to blade relative to the blade is: $w_2 = \dfrac{w'_1 - c}{\cos \beta_1} = \dfrac{1325}{0.8295} = 1596$ ft. per sec.

The relative velocity at exit from blade is:

$$w_3 = 1596 \times \sqrt{1. - 0.247} = 1388 \text{ ft. per sec.}$$

$$c + w'_4 = w_3 \cos \beta_3 = 1388 \times 0.8295 = 1151.$$

$$\therefore w'_4 = 1151 - 1120 = 31.$$

The energy absorbed by the wheel per lb. of steam from equation (12) is

$$Fc = \frac{1120}{32.16}(2445 + 31) = 86230 \text{ ft.-lb.}$$

The efficiency of the nozzles and blades is

$$E = 86230 \Big/ \frac{2824^2}{2 \times 32.16} = 0.99 \text{ or } 99\%$$

The estimated steam consumption from equation 16 is

$$W.R. = \frac{1980000}{86230 \times (1. - 0.39)} = 38. \text{ lb. per brake horsepower-hour.}$$

The height of the blades using the exit diameter of nozzle 0.64", calculated in the previous problem, may be made 1.0". The width of the blades may be made ½". The pitch of blades may be made approximately ¾ of the width or ⅜" on the pitch line of wheel. The speed of wheel may be taken from Table 2 or approximately 13000 r.p.m. The pitch diameter of wheel is therefore equal to

$$D = \frac{1120 \times 60}{\pi \times 13000} = 1.645 \text{ ft. or } 19\tfrac{3}{4}".$$

IMPULSE TURBINE WITH VELOCITY STAGES

The single stage wheel, owing to the stresses produced in the blades due to the high rotative speed necessary, limits their height and consequently the area for the passage of steam. The maximum capacity of a single wheel due to this limitation is approximately 700 hp.

If the capacity of the turbine is to be increased it is therefore necessary to increase the number of velocity stages. By means of multi-stages the speed may be sufficiently reduced to permit the use of the longer buckets required to pass the larger volume of steam necessary to develop the greater horsepower. This may be accomplished in several ways.

(*a*) The expansion may all take place in a single set of nozzles (single pressure stage), with several sets of wheels with stationary guide vanes between the wheels, as shown in Fig. 15. The *Alberger* turbine (Fig. 16) and *Terry* turbine (Fig. 17) belong to this class.

(*b*) The pressure may be divided among several sets of nozzles, one set for each stage, each pressure stage having two or more velocity stages as in the *Curtis* turbine (Fig. 18).

(*c*) Multi-pressure stage with one velocity stage (one wheel) for each pressure stage as in the *Rateau* turbine (Fig. 19).

Impulse turbines with a plurality of pressure stages (*b* or *c*) have received the name *multi-cellular*.

Velocity compounding or staging permits of a reduction in wheel speed so that electric generators may be direct connected to the shaft, thus avoiding the use of reduction gearing necessary when single stage machines are used for this purpose.

Single Pressure—Three-Velocity Stage Impulse Turbine. In this type the entire expansion takes place in one set of nozzles as in the single stage *De Laval* turbine. The steam leaving the blades is re-directed upon the following set of blades by means of guide vanes, as shown by Fig. 20.

Energy Loss in Blades and Guide Vane Passages. A loss of kinetic energy occurs both in the blades and guide vanes due to the frictional resistance offered to the passage of the steam.

Let w_i = velocity at inlet to blades relative to the blade or the absolute velocity at inlet to guide vanes.

w_o = velocity at outlet of blades relative to the blade or absolute velocity of outlet from guide vanes.

ψ_2 = fractional part of energy lost by friction in blades and guides.

$\frac{w_o^2}{2g}$ = kinetic energy per lb. steam leaving wheel or guides.

FIG. 15. SINGLE PRESSURE STAGE—TWO VELOCITY STAGES.

Then
$$\frac{w_i^2}{2g} \times (1.0 - \psi_2) = \frac{w_o^2}{2g}$$

$$\therefore w_o = w_i \sqrt{1.0 - \psi_2} \quad . \quad . \quad . \quad . \quad . \quad . \quad . \quad . \quad . \quad . \quad . \quad (17)$$

An energy loss of 10% ($\psi_2 = 0.10$) in both blades and guides is frequently assumed in tentative designs for two or more velocity stages. This loss is a function of the velocity and is therefore not a constant. Several formulæ have been proposed by which this loss may be estimated, one of which is given by Figs. 13 and 14, and may be used in this connection.

Example. Construct the velocity diagrams for a single-pressure three-velocity stage turbine to be operated under the following conditions: Initial pressure, 150 lb. gage ($p_1 = 164.7$) steam dry saturated, terminal pressure 28″ vacuum ($p_2 = 1.0$). Speed of wheels, 3500 r.p.m. Pitch line diameter of all wheels 3′ − 0″. Peripheral velocity $c = 550$ ft. per sec. Assume $\psi_1 = 15\%$ for nozzle and $\psi_2 = 10\%$ for each wheel and each set of guide vanes. From the *Mollier* chart $i_1 - i_2 = 326$ B.t.u.,

theoretical nozzle exit velocity $w_e = 4040$ ft. per sec., $w_1 = \sqrt{1.0 - 0.15} \times 4040 = 3717$ ft. per sec. estimated actual exit velocity.

Referring to Fig. 20 the velocity diagrams shown and the figures given in most cases were obtained by simply scaling the diagrams and are therefore subject to slight corrections which may be

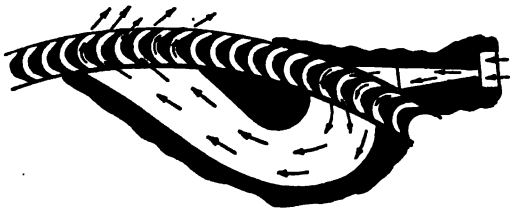

FIG. 16. ALBERGER TWO-STAGE TURBINE.

obviated by solving the triangles as was done in the previous problem. The exit angle of the guide vanes in each case was made equal to the blade angle of the preceding wheel.

The total energy absorbed by the three wheels per lb. of steam supplied is given on the figure and is 174,320 ft.-lb.

Allowing a loss due to windage, leakage and mechanical friction of $\psi_3 = 20\%$, the steam per brake horse-power hour will be

$$W.R. = \frac{1{,}980{,}000}{0.80 \times 174{,}320} = 14.2 \text{ lb.}$$

Few Pressure Stages with Several Velocity Stages for Each Pressure Stage. The *Curtis* turbine in the larger sizes is built with four pressure stages, each pressure stage having two velocity

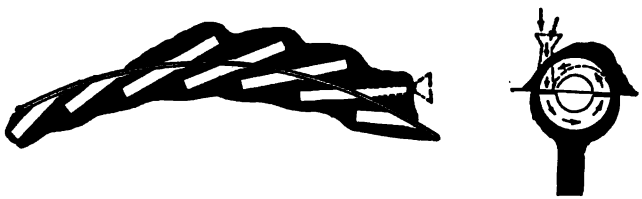

FIG. 17. ARRANGEMENT OF BUCKETS AND REVERSING CHAMBER TERRY TURBINE.

stages. The smaller sizes are constructed with only two pressure stages, each pressure stage having two velocity stages. One of these machines is shown in section by Figs. 21 and 22.

If the heat drops $(i_1 - i_2)$ for each pressure stage are made equal, then the velocities of the steam entering the first wheel of each stage will be the same, and if the blade angles of the wheels for each pressure stage are alike the energy absorbed by the wheels for each pressure stage will be equal.

The action of the steam is conveniently studied in connection with a *Mollier* diagram. Referring to Fig. 23, let the initial state of the steam entering the first stage p_1 be indicated by point A on the diagram. Under ideal conditions, if the kinetic energy of the steam was all absorbed by the turbine and the terminal pressure was p_4 then point D would represent the final condition. The length A–D would then represent the energy absorbed and work done. If A–D be divided into several equal parts as AB, BC and CD then the heat drops are equal and the initial pressures for each stage as p_2 and p_3 are known.

In the actual turbine, however, the wheel or wheels of each stage do not extract all of the available energy, as represented by the lengths AB, BC and CD, as there remains in each case the absolute velocity of exit from the blades which carries away $\frac{w^2}{2g}$ ft.-lb. of work per lb. of steam

supplied, and in addition there is the loss due to friction. Let AB' represent the heat available for the first pressure stage.

If the length of the segment AF represents the heat equivalent of the energy absorbed by the first stage as determined from the velocity diagrams then the length FB' represents the heat equivalent of the loss for the first pressure stage.

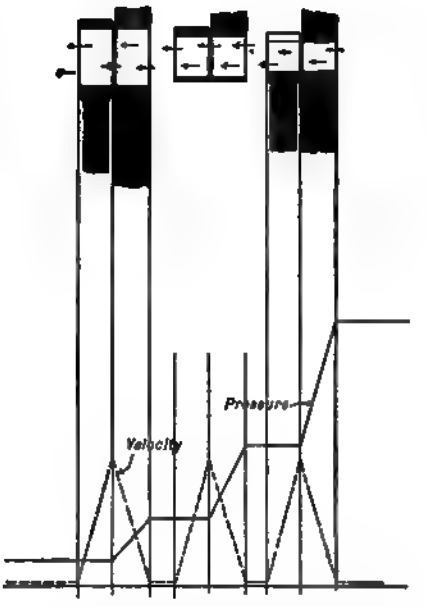

FIG. 18. CURTIS TURBINE—FEW PRESSURE STAGES—TWO VELOCITY STAGES FOR EACH PRESSURE STAGE.

FIG. 19. RATEAU TURBINE—MULTIPLE-PRESSURE STAGES—SINGLE-VELOCITY STAGE.

This heat, except for a small fraction that is radiated, is expended in raising the quality of the steam (or superheating it). The quality (or superheat) at the end of the first stage will therefore be found by drawing the horizontal line FE to the intersection with the initial pressure line p_2 for the second stage. This point (E) represents the initial condition as to pressure p_2 and quality of the steam for the expansion nozzles or vanes for the second stage.

The heat equivalent of the work absorbed by the second-stage wheels is now laid off on the vertical as EH; pass horizontally to the right to the intersection with the initial pressure line p_2 for the third stage, the condition being represented by the point I. Owing to the fact that the

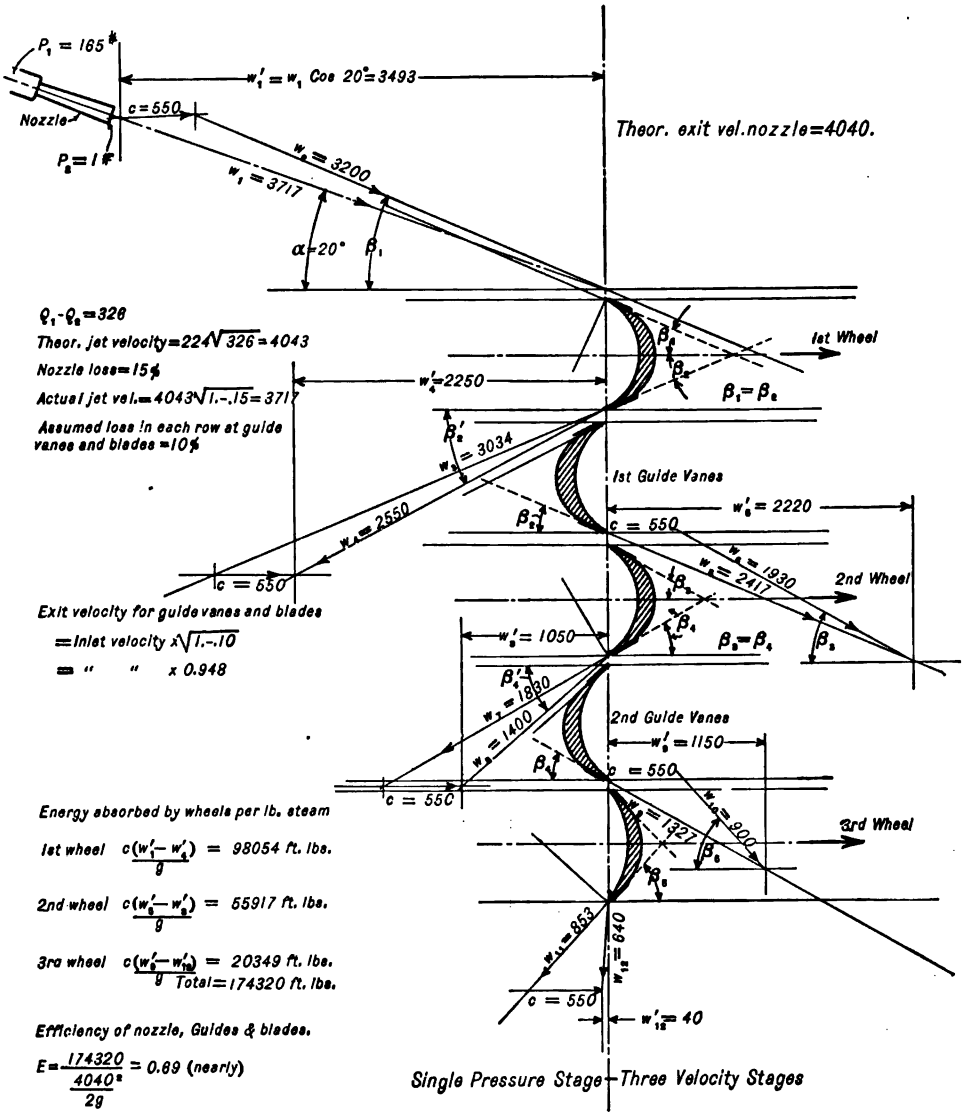

FIG. 20. VELOCITY DIAGRAMS FOR A SINGLE-PRESSURE, THREE-VELOCITY STAGE TURBINE.

pressure lines are not parallel but slightly diverging, equal heat drops for each stage will not result by using the pressures for the several stages as determined by dividing the total heat drop $(i_1 - i_2)$, line AD, into equal parts.

Reheat Factor. The heat drop per stage, however, which will accomplish this result ap-

FIG. 21. CURTIS TWO-STAGE TURBINE—TWO PRESSURE STAGES WITH TWO VELOCITY STAGES FOR EACH PRESSURE STAGE.

FIG. 22. DETAIL OF CURTIS TWO-STAGE TURBINE.

proximately is determined by multiplying the theoretical heat drop ($i_1 - i_2 = i_2 - i_3 = i_3 - i_4$, etc.) per stage, as determined by dividing the line AD into a number of equal parts corresponding

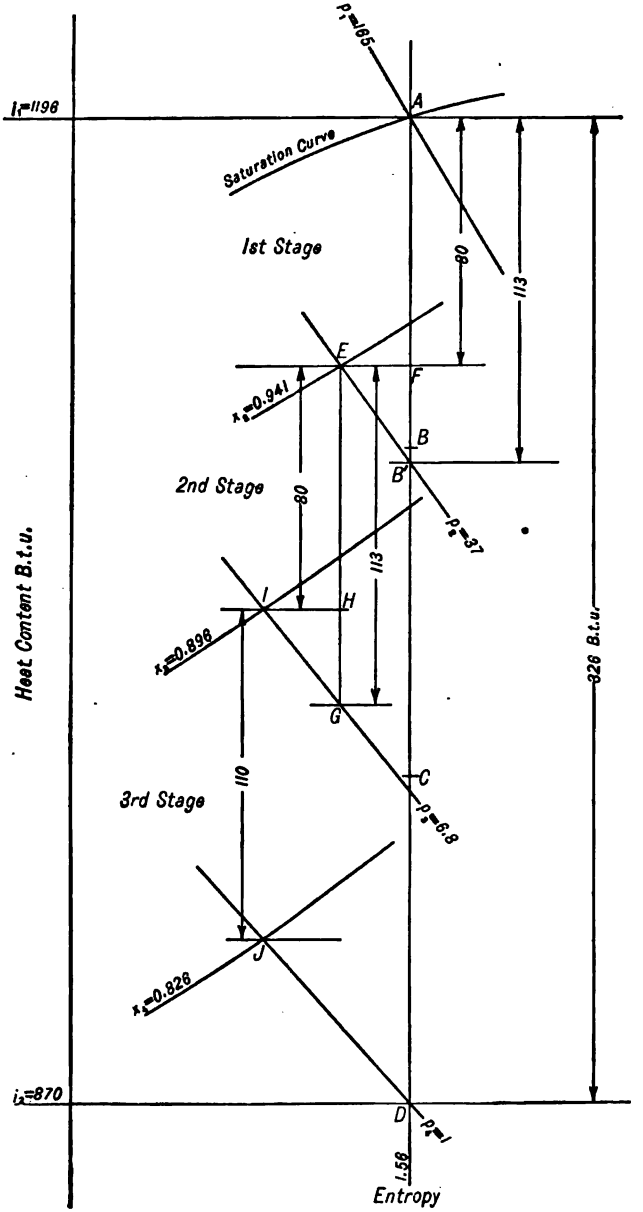

FIG. 23. HEAT DROPS CURTIS TURBINE.

to the number of stages to be employed by a factor $1 + K$. The value of K is found by the empirical formula following (*F. E. Cardullo, Trans. A. S. M. E.*, 1911):

$$K = 0.00056 \left(\frac{n-1}{n}\right) \Delta H (1. - E)$$

ΔH = total available heat drop $(i_1 - i_4)$

n = number of stages.

E = probable internal efficiency of each stage (about 60 to 70%).

Example. Let it be required to lay out the blading for a Curtis type turbine having three pressure stages, each pressure stage to have two velocity stages. Initial pressure p_1 = 165 lb. absolute, terminal

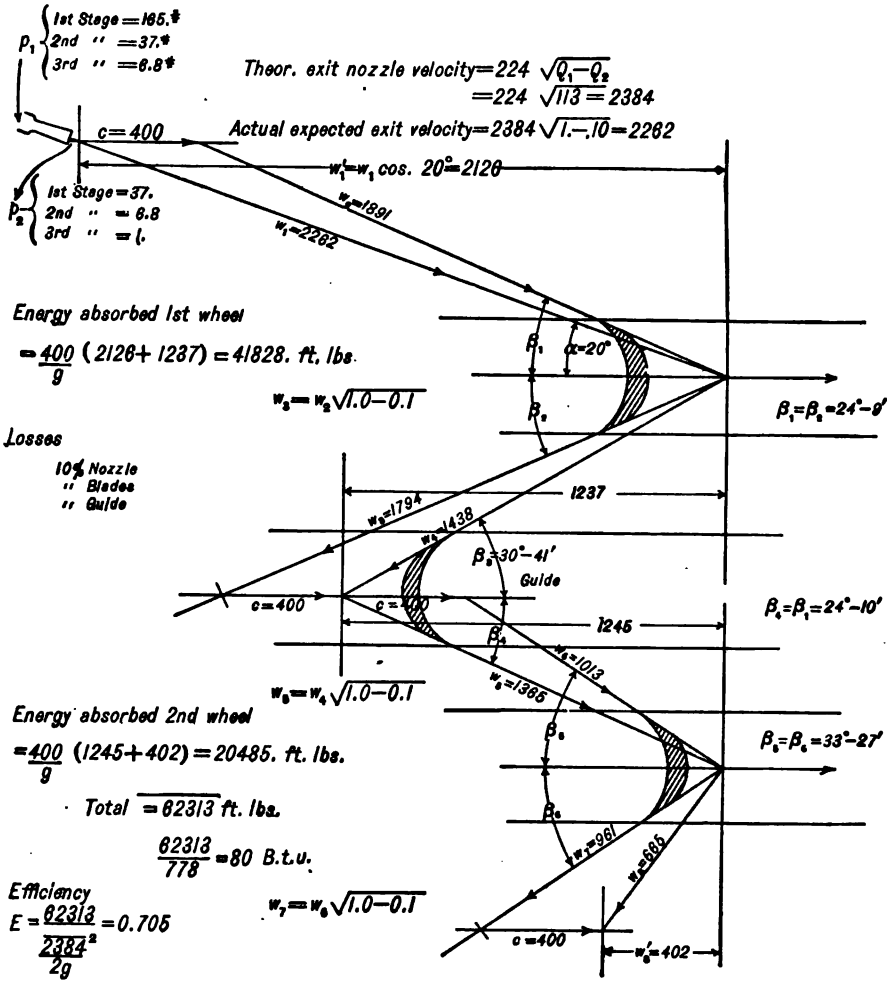

FIG. 24. VELOCITY DIAGRAM FOR EACH PRESSURE STAGE OF A CURTIS TYPE TURBINE.

pressure p_4 = 1 lb. Total heat drop $i_1 - i_4$ = 326 B.t.u. Peripheral velocity of wheels c = 400 ft. per sec.

$$K = 0.00056 \left(\frac{3-1}{3}\right) \times 326 \times (1 - 0.70) = 0.04 \text{ nearly.}$$

Reheat factor $1 + K = 1.04$. The theoretical heat drop per stage is $\frac{326}{3} = 109$ B.t.u. The

heat drop per stage which must be used to obtain an approximate equal division of work in each stage will be

$$109 \times 1.04 = 113.4 \text{ B.t.u.}$$

Theoretical nozzle exit velocity for each stage nozzle $w_s = 224\sqrt{113} = 2382$ ft. per sec. Expected velocity $w_1 = 2382 \times \sqrt{1. - 0.10} = 2264$ ft. per sec. The expected heat drop per stage is, $113.4 \times 0.70 = 80$ B.t.u. (nearly). This is the energy absorbed by the wheels of each stage. The loss of energy in each guide vane and each blade is assumed as, $\psi_2 = 10\%$.

The velocity diagram for each stage is shown by Fig. 24. The exit angle β_4 of the guide vane in the construction shown is equal to the blade angle $\beta_1 = \beta_2$ of the preceding wheel. The pressures and qualities for the 2nd and 3rd stage as determined by means of the *Mollier* diagram as previously explained (Fig. 23), are $p_2 = 37$, $x_2 = 94.1\%$, $p_3 = 6.8$, $x_3 = 89.6\%$, $p_4 = 1$.

The nozzle calculations are similar to the example given for the single-stage turbine.

The total energy absorbed by the wheels per lb. of steam, assuming a blade and guide vane loss $\psi_2 = 10\%$, is 3×62313 ft.-lb.

Assuming a loss of 20% for windage and mechanical friction, the estimated water rate is

$$W.R. = \frac{1{,}980{,}000}{0.80 \times 3 \times 62{,}313} = 13.3 \text{ lb. per hour.}$$

IMPULSE-REACTION TURBINES

A pure reaction turbine is one in which the energy is derived from the reaction due to the expansion of steam in nozzles or blades attached to the wheel or rotor.

No pure reaction turbine is now on the market. A combination of the impulse and reaction principles, however, is employed by one of the most important types of turbine thus far developed.

Fig. 25 shows the sectional elevation of a *Westinghouse-Parsons* single flow turbine employing a combination of the impulse and reaction principles. In this type of machine no nozzles are employed, the expansion of the steam taking place in each set of stationary guide vanes and moving blade passages, steam being admitted around the entire periphery of the rotor.

The steam is admitted to the turbine through a poppet valve actuated by a governor.

Owing to the large number of rows of blades and guide vanes employed the heat drop per row is comparatively small with the result that the steam velocity is also low, the steam velocity varying from 150 to 600 ft. per sec.

The complete expansion of the steam is carried out in the annular compartment, formed by the blades and guide vanes, which resembles in effect a divergent nozzle.

The impulse-reaction turbine allows the lowest velocities of rotor accompanied by high economy that have been attained.

The absolute velocity of the steam as it leaves the guide vanes varies progressively in passing through the turbine. The exit angles are made the same for both guide vanes and moving blades, ordinarily between 20° and 30°.

When the absolute velocity of the steam leaving the guide vanes would rise above 2 to 3½ times the peripheral velocity c, the diameter of the rotor is increased. The following table gives some particulars as to speeds and number of rows of blades used in the *Parsons* turbine. (*E. M. Speakman.*)

The action of the steam in a turbine of this type is shown by Figs. 26 and 27. A common ratio of peripheral speed to the absolute velocity of the steam leaving the guide vane is approximately $\frac{C}{w_1} = 0.60$. Having selected the peripheral speed from Table 4 for the first stage it is necessary to select the exit angle α (20° to 30°) and construct or compute the entrance angle β for the blades. The heat drop per row and stage may then be calculated.

A typical arrangement for the rotor in this type of machine is shown by Fig. 26, the rotor being divided into three cylinders.

Fig. 25. Standard Type Westinghouse-Parsons Turbine.

TABLE 4

VARIOUS VANE SPEEDS

Normal Output of Turbine	Peripheral Vane Speed		Number of Rows	Revolutions per Minute
	First Expansion	Last Expansion		
5000 kw	185	330	70	750
3500 kw	188	280	76	1200
2500 kw	125	300	84	1360
1500 kw	125	260	72	1500
1000 kw	125	250	80	1800
750 kw	125	260	77	2000
500 kw	120	235	60	3000
250 kw	100	210	72	3000
75 kw	100	200	48	4000

A group of blades having the same heights is termed a barrel, so that the typical arrangement is three cylinders with three barrels to each cylinder. The increasing height of blades being due

FIG. 26. WESTINGHOUSE-PARSONS TURBINE—MULTI-PRESSURE—MULTI-VELOCITY STAGE.

to the increase in the volume of steam as the pressure decreases. The diameters of the cylinders increase in order to prevent excessive blade height which would otherwise be necessary to provide sufficient area to pass the large volume of steam at the lower pressures.

Example. Let it be required to determine the number of rows of blades for an impulse-reaction turbine to be operated under the following conditions: $p_1 = 165$ lb. absolute, $p_2 = 1$ lb. absolute, total heat drop $i_1 - i_2 = 326$ B.t.u. Rotor to be composed of three cylinders, speed from Table 4. 1st cylinder (small) $c = 135$ ft. per sec.; 2nd cylinder (intermediate) $c = 220$ ft. per sec.; 3rd cylinder (large) $c = 330$ ft. per sec. Exit angle of guide vanes and blades $\alpha = 22\frac{1}{2}°$. Ratio of peripheral speed to steam speed 0.60 or $w_1 = \frac{c}{0.60}$.

For the first cylinder $w_1 = \frac{135}{0.60} = 225$ ft. per sec.

As expansion also takes place in the blades, as well as in the guide vanes, the exit velocity from the blades w_2, relative to the blades, may be made equal to the absolute exit velocity w_1 from

FIG. 27. ACTION OF THE STEAM IN THE PARSONS TURBINE.
c = Blade velocity at mean diameter. w = Steam speed due to expansion between A and B (absolute velocity).

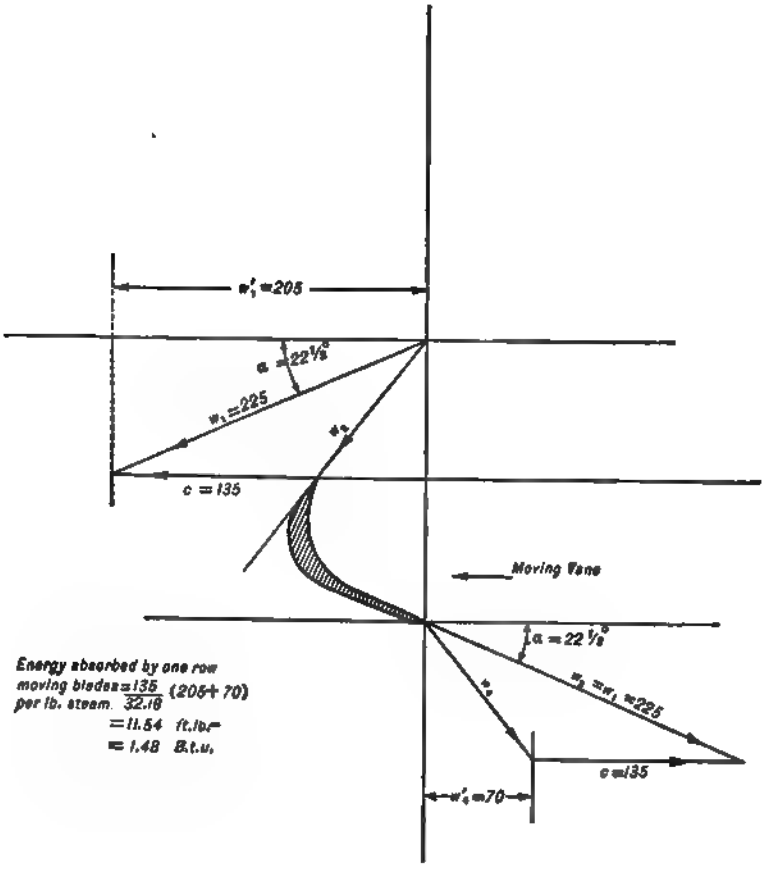

FIG. 28. VELOCITY DIAGRAM FOR IMPULSE-REACTION TURBINE.

the guide vanes, or $w_2 = w_1$. Constructing the velocity diagram, Fig. 28, we find $w'_3 = 205$ and $w'_4 = 70$.

The energy absorbed by one row of blades or one stage is: $\frac{135}{32.16}(205 + 70) = 11.54$ ft.-lb.

The heat drop per stage is 11.54/778 or 1.48 B.t.u. Owing to the loss by friction and leakage the actual heat drop will be greater per stage than the theoretical.

If this loss is assumed as 25% then the actual heat drop per stage for the first cylinder is $\frac{1.48}{1 - 0.25} = 2.00$ B.t.u. (nearly). If all the stages were on the small cylinder of the rotor there would be required 326/2 = 163 stages. If the rotor be divided into three cylinders and approximately equal work is to be performed by each cylinder, the number of stages for the first cylinder is 163/3 = 54 +. The number of stages for the intermediate and large cylinder may be determined in a similar manner.

In *Westinghouse* turbines for small powers the moving wheel, or rotor, is a steel casting, with blades inserted in a groove cut in the periphery of the wheel, and held in place by double or triple rivets in each blade, according to size and speed. The cast-iron cylinder is split horizontally, a section through the bottom half of a turbine cylinder being shown diagrammatically in Fig. 29.

Steam enters the turbine at *A*, through a valve of the double-seated poppet type; passing the first stage nozzles *B*, it impinges on the moving blades, giving up part of its energy, thence passes

Steam Inlet

FIG. 29. WESTINGHOUSE—TWO-STAGE IMPULSE TURBINE.

to the first reversing chamber *C*, where its direction is changed and it is made to pass again through the moving blades, giving up the balance of the energy imparted by the first stage nozzles. The steam then passes through the second stage nozzles *D* and the second stage reversing chamber *E*, where the cycle above described is repeated, finally leaving the turbine through the exhaust pipe *F*.

Turbines of 50 hp. or less have but one set of nozzles and one reversing chamber; all others have two stages. The nozzle blocks and reversing chambers are made of bronze and finished by hand to insure the minimum of friction losses due to steam passing over these surfaces.

Two general types of governor are employed. For turbines driving centrifugal pumps, fans and the like, where exceedingly sensitive regulation is not required, a shaft governor is used. On the larger machines for electric drive, a governor of the flyball type, driven from the turbine shaft by bevel gears, is used. With all turbines an automatic safety stop is provided, which shuts off steam in case of overspeed.

The following classes of turbines are manufactured by the *De Laval Steam Turbine Co.:*

Class "A" Single-stage Impulse Turbine, ranging in capacity from 7 to 600 horsepower, consists of a single set of nozzles discharging steam upon buckets of a single high-speed wheel,

FIG. 30. DE LAVAL MULTI-CELLULAR TURBINE.

the power being transmitted to the driven machine by means of helical reduction gears (Fig. 10).

Class "B" Single-stage Impulse Turbine, ranging in capacity from 5 to 150 horsepower, is designed for driving extra high-speed machinery without the intermediation of gears.

Class "C" Velocity-stage Impulse Turbine, ranging in capacity from 1 to 600 horsepower, contains a single set of nozzles in which the steam is expanded from the initial to the terminal

pressures. From these nozzles the steam is discharged against a row of moving buckets and is then redirected by stationary guide vanes upon a second set of moving buckets. In some cases a second set of stationary guide vanes and a third set of moving buckets are employed. The Class "C" Turbine is peculiarly fitted to operate with high-pressure steam exhausting to atmosphere or

FIG. 31. DIMENSION DRAWING OF STURTEVANT TURBINE.

TABLE 5

DIMENSIONS OF STURTEVANT STEAM TURBINES

Size	Pipes (Max.) Steam	Pipes (Max.) Exhaust	A	B	C	D	E	F	G	H	I	J	K	L	M	N	O	P	Q	R	Found'n Bolts
A-5.....	1½	4	30¾	22 1/16	23¼	10¾	19⅝	10 9/16	10 3/16	12	4½	3½	12⅛	9/16	18⅝	8 3/16	1½	4	4	18⅝	⅝
B-5.....	2	6	34	28⅞	30⅝	13¼	26⅝	13 11/16	13 11/16	15⅜	5½	4⅜	14⅛	⅝	19½	11 7/16	1½	5⅛	5⅛	15½	¾
C-5.....	2½	8	46⅛	36¾	38½	16½	34¼	17½	17½	19⅜	6¾	5⅛	18¾	11/16	28½	14⅝	2	6½	6½	22 9/16	1
D-5.....	3½	8	55⅝	43½	45½	18⅝	41	20⅞	20⅞	22¾	6¾	5 31/32	23¼	9/16	32⅜	18	2½	7 7/16	7 7/16	24	1
E-5.....	4	10	59⅝	49⅜	50⅝	18¾	46¾	23¾	23¾	25¾	8	6 1/16	25½	⅝	34½	20⅛	2½	7½	7½	24¼	1

NOTE.—All dimensions are in inches.

TABLE 6

DIMENSIONS AND WEIGHT OF PARSONS TYPE TURBINES CONDENSING

Kw.	R. P. M.	Length	Width	Height	Weight, Lb.
60 Cycles 2 or 3 Phase. Not over 6600 Volts.					
300	3,600	23 ft. 4 in.	4 ft. 0 in.	5 ft. 1 in.	36,500
500	3,600	24 ft. 6 in.	4 ft. 0 in.	5 ft. 1 in.	40,000
750	1,800	27 ft. 0 in.	5 ft. 10 in.	5 ft. 9 in.	65,200
1,000	1,800	29 ft. 0 in.	6 ft. 10 in.	6 ft. 6 in.	81,500
1,500	1,800	31 ft. 10 in.	6 ft. 10 in.	6 ft. 6 in.	108,000
2,000	1,200	34 ft. 9 in.	9 ft. 2 in.	8 ft. 2 in.	138,000
3,500	900	35 ft. 9 in.	10 ft. 5 in.	9 ft. 4 in.	237,000
5,500	720	46 ft. 0 in.	11 ft. 4 in.	10 ft. 6 in.	417,000
25 Cycles 2 or 3 Phase. Not over 6600 Volts.					
300	1,500	23 ft. 6 in.	6 ft. 4 in.	5 ft. 9 in.	51,000
500	1,500	24 ft. 6 in.	6 ft. 4 in.	5 ft. 9 in.	56,600
750	1,500	28 ft. 3 in.	6 ft. 4 in.	6 ft. 0 in.	75,500
1,000	1,500	29 ft. 9 in.	7 ft. 6 in.	6 ft. 9 in.	104,200
1,500	1,500	32 ft. 6 in.	7 ft. 6 in.	7 ft. 0 in.	131,000
2,000	1,500	38 ft. 0 in.	9 ft. 0 in.	8 ft. 0 in.	166,000
3,500	750	42 ft. 5 in.	11 ft. 8 in.	10 ft. 5 in.	356,000
5,500	750	46 ft. 10 in.	13 ft. 2 in.	11 ft. 6 in.	460,000
7,500	750	50 ft. 10 in.	13 ft. 3 in.	11 ft. 6 in.	511,000

against back-pressure or with low-pressure steam exhausting to condenser, or for use as a mixed-flow turbine. It is designed for direct connection to centrifugal pumps and blowers, small alternating or direct-current generators, centrifugal air compressors and other moderate or high-speed machinery. It is also used with gears for belt or rope drives or for driving shafting or slow-speed machinery.

FIG. 33. KERR MULTI-CELLULAR TYPE TURBINE.

Class " D " Pressure-stage Impulse or Multicellular Turbines (Fig. 30), ranging in capacity from 50 to 15,000 hp., consist of a series of single-stage wheels, each enclosed in a separate cell or compartment and all mounted upon a common shaft. This turbine is directly connected without

FIG. 38. ALLEDGER TURBINE.

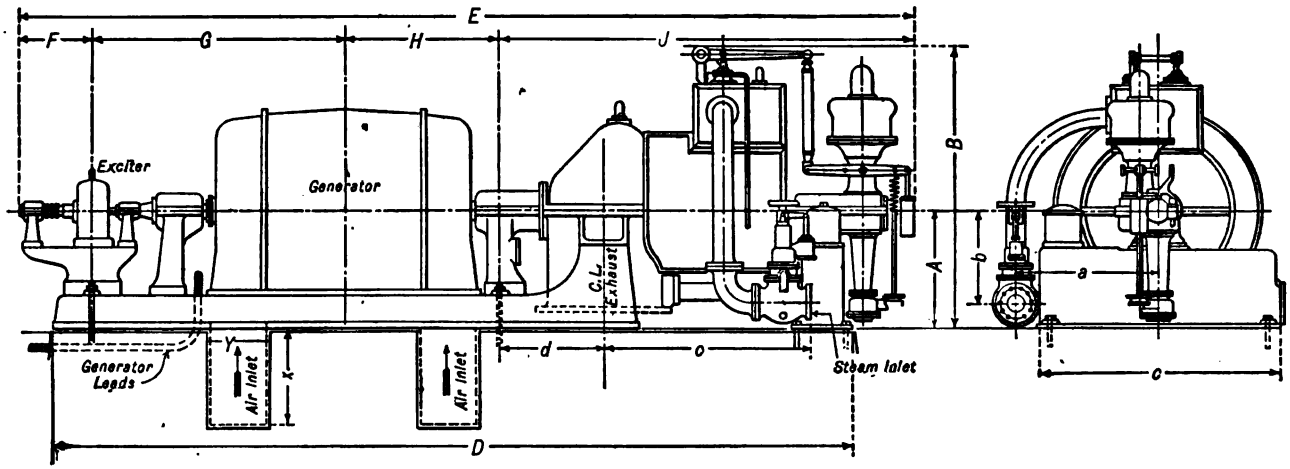

FIG. 34. WESTINGHOUSE TURBINE—CONDENSING DIRECT-CONNECTED TO A. C. GENERATOR.

TABLE 7

Capacity	Dimensions																Exhaust	Size of Leblanc Condenser
	A	B	C	D	E	F	G	H	J	X	Y	Steam	a	b	c	d		
300 Kw	3'-4"	7'- 7"	5'-6 13/16"	15'-0"	16'- 0"	F + G =	4'- 8 1/2"	3'-1 1/2"	8'- 2 3/8"	.....	.....	3"	24"	.....	.....	.....	18" Diam.	No. 1
500 Kw	2 -9	7 - 3	4 -3	16 -4 1/4	19 - 2 7/8	2 -2 9/16	5 - 7 7/8	3 -2 13/16	8 - 3	26"	14 1/4"	4	3'-0"	21 1/2"	3'- 6 3/4"	21 3/4"	28 "	No. 4
800 Kw	3 -6	8 - 2	6 -0	18 -5 1/2	19 -11 5/8	F + G =	4 -11 15/16	3 -0 1/16	9 -10 7/8	29	17 1/2	5	3 -2	34	5 - 2	3'-3"	36 "	No. 7
1200 Kw	3 -6	8 -10 1/2	6 -9	23 -3 1/2	26 - 8	2 -2 9/16	7 - 4 9/16	4 -6 5/8	12 - 7	34	19 9/16	6	4 -2	32	5 -10 3/4	3 -0 3/4	Oval-38"x52"	No. 10
2000 Kw	4 -0	8 - 3	7 -0	25 -8 3/4	29 - 2 1/8	2 -5	7 -11 1/4	5 -1 5/8	13 - 8 3/4	44 1/4	21 5/16	8	4 -6	34	9- 4 1/4	4 -2 1/4	Oval-48 x72	No. 13

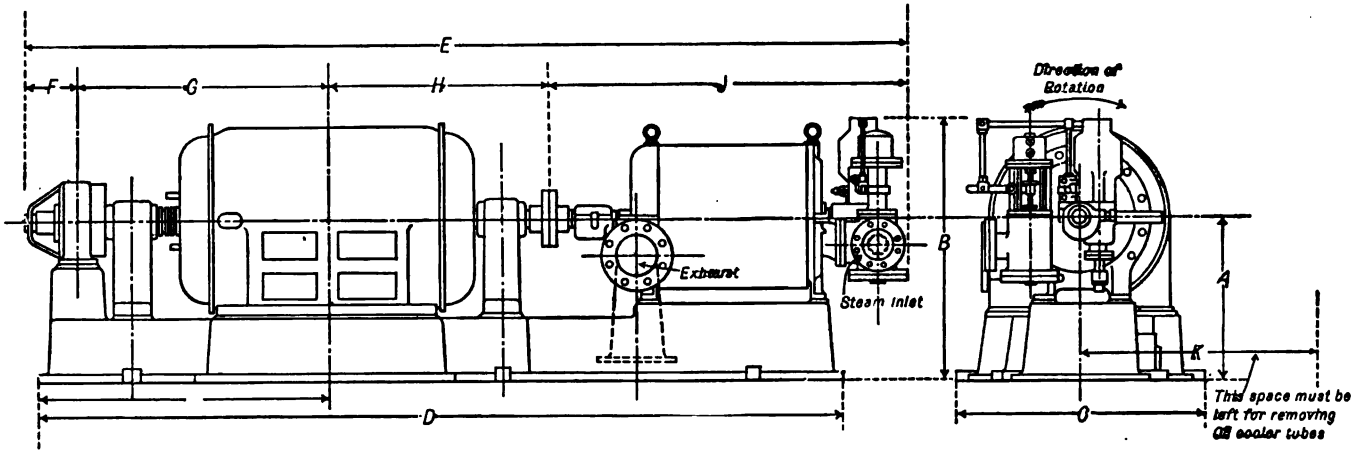

FIG. 35. KERR TURBINE.

TABLE 8

Capacity	Generator	Speed	Dimensions										Steam	Exhaust
			A	B	C	D	E	F	G	H	J	K		
62½ K. V. A....	3 Ph. 60 Cycle—2,300 Volts	3,600 R. P. M.	23½"	3'- 7¾"	2'-11½"	10'- 2¾"	11'- 3⅝"	10"	3'-3½"	2'-10¼	4 - 3½"	35⅝"	2½"	6" on top and on c.l.
125 K. V. A.....	3 Ph. 60 Cycle— 220 Volts	3,600 R. P. M.	32	4 - 3	3 - 6¾	11 - 2 1/16	12 - 5 5/16	10	3 -5½	3 -0¼	5 - 1 7/16	43	3	8 left-hand side
187½ K. V. A....	3 Ph. 60 Cycle—2,200 Volts	3,600 R. P. M.	32	4 - 1¾	3 - 6¾	13 - 1½	14 -10⅜	10	3 -0½	3 -4½	6 -10⅜	45	3	16 left-hand side
200 K. W.....	2 Ph. 60 Cycle— 220 Volts	3,600 R. P. M.	32	4 -10½	3 - 6¾	13 - 9½	16 - 5½	10	4 -0¼	3 - 7¾	7 -10½	45	4	18 left-hand side
250 K .V. A.....	3 Ph. 60 Cycle— 480 Volts	3,600 R. P. M.	32	4 - 1¾	3 - 6¾	13 -11¾	15 - 9¼	10	1 -0⅞	3 - 7¾	7 - 2⅝	45	4	16 left-hand side
250 K. V. A.....	2 Ph. 60 Cycle— 220 Volts	3,600 R. P. M.	32	4 - 2¾	3 - 6¾	12 -11 9/16	15 - 0 11/16	10	1 -0⅞	3 - 7¾	6 -10 7/16	43	4	16 left-hand side
625 K. V. A.....	3 Ph. 60 Cycle—2,300 Volts	3,600 R. P. M.	36	4 -10 9/16	4 - 3¾	17 - 8 9/16	18 -10	10	4 -5½	4 - 1 9/16	9 - 5¼	43	5	24 on bottom as indicated
750 K. W.....	3 Ph. 60 Cycle—4,400 Volts	3,600 R. P. M.	36	5 - 2½	5 -10¾	17 -10⅝	19 - 5 13/16	10	4 -3¼	4 - 0¼	10 - 3 13/16	45	5	24 on bottom as indicated

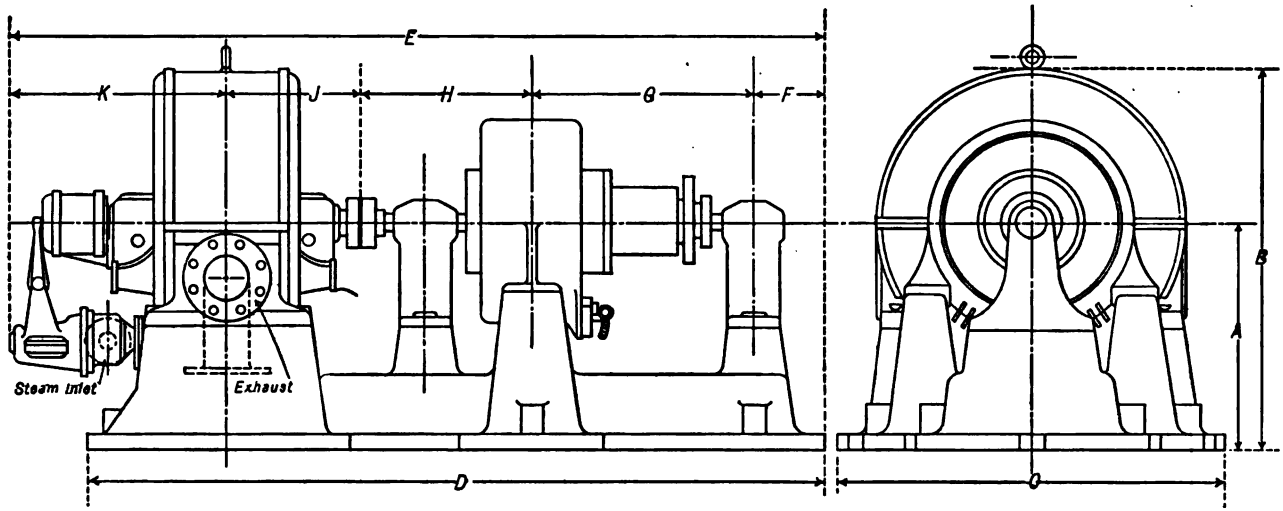

FIG. 36. TERRY TURBINE.

TABLE 9

Capacity	Dimensions										Steam	Exhaust
	A	B	C	D	E	F	G	H	J	K		
15 Kw.	28 1/2"	3'- 0 1/2"	2'- 5"	4'- 7 1/2"	6'- 7"	....	G+F=14 7/16"	16 1/4"	19 1/2"	28 3/4"	2"	4" right-hand side
50 Kw.	27 1/2	3 - 9 1/2	3 -10 1/2	7 - 6 7/16	8 - 3 3/4	8 1/2"	26 3/4	22	16 7/16	25 15/16	2	6 right-hand side
50 Kw.	3' - 0 1/8"	5 - 1 1/4	3 -11	8 -10 5/16	10 - 5 5/16	....	....	....	....	....	5	12 left-hand side
75 Kw.	....	5 - 3 9/16	4 - 8 1/4	....	10 -11 5/16	....	....	....	....	....	....	right-hand side
125 K.V.A.	30"	4 - 8 7/16	4 - 5 1/2	10 -10 5/8	12 - 0 1/2	20 1/4	31	3'- 0 3/4	25 1/4	31 1/16	3 1/2	12 on bottom as indicated
200 Kw.	34 1/4	4 -11 3/4	4 - 8 1/2	10 - 4 7/16	12 - 1 9/16	5 1/2	38 15/16	32 1/2	31 3/4	3'- 1	3 1/2	12 right-hand side
200 Kw. D.C.	....	4 -11 3/4	5 - 3 1/2	13 - 6 7/16	15 - 4 5/16	6 1/2	35 3/4	4 - 2 1/2	....	J+K=7‡	....	on bottom
*500 Kw. D.C.†	3' - 8"	6 -10	7 - 3 1/4	17 - 6	18 -10 1/2	16	4'- 4 1/2	5 -10 1/4	4'- 5 1/4	34 1/4	5 1/2	16 on bottom

* Turbine and generator bases separate. † Over-all of both. ‡ Reduction gear.

gears to high-speed machinery, such as alternators, compressors, high-speed centrifugal pumps and with gears to slow-speed machinery, such as direct-current generators, large centrifugal fans and pumps, heavy machinery and for rope or belt drive. Special small-wheel turbines are built for back-pressure service.

LOW-PRESSURE TURBINES

A low-pressure turbine is generally understood to mean a turbine designed to operate on exhaust steam at approximately atmospheric pressure.

The most general application of the low-pressure turbine is in connection with non-condensing engines, the exhaust from which being piped to a turbine, the latter operating condensing. Fig. 38.

The available energy in one pound of dry and saturated steam between the limits of 140 lb. per sq. in. absolute initial pressure and 16 lb. per sq. in. absolute terminal pressure corresponding

TABLE 10
DIMENSIONS OF CURTIS STEAM TURBINES

Rating kw.	Voltage	R.P.M.	Length	Weight, Pounds
15	85	4000	5′–6″	1850
25	125–250	3600	6′–0″	3600
75	125–250	2400	13′–0″	12000
150	125–250	2000	16′–0″	25500
300	125–250	1500	17′–0″	30000

to the range that may be used in a non-condensing engine, $i_{140} - i_{80} = 1194 - 1035 = 159$ B.t.u. The available energy in one pound of steam leaving the engine at 16 lb. pressure and a 28″ vacuum or 1 lb. absolute corresponding to the pressure range, as used in low-pressure turbine practice is: $i_{16} - i_1 = 1035 - 877 = 158$ B.t.u.

It is thus apparent that when condensing water is available the capacity of an existing non-condensing engine plant may be practically doubled by the addition of a low-pressure turbine unit, and the necessary auxiliaries, requiring no increase to the boiler plant or increase in the fuel consumption.

When condensing water may be obtained at the cost of pumping from a nearby supply this combination has proven in many cases a very profitable investment.

The diagram, Fig. 37, shows the performance of a *Rice-Sargent* engine coupled to a 1200-kw. direct-current 250-volt generator. The upper curve shows the relation of load to water rate non-condensing; the intermediate curve the same relation with 28″ vacuum; and the lowest curve the steam consumption at various loads of a combination of this engine with a low-pressure Curtis turbine. The curves show a net water rate of 16 lb. for the combination as against 22.6 lb. for the engine running condensing alone at 1200 kw. It also shows an increase of peak capacity of more than 1000 kw. due to the turbine, and finally, that, using the same amount of steam as is required to run the engine condensing at 1200 kw., an output of 1710 kw., that is, 42.5 per cent more, is secured. Looked at in another way, with a steam flow about 50 per cent greater than that required by the engine when running direct to the condenser, the combination of engine and turbine will give an increased output of about 100 per cent.

In non-condensing plants where there is a sufficient supply of exhaust steam at all times the straight low-pressure turbine fulfills all requirements. There are many plants, however, where the supply of exhaust steam is not constant or where it may be desired to secure more power than can be generated by low-pressure steam alone.

The method employed in this case is to cross-connect the live steam header with the pipe to the low-pressure turbine, the connection being equipped with an automatic reducing pressure valve.

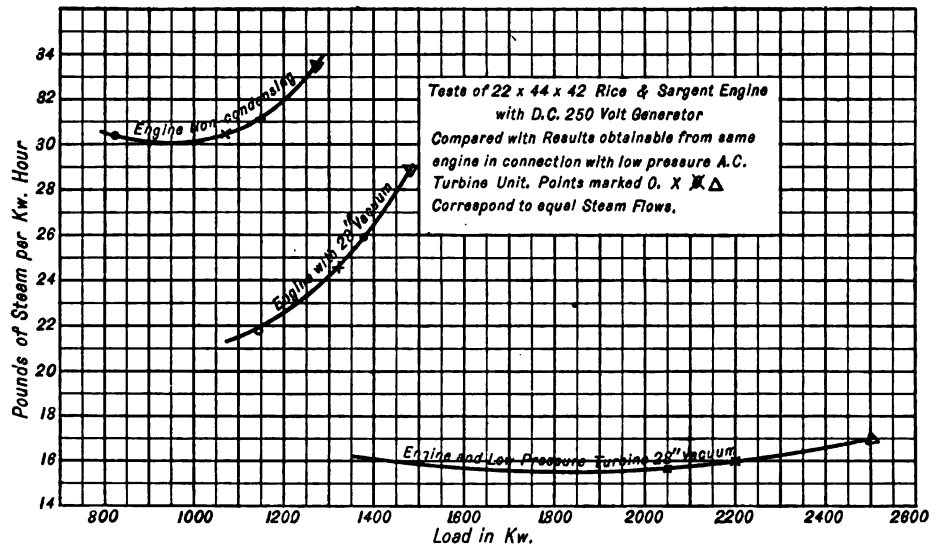

FIG. 37. PERFORMANCE CURVES.

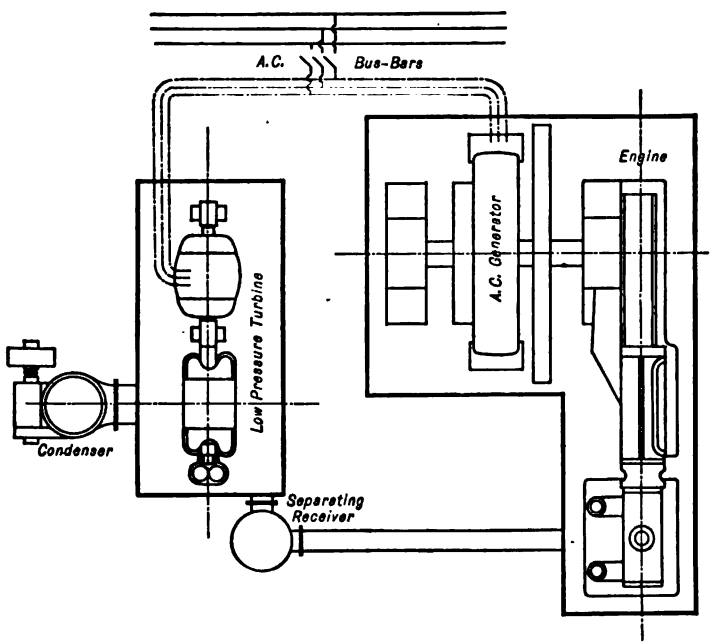

FIG. 38. NON-CONDENSING ENGINE AND CONDENSING LOW-PRESSURE TURBINE SET.

This valve is set to maintain a pressure on the delivery side slightly above atmosphere. It is replaced in many cases by a special valve operated by the turbine governor, when the speed falls below a predetermined limit.

The following classification of low pressure turbine installations is given by *Francis Hodgkinson* in a bulletin published by the *Westinghouse Machine Co.*, "The Application of Low-Pressure Turbines," in which a detailed discussion of the various cases enumerated below appears.

Case A. A low-pressure turbine taking steam from the exhaust of a reciprocating engine, the generators of each being connected to the same bus bars and no governing device used (Fig. 38).

Case B. A turbine or a number of turbines and engines connected similarly to Case A.

Case C. A low-pressure turbine operating in conjunction with one or more engines as in Cases A or B, except that the turbine and engine-driven generators are of different electrical

FIG. 39.

characteristics. A direct-current street railway generating plant, with alternating current distribution to distant substations, is a good example of this case, the turbine and engine-driven generators being tied together by rotary converters or motor generator sets. Another expedient by which the use of a governor could be eliminated is the connection of the turbine-driven alternator to bus bars upon which floats a synchronous motor belted or direct-connected to the reciprocating machine.

Case D. A low-pressure turbine operating on the steam exhausted by a number of engines, pumps, or other apparatus, without any relation between the electrical output from the turbine and the amount of steam available. In such a case a governor controlling the admission valve of the turbine is obviously necessary, as is a relief valve, permitting any excess of low-pressure steam to pass to the atmosphere (Fig. 39).

Case E. A low-pressure turbine operating on the exhaust from engines which are carrying an independent load, as in Case D. The turbine governor, however, controls a valve which connects the reciprocating engines with the condenser, imposing on them only enough back pressure to enable the turbine to carry its load. The engines thus have the benefit of some vacuum whenever the load on the turbine is light enough to require less than atmospheric inlet pressure.

Case F. A low-pressure turbine operating in conjunction with an engine driving a mill or a system of shafting, the output of the turbine being used for motors, lights, etc., and any excess of current generated over the electrical demand may be returned to the shafting by using a synochronous motor, coupled or belted to the line shaft, and thus acting as a balance to proportion the load between the two machines so that the best economy may be obtained (Fig. 40).

Case G. A low-pressure turbine receiving steam from an intermittently operating engine

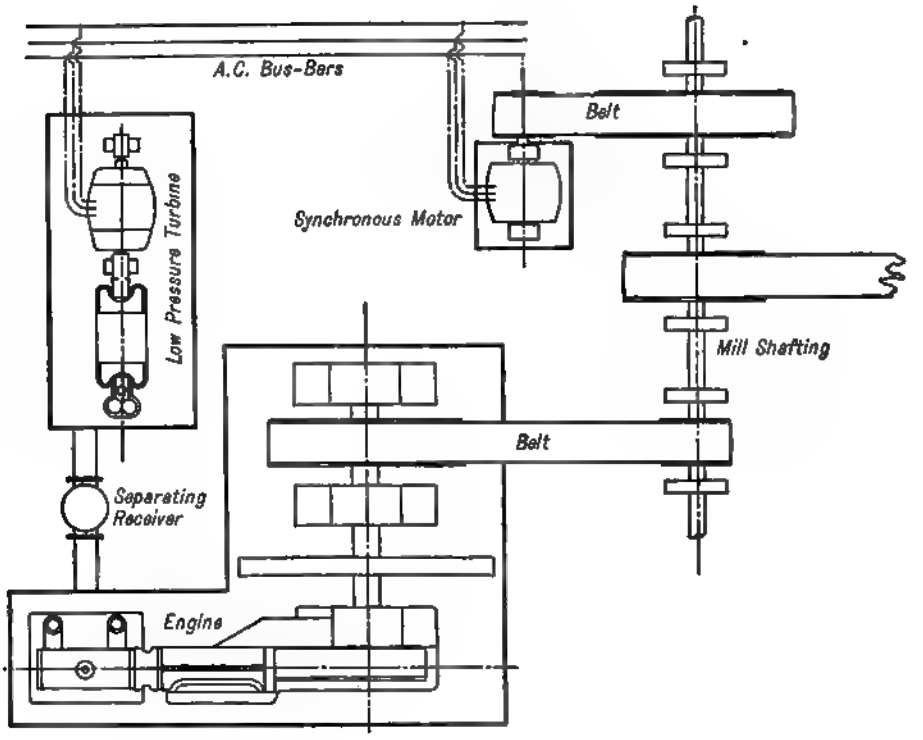

FIG. 40.

Exhaust from

FIG. 41. RATEAU MIXED-PRESSURE TURBINE.

such as a hoisting engine or a rolling mill drive. If the intervals in the steam supply are not too great, a regenerator may be employed, absorbing the excess supply of steam at one time to give it up again to the turbine when the latter demands an amount exceeding that passing from the engine.

Case H. Practically all turbines equipped with generators have a valve which will admit sufficient live steam to carry the normal load should the low-pressure supply fail. Such an arrangement does not, however, give high efficiency on high-pressure steam, since its expansive energy is wasted in throttling and only a small amount is recovered from the resultant superheat. Case H, therefore, provides what is termed a mixed-pressure turbine, which, in addition to the low-pressure section, is equipped with elements enabling it to expand steam from boiler pressure to that of the condenser. Such a turbine is so constructed that all the available low-pressure steam enters it at the proper point. A mixed-pressure turbine is, therefore, used where it gives better overall efficiency, although it has a poorer economy on low-pressure steam alone due to the dead load of the idle high-pressure element. The relative proportion of the high- and low-pressure elements will be determined by the amounts of steam of each class to be handled and the continuity with which they are supplied. Such a turbine must be equipped with a governor.

MIXED-PRESSURE TURBINE

In cases where the amount of power required is in excess of that which may be generated by the continuous supply of low-pressure steam there are several forms of machines available, designed to operate from two sources of steam. Machines of this type have been given the name "mixed pressure" (Figs. 41 and 42). To obtain the best results it is essential that the machine be designed for the conditions under which it is to operate. The following classification of the mixed-pressure turbine is given by *E. D. Dickson* in the " General Electric Review."

(1) Turbines designed to give the best economy on low-pressure steam and which are equipped with a special valve for admitting high-pressure steam to the low-pressure header automatically. This machine will not carry any load non-condensing, and will be very inefficient on high-pressure steam. It may be used where the condensing facilities are reliable, and when high-pressure may be considered an emergency condition.

(2) Turbines designed to give the best economy when operated low-pressure, and arranged to admit high-pressure steam through separate nozzles. This machine will give fairly good efficiency on high-pressure steam, will carry some load non-condensing, and some overload mixed pressure. It will carry its full rated load mixed pressure when there is insufficient low-pressure steam, or should the vacuum drop below that for which it was designed This class should be used where it is intended to operate a large proportion of the time on low-pressure, or in installations where the boilers will blow when the engine is shut down, or where there is liability of the vacuum occasionally dropping off. These machines will continue to use all the low-pressure steam available when operating mixed pressure.

(3) Turbines designed to give good efficiency at high pressure, and also arranged to carry load on low-pressure steam. Machines of this class should be used when it is intended to operate continuously, or nearly so, on mixed-pressure, and where there is a limited amount of low-pressure steam which would otherwise go to waste. In this machine the admission of high-pressure steam will decrease the quantity of low-pressure steam that will enter. This means that, should the machine have to operate mixed pressure on account of low vacuum, the amount of low-pressure steam will be automatically reduced and a greater amount of high-pressure steam will be required.

Such machines are a compromise between a low-pressure and a high-pressure turbine. If designed to carry full load when operating either way, they cannot be made to give an efficiency as high as that obtainable on turbines primarily built for either high- or low-pressure operation. These machines can be designed to give a good efficiency and carry full load high-pressure, or carry about half load low-pressure at fair efficiency.

In the mixed-pressure turbine, the speed governor will automatically open the low-pressure

valve with a decrease in speed, or a falling off in the supply of steam. By a special pressure actuated device, the low-pressure valve may be made to close and the high-pressure valves open automatically with decreasing supply of low-pressure steam.

In order to allow the engine and turbine unit to operate safely under all conditions, the *Nelson-Erwood* Swing Gate and Check Valve has been used extensively. This type of valve acts as a safety valve on any pipe line where it is necessary that the flow through the pipe shall be in

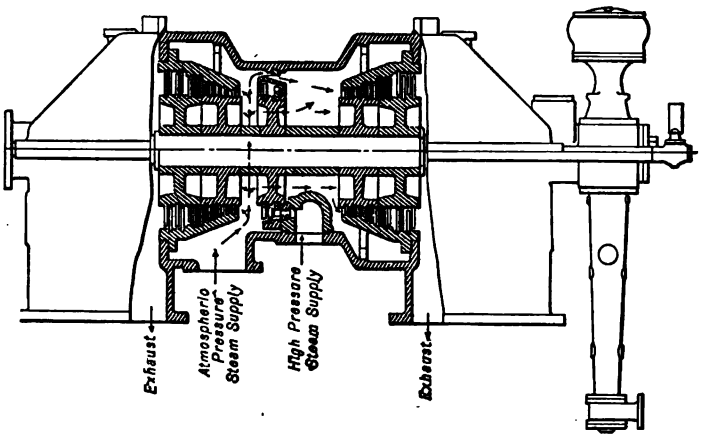

FIG. 42. WESTINGHOUSE DOUBLE-FLOW MIXED-PRESSURE TURBINE.

one direction and where disastrous effects would follow if the steam or condensate was allowed to flow into the engine or turbine in a direction contrary to that for which it was designed. The general arrangement of piping for a mixed turbine and engine plant is shown by Fig. 43.

When all the steam is used by the operating units, the steam flows from the boiler into the engine, then through the turbine and into the condenser. If there is not enough exhaust steam coming from the engine to operate the turbine unit, live steam may be admitted to it as shown, or if too much exhaust steam is flowing toward the turbine, a portion of it may be diverted to flow into the feed-water heater, and a proper amount of steam may be used from the engine exhaust to supply the heating system when conditions require. Such a combination of piping as shown makes for flexibility of operation under all conditions of service.

Under all these conditions of operation, the combined swing gate and check valves, when placed in their proper position on the pipe, operate normally as an ordinary stop valve; but, in addition, they protect the power plant should conditions change without the knowledge of the operator. For instance, if the engine is started, without opening the valve on the exhaust, the swing gate check valve will open automatically at a predetermined back-pressure on the engine and stay open until it is mechanically closed by means of the hand wheel attached to the valve stem as in an ordinary gate valve.

When the exhaust steam from the engine is used for the heating system, this swing gate and check valve is used on the atmospheric exhaust pipe as a back-pressure valve.

Several applications of mixed flow turbines are described and illustrated in the chapter on "Exhaust Steam Heating," Section I.

Regenerators. In combined engine and low-pressure turbine plants where the conditions of operation are such that the engines are intermittently shut down for very short periods, and where the load is a widely fluctuating one, as with mine hoists, rolling mills, etc., the installation of a regenerator between the engine and turbine unit (case previously mentioned), provides for a con-

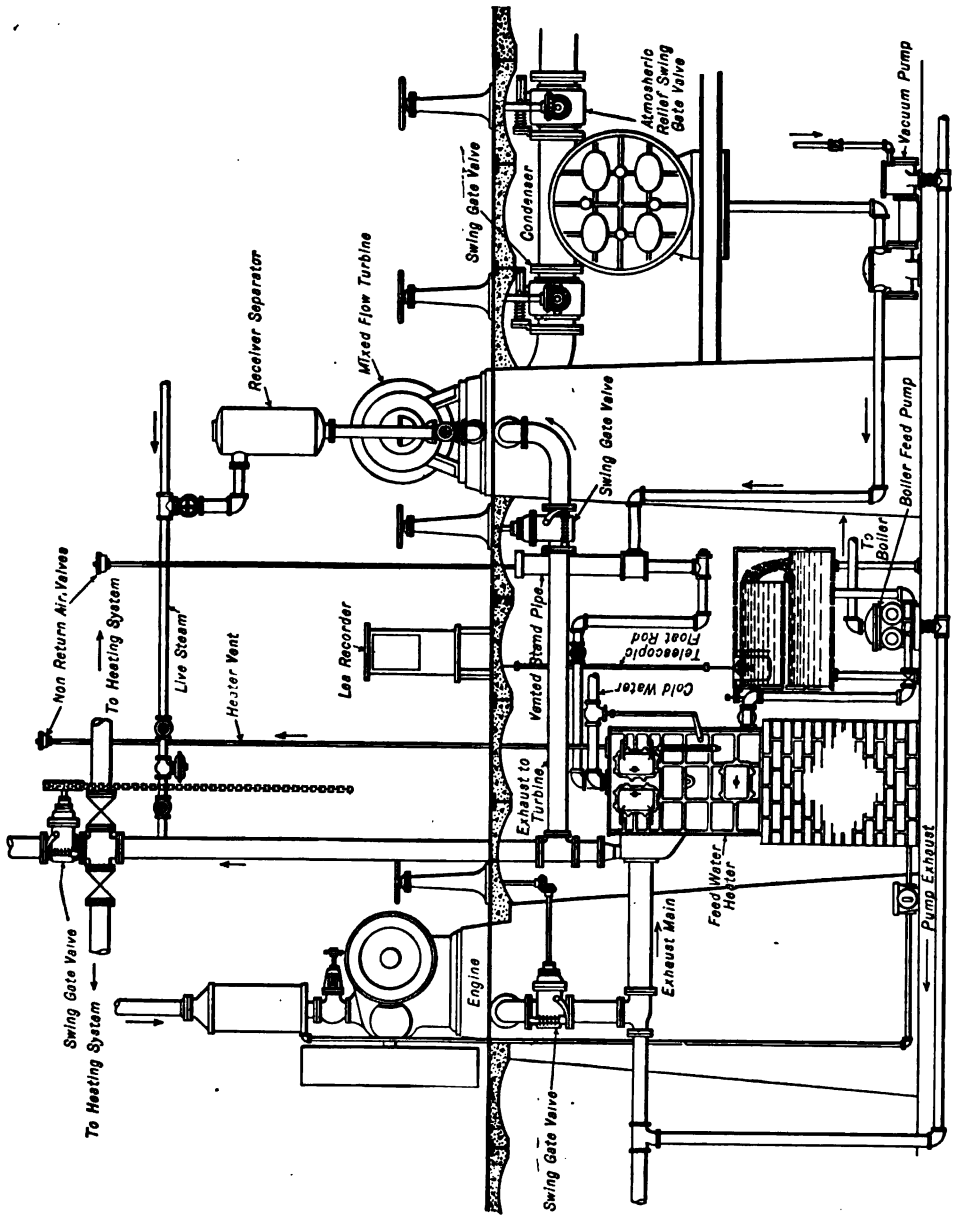

FIG. 43. PIPING ARRANGEMENT FOR A MIXED-PRESSURE TURBINE INSTALLATION.

tinuous supply of steam to the turbine, Fig. 44. A steam regenerator is simply a vessel containing a quantity of hot water arranged to present a large surface to the entering steam. The function of the regenerator is the same as that of any energy storage medium, namely, to absorb energy received more or less intermittently and to give it up steadily.

The action of the regenerator depends upon the reduction in pressure over the surface of the liquid below that corresponding to its temperature which causes a portion of the liquid to evap-

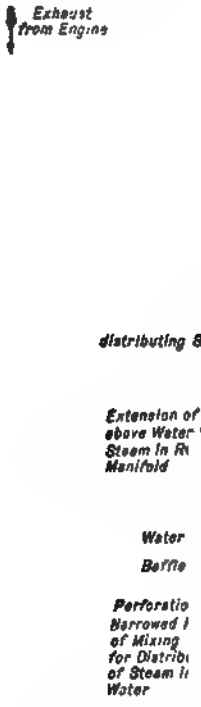

FIG. 44. DRAWINGS OF RATEAU REGENERATOR.

orate, the heat required for evaporation being supplied by the heat liberated by the liquid in having its temperature lowered due to the drop in pressure.

Example. Assuming that a closed vessel contains 1000 lb. water at a temperature of 222.4°. The pressure of saturated steam corresponding to this temperature is 18 lb. per sq. in. absolute.

If the pressure is reduced to 17 lb. the corresponding temperature is 219.4°. The heat liberated is 1000 (222.4 − 219.4) or 3000 B.t.u. The average latent heat for this range of temperature and pressure is 958.3. The amount of water that will be evaporated or steam regenerated is: 3000/958.3 = 3.1 lb. For approximate results to find the weight of water necessary in the regenerator to liberate one pound of steam divide the average latent heat by the temperature drop.

Regenerators are ordinarily operated between the limits of atmospheric pressure and 4 lb. gage.

The constant flow of steam from the regenerator to the turbine is equal to the average rate of engine exhaust.

The capacity of the regenerator to absorb the engine exhaust determines the amount of water required.

Let W = maximum rate of engine exhaust at peak load, lb. per min.

w = mean or average rate of engine exhaust, lb. per min.

S = maximum rate passed to regenerator to be condensed, lb. per min.

$= W - w$

t_1 = initial temperature of the water (212° atmospheric pressure).

t_2 = final temperature of the water (224°, 4 lb. gage pressure).

r_a = average latent heat between the temperatures t_1 and t_2.

C = weight of water to condense 1 lb. steam.

$= \frac{r_a}{t_1 - t_2}$ (approx.). See curves, Fig. 45.

D = weight of water to be circulated per min. maximum demand.

$= S \times C = (W - w)\frac{r_a}{t_1 - t_2}$

E = time allowed to circulate the contents of the regenerator, minutes.

FIG. 45. CURVES SHOWING POUNDS OF WATER IN REGENERATOR PER POUND OF STEAM GENERATED, WHEN WORKING BETWEEN VARIOUS INITIAL AND FINAL PRESSURES.

(In the ype of regenerator shown by Fig. 44, the water is circulated and brought into contact with the steam once every 3 seconds. $E = 0.05$.)

F = Capacity of regenerator lb. water.

$\frac{D}{F}$ = number of times per min. water must be recirculated.

$= \frac{1}{E}$

$F = DE$

Example. The maximum rate of exhaust flow from a number of reciprocating mill engines is $W = 300$ lb. per sec. The average rate of flow is $w = 80$ lb. per sec. If the regenerator is to work between the limits of atmospheric pressure and 4 lb. gage, required the capacity F of regenerator if $E = 0.05$.

$D = 60\ (300 - 80) \times \frac{968}{224 - 212} = 1{,}063{,}932$ lb. per min.

$F = DE = 1{,}063{,}932 \times 0.05 = 53{,}196$ lb.

CHAPTER XII

PUMPS

FUNDAMENTAL PRINCIPLES

Definitions. *Static Head* of a fluid at rest is the vertical distance in feet between the point at which the pressure is taken and the surface of the fluid.

Pressure Head of a fluid in motion is the height in feet of a column of the fluid balanced by the pressure (bursting pressure) existing in the pipe at the point where the pressure is taken. The pressure head is measured by the height of the fluid column in a straight tube inserted in the pipe at right angles to the flow. In dealing with the flow of air this is termed " static head."

Velocity Head is the head, in feet, required to produce the velocity of flow and is measured by the difference between the columns measuring the dynamic head and the pressure head.

Total or Dynamic Head is the sum of the pressure and velocity heads of the fluid in motion at the point where the pressures are taken. This head is measured by the height of the fluid column in a tube having the end that is inserted in the pipe bent directly against the direction of flow. This is termed a "pitot" tube. The dynamic head is the head at any point in the line available for overcoming frictional resistance and creating the velocity of flow in the section beyond. The ordinary pressure gage on the discharge pipe of a pump measures the pressure head only, while the gage on the suction pipe includes in its reading the velocity head as well, so that to obtain the suction pressure head the velocity head must be deducted from this reading. The total head against which the pump is operating will therefore be the sum of the gage readings plus the difference between the velocity heads in the suction and discharge pipes. The above fact should be borne in mind particularly when testing pumps.

If the flow is stopped and the pipe remains full of liquid, the dynamic and static heads become equal.

Pressure Equivalents. The various heads measured in feet are transformed to equivalent pressures in lb. per sq. ft. or sq. in. by the following relations:

h = head in ft.

d = density of the fluid (wt. per cu. ft.). See Table 1, Chapter 2.

P = equivalent pressure lb. per sq. ft.

p = equivalent pressure lb. per sq. in.

$P = hd$ and $p = hd/144$.

For water at ordinary temperature (65° F.) $d = 62.345$, $P = 0.433\,h$ and $h = 2.31\,p$.

Units of Measurement. A *United States* gallon of fresh water weighs 8.33 lb. and contains 231 cu. in.

A cubic foot of water contains 1728 cu. in. or 7.48 U. S. gallons.

A British Imperial gallon contains 277.27 cu. in., which is equivalent to 1.20 U. S. gallons, or 10 lb. in weight.

The normal pressure of the atmosphere is 14.7 lb. per sq. in.; it is equal to a column of water 34 ft. high at ordinary temperatures.

To find the capacity of a cylinder in gallons, square the diameter in inches, multiply by the length in inches and divide by 294.8.

To find the pressure in pounds per sq. in. of a column of water, at ordinary temperatures, multiply the height of the column in feet by 0.433. To find the head in feet, multiply the pressure in pounds by 2.31.

Total Head on Pump. Referring to Fig. 1, the velocity of flow from the rounded orifice (A) at the base of the standpipe shown by dotted lines at the left of the figure, discharging under a head H, will be the same according to *Torricelli's* Theorem*, as that acquired by a body falling freely through the same height, or $v = \sqrt{2gH}$ (velocity in ft. per sec.), H measured in feet.

If the standpipe be attached to the suction pipe of the pump as shown, the pump plunger being held stationary, the velocity of discharge from the delivery line at the reservoir cannot be figured by the above formula, as a portion of the head H is balanced by the total measured

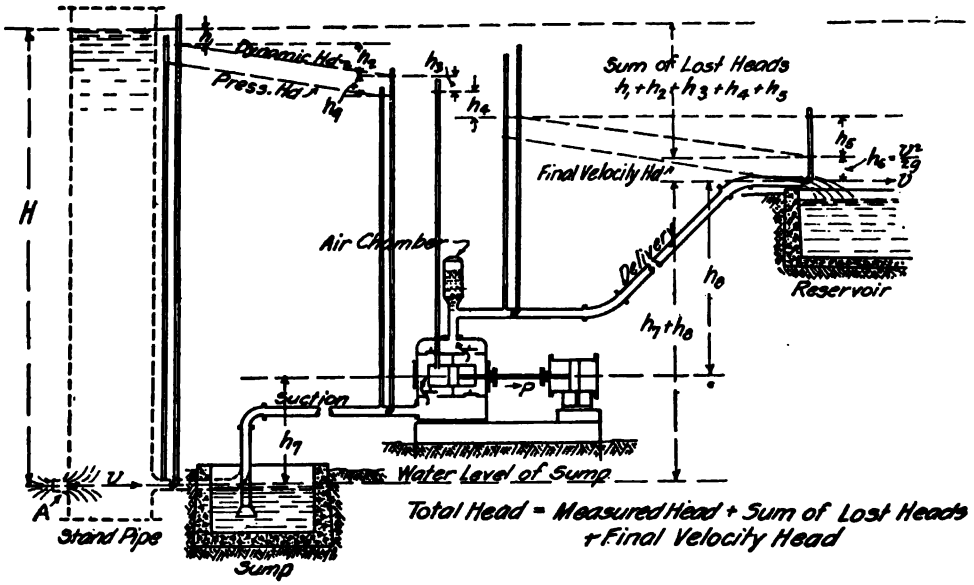

FIG. 1.

head ($h_7 + h_8$) and another portion is required to overcome the frictional resistance in the pump and line, the sum of the "lost heads."

The head lost between any two points is measured by the difference between the dynamic heads at the points considered.

In pumping problems it is convenient to separate the suction head from the delivery head on account of the fact that the water is lifted to the pump by the atmospheric pressure acting on the surface of the water. The suction lift is consequently limited.

Let H = total head in ft. required to overcome all frictional resistance, actually lift and create the velocity of discharge.

h_1 = head lost at entry to suction pipe.

h_2 = head lost in friction in suction pipe.

h_3 = head lost in pump suction valves.

h_9 = velocity head in suction pipe $= \frac{V_s^2}{2g}$, V_s = vel. in ft. per sec.

h_7 = measured suction head.

H_s = total suction head.

$= h_1 + h_2 + h_3 + h_9 + h_7$

h_4 = head lost at entrance to pump delivery and in delivery valves.

h_5 = head lost in delivery pipe.

* For a discussion of this theorem see the Chapter on "Water, Steam and Air."

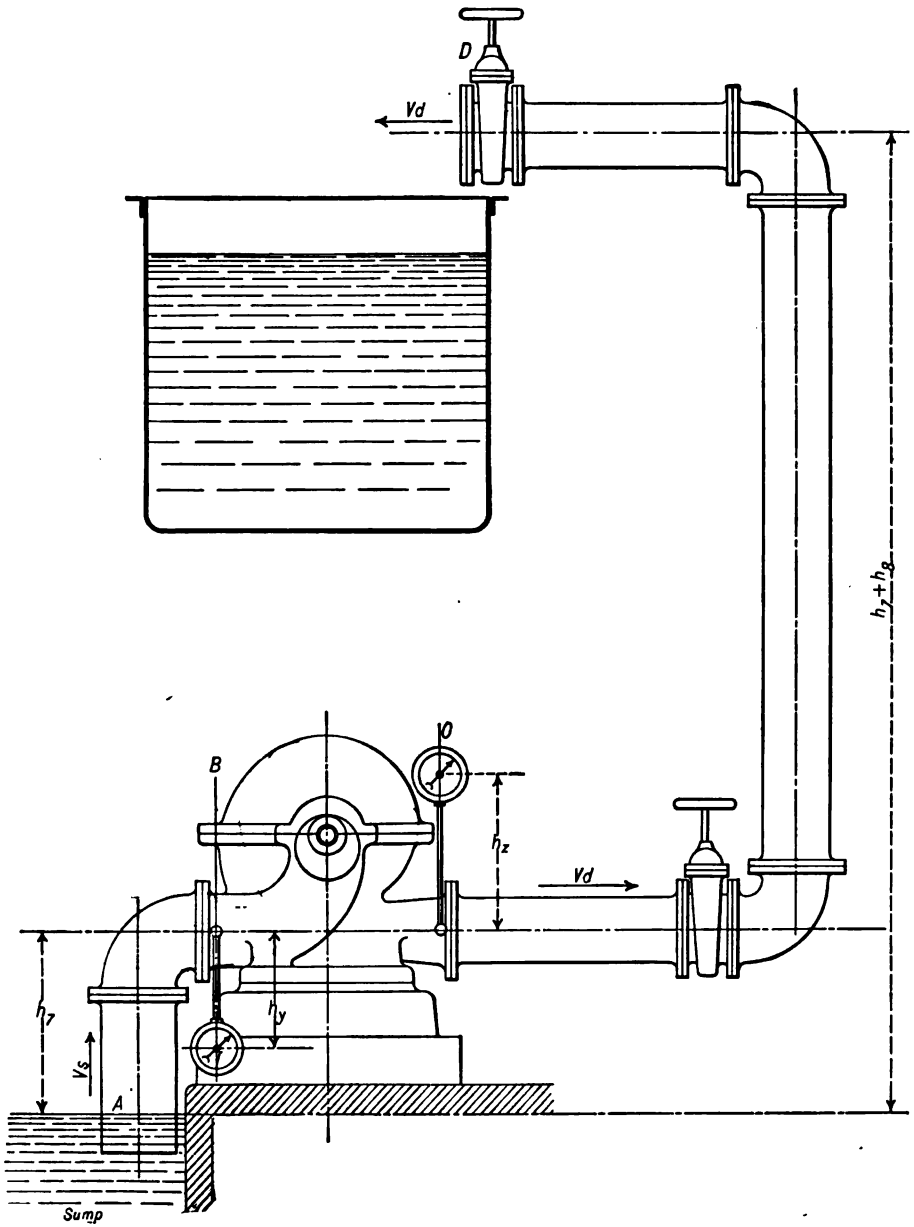

FIG. 2.

h_4 = final velocity head = $\frac{V_d^2}{2g}$, V_d = vel. in ft. per sec.

h_6 = measured delivery head.

H_D = total delivery head, ft.
$= h_4 + h_5 + h_6 + h_6$.

$H = (H_s - h_0) + H_D$, assuming the suction and delivery pipes to be of the same size.
$= (h_1 + h_2 + h_3 + h_4 + h_5) + (h_7 + h_8) + h_6$.
= (lost heads) + (measured head) + (final velocity head).

The total head to be overcome by the pump is therefore equal to the sum of the lost heads + sum of measured heads + final velocity head. The final velocity head h_6 being small, is ordinarily neglected in calculations involving the flow of water.

The head lost by friction in the pump suction valves, discharge valves and at entry to the delivery pipe need not be considered in pumping problems as the sum of the heads lost through the pump is taken care of and included in the efficiency factor of the pump.

The *total head* for which a pump is selected is therefore:

$H = (h_1 + h_2 + h_5) + (h_7 + h_8)$ feet or (sum of lost heads) + (sum of measured heads).

Let h_y = measured distance from center of pump (Fig. 2) to center of suction gage, feet.

h_z = measured distance from center of pump to center of discharge gage, feet.

p_s = gage pressure lb. per sq. in. from suction gage reading (note that this will be below atmospheric pressure).

p_d = gage pressure lb. per sq. in. from discharge gage reading.

The total head against which the pump is operating is therefore:

$$H = \frac{144p_s}{d} \pm h_y - \frac{V_s^2}{2g} + \frac{144p_d}{d} + h_z + \frac{V_d^2}{2g}$$

If the gage on the suction pipe is above the center line of the pump h_y is minus, and if below, as shown, h_y is plus.

Limit of Suction Lift. The atmospheric pressure (14.7 lb. per sq. in. absolute at sea level) will support a column of water (temperature 65°) $h = 2.31 \times 14.7$ or 33.96 feet high.

In order, however, to obtain the full effect of the atmospheric pressure it would be necessary to create a perfect vacuum on top of the water column. This is an impossibility owing to imperfections in the pump and from the fact that a vapor tension exists over the surface of the water corresponding to its temperature. The vapor tension in lb. per sq. in. absolute pressure corresponding to various temperatures is found in the steam tables from which the corresponding heights of water equivalent to the pressures are readily calculated. Table 1 was calculated in this manner.

TABLE 1

MAXIMUM THEORETICAL HEIGHT TO WHICH A PUMP CAN LIFT WATER BY SUCTION AT DIFFERENT TEMPERATURES

(Barometer 29.92)

Temperature of Water ° F.	Maximum Theoretical Lift, Feet	Temperature of Water ° F.	Maximum Theoretical Lift, Feet
40	33.6	130	29.2
50	33.5	140	27.8
60	33.4	150	25.4
70	33.1	160	23.5
80	32.8	170	20.3
90	32.4	180	16.7
100	31.9	190	12.8
110	31.3	200	7.6
120	30.3	210	1.3

TABLE 2

LOSS OF HEAD IN FEET DUE TO FRICTION AND VELOCITY, IN VARIOUS SIZE NEW, SMOOTH, STRAIGHT, CAST-IRON PIPES, PER 100 FEET, WHEN DISCHARGING THE FOLLOWING QUANTITIES OF WATER

Gallons per Minute	1 Inch		1¼ Inches		1½ Inches		2 Inches		2½ Inches		3 Inches		4 Inches		5 Inches		6 Inches		8 Inches		10 Inches		12 Inches	
	Vel.	Fric.	Vel.	Fric.	Vel.	Fric.	Vel.	Fric.	Vel.	Fric.	Vel.	Fric.	Vel.	Fric.	Vel.	Fric.	Vel.	Fric.	Vel.	Fr.	Vel.	Fr.	Vel.	Fr.
5	1.86	2.32	1.07	0.60	0.79	0.28	0.49	0.08	0.24	0.06	....	....	....	....	....	....	....	....	....	....	....	....	....	....
10	3.72	8.40	2.14	2.18	1.57	1.02	1.02	0.36	0.65	0.12	0.45	0.05	....	....	....	....	....	....	....	....	....	....	....	....
15	6.18	18.90	3.92	4.65	2.72	2.25	1.53	0.81	0.98	0.25	0.68	0.11	....	....	....	....	....	....	....	....	....	....	....	....
20	7.44	30.10	4.29	7.90	3.15	3.70	2.04	1.29	1.31	0.43	0.91	0.18	....	....	....	....	....	....	....	....	....	....	....	....
25	9.30	45.50	5.36	11.90	4.56	5.60	2.60	1.96	1.63	0.66	1.13	0.27	....	....	....	....	....	....	....	....	....	....	....	....
30	11.15	64.00	6.43	16.90	4.72	7.80	3.06	2.73	1.96	0.92	1.36	0.38	....	....	....	....	....	....	....	....	....	....	....	....
35	13.02	85.00	7.51	22.30	5.51	10.30	3.57	3.66	2.29	1.23	1.59	0.51	....	....	....	....	....	....	....	....	....	....	....	....
40	14.88	109.00	8.58	28.50	6.30	13.30	4.05	4.68	2.62	1.57	1.82	0.65	1.02	0.16	....	....	....	....	....	....	....	....	....	....
45	....	.....	9.68	35.20	7.08	16.60	4.60	5.80	2.95	1.97	2.02	0.80	1.17	0.20	....	....	....	....	....	....	....	....	....	....
50	....	.....	10.72	43.20	7.87	20.20	5.11	7.10	3.30	2.38	2.27	0.98	1.28	0.24	....	....	....	....	....	....	....	....	....	....
70	....	.....	....	....	11.02	37.60	7.15	13.20	4.60	4.42	3.18	1.83	1.79	0.45	1.14	0.15	....	....	....	....	....	....	....	....
100	....	.....	....	....	15.74	73.00	10.20	25.60	6.54	8.60	4.54	3.52	2.55	0.88	1.63	0.29	1.14	0.10	....	....	....	....	....	....
120	....	.....	....	....	....	....	12.25	36.00	7.84	12.00	5.45	4.97	3.06	1.22	1.96	0.41	1.42	0.18	....	....	....	....	....	....
150	....	.....	....	....	....	....	15.30	54.00	9.80	18.72	6.80	7.72	3.84	1.82	2.45	0.63	1.71	0.23	....	....	....	....	....	....
175	....	.....	....	....	....	....	....	....	11.43	23.70	7.92	9.75	4.45	2.40	2.86	0.84	2.00	0.34	....	....	....	....	....	....
200	....	.....	....	....	....	....	....	....	13.07	30.90	9.08	12.80	5.11	3.12	3.27	1.06	2.28	0.44	....	....	....	....	....	....
250	....	.....	....	....	....	....	....	....	....	....	11.28	19.70	6.40	4.80	4.08	1.60	2.80	0.66	1.60	0.16	....	....	....	....
270	....	.....	....	....	....	....	....	....	....	....	12.45	22.70	6.90	5.50	4.42	1.86	3.03	0.81	1.70	0.18	....	....	....	....
300	....	.....	....	....	....	....	....	....	....	....	13.62	27.10	7.66	6.70	4.90	2.25	3.40	0.92	1.90	0.26	....	....	....	....
350	....	.....	....	....	....	....	....	....	....	....	....	....	8.90	8.80	5.72	2.99	3.98	1.21	2.20	0.29	....	....	....	....
400	....	.....	....	....	....	....	....	....	....	....	....	....	10.20	11.30	6.54	3.81	4.54	1.58	2.60	0.40	....	....	....	....
450	....	.....	....	....	....	....	....	....	....	....	....	....	11.50	14.10	7.35	4.75	5.12	1.96	2.92	0.46	1.80	0.15	....	....
470	....	.....	....	....	....	....	....	....	....	....	....	....	12.16	16.00	7.78	5.30	5.49	2.23	3.07	0.55	1.92	0.17	....	....
500	....	.....	....	....	....	....	....	....	....	....	....	....	12.77	17.20	8.17	5.80	5.60	2.33	3.20	0.58	2.00	0.19	1.40	0.08
750	....	.....	....	....	....	....	....	....	....	....	....	....	....	....	12.26	12.30	8.40	4.87	4.80	1.24	3.00	0.39	2.10	0.17
1050	....	.....	....	....	....	....	....	....	....	....	....	....	....	....	....	....	12.57	10.30	7.04	2.51	4.40	0.83	3.08	0.34
1250	....	.....	....	....	....	....	....	....	....	....	....	....	....	....	....	....	14.10	13.00	8.00	3.18	5.00	1.03	3.50	0.43
1500	....	.....	....	....	....	....	....	....	....	....	....	....	....	....	....	....	....	....	9.60	4.48	6.10	1.49	4.20	0.61
2000	....	.....	....	....	....	....	....	....	....	....	....	....	....	....	....	....	....	....	12.70	7.65	8.10	2.50	5.60	1.02
2500	....	.....	....	....	....	....	....	....	....	....	....	....	....	....	....	....	....	....	....	....	10.10	3.81	7.00	1.56
3000	....	.....	....	....	....	....	....	....	....	....	....	....	....	....	....	....	....	....	....	....	12.10	5.30	8.40	2.42
3500	....	.....	....	....	....	....	....	....	....	....	....	....	....	....	....	....	....	....	....	....	14.10	7.20	9.80	2.80
4000	....	.....	....	....	....	....	....	....	....	....	....	....	....	....	....	....	....	....	....	....	....	....	11.35	3.80
4200	....	.....	....	....	....	....	....	....	....	....	....	....	....	....	....	....	....	....	....	....	....	....	11.93	4.50
4500	....	.....	....	....	....	....	....	....	....	....	....	....	....	....	....	....	....	....	....	....	....	....	12.78	4.82
5000	....	.....	....	....	....	....	....	....	....	....	....	....	....	....	....	....	....	....	....	....	....	....	14.20	5.82

When pipe is slightly rough add 15%. When very rough add 30%.

Vel. = Velocity in pipe and elbows in feet per second.

Fric. = Friction head in feet.

TABLE 3

LOSS OF HEAD IN FEET, DUE TO FRICTION IN VARIOUS SIZE SMOOTH 90° ELBOWS

Gallons per Minute	1 Inch		1¼ Inches		1½ Inches		2 Inches		2½ Inches		3 Inches		4 Inches		5 Inches		6 Inches		8 Inches		10 Inches		12 Inches	
	Vel.	Fric.	Vel.	Fric.	Vel.	Fric.	Vel.	Fric.	Vel.	Fric.	Vel.	Fric.	Vel.	Fric.	Vel.	Fric.	Vel.	Fric.	Vel.	Fr.	Vel.	Fr.	Vel.	Fr.
5	2.04	0.06	1.3	0.14	....	....	....	....	....	....	....	....	....	....	....	....	....	....	....	....	....	....	....	....
10	4.08	0.22	2.6	0.21	....	....	....	....	....	....	....	....	....	....	....	....	....	....	....	....	....	....	....	....
15	6.12	0.49	3.9	0.29	2.73	0.09	....	....	....	....	....	....	....	....	....	....	....	....	....	....	....	....	....	....
20	8.16	0.87	5.2	0.52	3.64	0.16	....	....	....	....	....	....	....	....	....	....	....	....	....	....	....	....	....	....
25	10.20	1.35	6.5	0.80	4.55	0.25	2.60	0.09	....	....	....	....	....	....	....	....	....	....	....	....	....	....	....	....
30	12.24	1.95	7.8	1.15	5.46	0.36	3.06	0.13	....	....	....	....	....	....	....	....	....	....	....	....	....	....	....	....
35	14.28	2.65	9.1	1.60	6.37	0.50	3.57	0.18	2.29	0.09	....	....	....	....	....	....	....	....	....	....	....	....	....	....
40	16.32	3.46	10.4	2.05	7.28	0.64	4.05	0.23	2.62	0.11	....	....	....	....	....	....	....	....	....	....	....	....	....	....
45	....	.....	11.7	2.70	8.19	0.81	4.60	0.29	2.95	0.14	2.02	0.06	....	....	....	....	....	....	....	....	....	....	....	....
50	....	.....	....	....	9.10	0.99	5.11	0.35	3.30	0.18	2.27	0.08	....	....	....	....	....	....	....	....	....	....	....	....
70	....	.....	....	....	12.74	1.98	7.15	0.70	4.60	0.34	3.18	0.19	1.79	0.05	....	....	....	....	....	....	....	....	....	....
100	....	.....	....	....	....	....	10.20	1.41	6.54	0.74	4.54	0.29	2.55	0.10	....	....	....	....	....	....	....	....	....	....
120	....	.....	....	....	....	....	12.25	2.24	7.84	1.17	5.45	0.45	3.06	0.15	1.96	0.06	....	....	....	....	....	....	....	....
150	....	.....	....	....	....	....	15.30	3.20	9.80	1.58	6.80	0.66	3.84	0.22	2.45	0.09	....	....	....	....	....	....	....	....
175	....	.....	....	....	....	....	....	....	11.43	2.16	7.92	0.90	4.45	0.30	2.86	0.12	2.00	0.06	....	....	....	....	....	....
200	....	.....	....	....	....	....	....	....	13.07	2.96	9.08	1.18	5.11	0.40	3.27	0.16	2.28	0.07	....	....	....	....	....	....
250	....	.....	....	....	....	....	....	....	....	....	11.28	1.84	6.40	0.62	4.08	0.25	2.80	0.12	1.60	0.04	....	....	....	....
270	....	.....	....	....	....	....	....	....	....	....	12.45	2.35	6.90	0.70	4.42	0.27	3.08	0.14	1.70	0.04	....	....	....	....
300	....	.....	....	....	....	....	....	....	....	....	13.62	2.63	7.66	0.89	4.90	0.36	3.40	0.18	1.90	0.06	....	....	....	....
350	....	.....	....	....	....	....	....	....	....	....	....	....	8.90	1.24	5.72	0.50	3.98	0.24	2.20	0.09	...	....	....	....
400	....	.....	....	....	....	....	....	....	....	....	....	....	10.20	1.59	6.54	0.63	4.54	0.29	2.60	0.10	...	....	....	....
450	....	.....	....	....	....	....	....	....	....	....	....	....	11.50	2.01	7.35	0.81	5.12	0.39	2.92	0.13	1.80	0.05	....	....
470	....	.....	....	....	....	....	....	....	....	....	....	....	12.16	2.26	7.78	0.90	5.49	0.46	3.07	0.14	1.92	0.06	....	....
500	....	.....	....	....	....	....	....	....	....	....	....	....	12.77	2.47	8.17	1.01	5.60	0.48	3.20	0.16	2.00	0.06	1.40	0.04
750	....	.....	....	....	....	....	....	....	....	....	....	....	....	....	12.26	2.24	8.40	1.09	4.80	0.36	3.00	0.15	2.10	0.07
1050	....	.....	....	....	....	....	....	....	....	....	....	....	....	....	....	....	12.57	2.41	7.04	0.76	4.40	0.29	3.08	0.14
1250	....	.....	....	....	....	....	....	....	....	....	....	....	....	....	....	....	14.10	3.02	8.00	1.00	5.00	0.40	3.50	0.20
1500	....	.....	....	....	....	....	....	....	....	....	....	....	....	....	....	....	....	....	9.60	1.44	6.10	0.58	4.20	0.29
2000	....	.....	....	....	....	....	....	....	....	....	....	....	....	....	....	....	....	....	12.70	2.44	8.10	1.01	5.60	0.47
2500	....	.....	....	....	....	....	....	....	....	....	....	....	....	....	....	....	....	....	15.90	3.68	10.10	1.57	7.00	0.75
3000	....	.....	....	....	....	....	....	....	....	....	....	....	....	....	....	....	....	....	....	...	12.10	2.25	8.40	1.08
3500	....	.....	....	....	....	....	....	....	....	....	....	....	....	....	....	....	....	....	....	...	14.10	3.05	9.80	1.47
4000	....	.....	....	....	....	....	....	....	....	....	....	....	....	....	....	....	....	....	....	...	....	...	11.35	1.92
4200	....	.....	....	....	....	....	....	....	....	....	....	....	....	....	....	....	....	....	....	....	....	...	11.98	2.18
4500	....	.....	....	....	....	....	....	....	....	....	....	....	....	....	....	....	....	....	....	....	....	...	12.78	2.43
5000	....	.....	....	....	....	....	....	....	....	....	....	....	....	....	....	....	....	....	....	....	....	...	14.20	3.01

Table shows losses for 1 elbow, and is based on *Weisbach's* formula for short radius bends.
When elbow is slightly rough add 15%. When very rough add 30%.

Vel. = Velocity in pipe and elbows in feet per second.
Fric. = Friction head in feet.

In practice these lifts cannot be obtained; 20 to 25 ft. measured suction head is considered a practical limit in pumping water at ordinary temperatures. (60 to 70 degs. F.)

If air be admitted to the suction line near the surface of the water, the column becomes a mixture of water and air, and owing to the decreased density of the mixture the limit of lift is greatly increased. This scheme is, however, not considered very practical and is not resorted to except in cases of emergency. In pumping hot water it is *always advisable to have the water flow into the suction chamber by gravity.* This statement applies particularly to boiler-feed pumps drawing their supply from feed-water heaters.

Head Lost by Entry to a Pipe. The head lost at entry to a straight pipe is usually stated as $h_1 = 0.5\frac{V^2}{2g}$, V = velocity in ft. per sec.

Head Lost through Pump. The head lost through the pump valves and passages is difficult to estimate and naturally varies with the construction. This loss of head, however, *does not* enter into the calculations, as it is included in the efficiency factor (e) of the pump and need not, therefore, be considered.

It is assumed that the efficiency referred to for a reciprocating pump has been calculated by using the delivered water horsepower, as calculated from the gage readings, and not the indicated horsepower of the water end as determined by means of an indicator. The latter if used in calculating the efficiency gives the mechanical efficiency of the pump and includes the loss occasioned by the friction of water through the pump

Head Lost by Pipe Friction.

h = head lost in ft.
L = length of pipe in ft.
D = internal diam. of pipe in ft.
V = velocity water.
f = coef. friction.

$$h = f\frac{L}{D} \times \frac{V^2}{2g}.$$

Fanning gives for clean pipe the following average values (Table 4) of f for velocities of 1.7 to 7 ft. per second. These coefficients vary considerably with different authorities.

For additional data on the flow of water and friction pressure loss chart, see Chapter II, Table 3, and Fig. 35 at the end of this chapter.

TABLE 4

Diameter Pipe, Inches	Value of f	
	100 Feet per Minute	400 Feet per Minute
1	0.034	0.025
3	.030	.024
6	.027	.022
10	.025	.021
12	.024	.020

Head Lost by Friction in Elbows. The following formula by *Weisbach* is commonly used to approximate the head lost through ells:

$$h_e = \left[0.131 + 1.847\left(\frac{r}{R}\right)^{3.5}\right] \times \frac{V^2}{2g} \times \frac{a}{180}$$

in which r = internal radius of pipe in feet, R = radius of curvature of axis of pipe, V = velocity in feet per sec., and a = the central angle or angle subtended by the bend.

TABLE 5

LOSS OF HEAD IN 90° BENDS AND ENTRANCE HEAD IN FEET FOR VELOCITIES OF 1 TO 15 FEET PER SECOND

Velocity, Feet per Second		1	2	3	4	5	6	7	8	8.5	9	9.5	10	10.5	11	11.5	12	13	14	15
Loss of Head in Feet	$\frac{r}{R} = 1$	0.015	0.061	0.138	0.247	0.384	0.555	0.753	0.985	1.11	1.25	1.35	1.53	1.69	1.86	2.02	2.22	2.59	3.02	3.47
	$\frac{r}{R} = \frac{1}{2}$	0.003	0.009	0.021	0.036	0.057	0.082	0.11	0.15	0.17	0.19	0.21	0.23	0.25	0.27	0.30	0.33	0.38	0.45	0.51
Entrance Head in Feet		0.01	0.03	0.07	0.13	0.195	0.28	0.38	0.50	0.57	0.63	0.70	0.78	0.85	0.93	1.02	1.12	1.31	1.51	1.75

The accuracy of this formula when applied to standard fittings is questionable; the usual method employed to allow for the friction of ells and valves is to add to the measured length of the line various amounts as indicated in Table 6.

One prominent maker of hydraulic machinery makes use of the following data in estimating the friction head of fittings. The following equivalent length in feet of straight pipe should be added for each fitting in figuring friction.

TABLE 6

FRICTION OF STANDARD PIPE FITTINGS

Equivalent length of straight pipe to be added to measured length

Size of Fitting	¾"	1"	1¼"	1½"	2"	2½"	3"	4"	5"	6"
Elbows	5	5	6	7	7	10	12	18	25	30
Return bends	10	10	12	14	15	20	24	36	50	60
Globe valves	6	6	7	8	8	12	24	30	40	50

Owing to the burr (caused by cutting the pipe with a wheel cutter) obstructing the flow in the smaller pipes, it is advisable, unless the burrs are reamed out, to multiply the above figures by 3 for ¾-inch and 1-inch fittings and by 2 for 1¼, 1½ and 2-inch fittings.

TABLE 7

COMPARATIVE LOSS OF HEAD IN FITTINGS AND VALVES

(Experiments of *John R. Freeman*)

Name of Fitting	Number of Feet of Clean, Straight Pipe of Same Size which would Cause the Same Loss as Fitting	Name of Fitting	Number of Feet of Clean, Straight Pipe of Same Size which would Cause the Same Loss as Fitting
6-in. Swing check valve	50	3-in. to 8-in. short-turn tees	17
6-in. Lift check valve	200	½ bend	5
4-in. Swing check valve	25	6-in. Grinnel dry pipe valve	80
4-in. Lift check valve	130	4-in. Grinnel dry pipe valve	47
2½-in. to 8-in. long-turn ells	4	6-in. Grinnel alarm check valve	100
2½-in. to 8-in. short-turn ells	9	4-in. Grinnel alarm check valve	47
3-in. to 8-in. long-turn tees	9		

Allowable Velocity of Water through Pipes. From the diagram of friction head of pipes, Fig. 6, Chapter II, and Table 3, it is seen that the head lost increases very rapidly as the

velocity and quantity discharged increases. In order to prevent excessive loss, practice has shown that the velocity of water in the discharge line should ordinarily not exceed 360 to 480 ft. per min. and approximately 200 ft. in the suction line for reciprocating pumps. Suction and discharge lines for ordinary length of runs are usually made the same size as called for by the flanges on the pump, never smaller, and preferably larger when the runs are long, particularly the suction line.

The practice of centrifugal pump manufacturers is to allow a discharge velocity of 10 to 12 ft. per sec. or 600 to 720 ft. per min. at rated capacity of pump.

The size of outlet of a centrifugal pump, however, is no gage whatever of the proper size of piping to attach to it.

DIRECT-ACTING STEAM PUMPS

A steam actuated pump without a flywheel is known as a direct-acting steam pump. This type of pump having comperatively few working parts requires little attention and is in general very reliable. For general service about a power plant—boiler feeding, vacuum pumps, etc.—it is the most popular of all types. It is built either simplex or duplex.

Simplex Pump. This type is built with one steam cylinder and one water cylinder. It

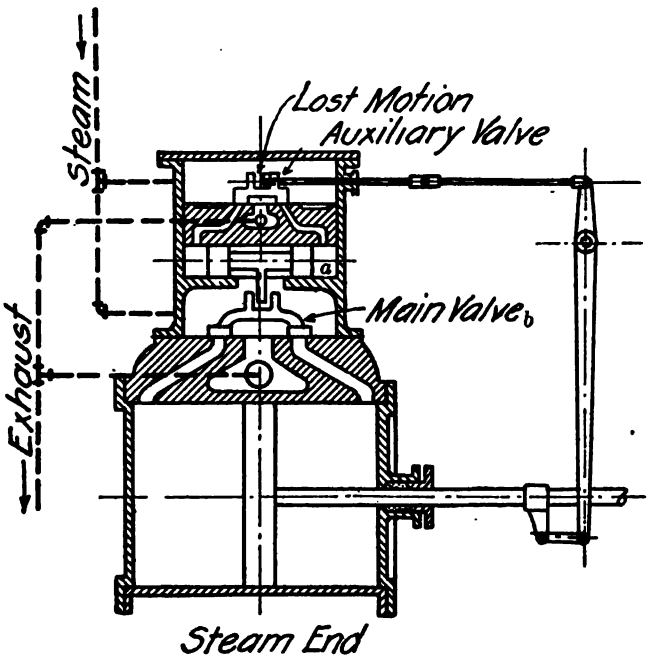

FIG. 3. SIMPLEX PUMP.

employs a steam-thrown main valve in order to obtain a reversal of stroke, the action of which will be understood by reference to Fig. 3. The sketch refers to no particular make of pump and is intended to illustrate only the principle involved.

Just before the piston reaches the end of its travel the auxiliary steam valve, moved in the opposite direction by the link motion connected to the piston rod, uncovers the small steam port which admits steam back of the piston *a*, which in turn operates the main valve *b*. The movement of the main valve uncovers the steam port connected with the end of the cylinder toward which the piston is moving and at the same time uncovers the exhaust port at the other end, causing a reversal of the motion of the piston and plunger.

arge

FIG. 4. DUPLEX STEAM PUMP.

Steam Cylinder

FIG. 5. DUPLEX PUMP VALVE GEAR.

Recommended capacities for various sizes of simplex pumps are given by Table 8.

Duplex Steam Pump (Figs. 4 and 5). This type of pump is built with two steam cylinders and two water cylinders; that is, two simplex steam pumps placed side by side with a valve motion so designed that the movement of the slide valve is controlled and operated by the opposite pump. As one piston moves to the end of its stroke and is gradually brought to rest, it moves the slide valve of the opposite steam cylinder admitting steam back of the piston which is at rest, causing it to similarly move forward to the opposite end of its stroke.

The valves have neither "lap" nor "lead," and there is some lost motion allowed between the valve and the operating mechanism, which causes the piston to pause at the completion of

FIG. 6. AUXILIARY CUSHION PORT.

the stroke. The pistons are in action or moving approximately only ⅚ of the time. The cylinders have five ports. The two end ones are for the admission of steam and the three inner ones for the exhaust. The piston is cushioned at the end of its stroke and prevented from striking the cylinder head by the piston passing over the exhaust port in the steam cylinder and trapping the steam in the clearance space between the piston and the cylinder head.

For steam cylinders 14″ diam. and above an auxiliary port is ordinarily provided and is placed beyond the regular exhaust port and communicating with it through a valve (Fig. 6). This arrangement allows the cushioning action and the length of stroke, to some extent, to be regulated. A 12″ stroke pump has a piston clearance of approximately ½″ at each end of the cylinder.

Recommended capacities for various sizes of duplex pumps are given by Table 8, and dimensions by Tables 10 and 11.

Various types of water ends used for direct-acting steam pumps are shown by Figs. 7, 8, and 9.

One of the advantages of the center and outside packed plunger is due to the fact that any leakage past the plunger may be immediately detected and readily stopped by an adjustment of the packing from the outside, whereas with the piston type it is necessary to remove the piston from the rod when repacking is necessary. In order to even up the velocity of discharge an air chamber should always be provided on the discharge side in case the discharge pipe is long.

Power Pumps. In this class of pump (Fig. 31) the water plungers are actuated by means of a crank and connecting rod. A gear wheel mounted on the crankshaft meshes with a pinion on the receiving pulley shaft.

The most popular type, for general service, is constructed with three vertical single-acting cylinders and termed a triplex power pump. The cranks are placed 120° apart, which arrangement gives a fairly steady discharge.

The pump is generally driven by means of an electric or an internal combustion motor or steam engine through a belt or silent chain, although sometimes geared direct to the armature shaft with a rawhide pinion.

This type of pump is largely used when electric power is available for all classes of service as boiler feeding, house service, elevator service, hydraulic press-work, etc. See Table 20 for speeds and capacities.

For intermittent house-tank service the motor is controlled by means of a float in the tank which operates an automatic switch, controlling the motor, as the water level in the tank rises or falls.

The efficiency (water hp./brake hp.) of this class of geared pump is approximately 75% (Fig. 10). When a power pump is used for boiler feeding and driven by a motor the rate of pumping may be varied by controlling a by-pass valve located between the suction and discharge side of the pump.

Reciprocating Pump Capacity.

Let Q = cu. ft. per min. actually required to be pumped.

D = cu. ft. per min. plunger displacement.

E = volumetric efficiency of water end.

$$= \frac{Q}{D} \text{ and } D = \frac{Q}{E}$$

d = density of water corresponding to its temperature (62.3 lb. per cu. ft. at 60°).

b = diameter water cylinder, inches.

S = stroke, inches.

n = number of working strokes per min., each water cylinder.

Plunger displacement per stroke cu. in. $= 0.7854b^2S$.

Plunger displacement cu. ft. per min. $= \dfrac{0.7854b^2Sn}{1728}$

$= 0.000454b^2Sn$.

Plunger displacement in lb. per min. $= D \times d$.

Plunger displacement in gal. per min. $= 7.48D$.

Diameter water end in inches,

$$b = \sqrt{\frac{1728D}{0.7854Sn}} = \sqrt{\frac{1728Q}{0.7854nES}} = 46.91\sqrt{\frac{Q}{nES}}$$

Volumetric Efficiency of Reciprocating Pumps (E). The volumetric efficiency of a reciprocating pump is defined as the ratio of the volume actually discharged to the plunger displacement in a unit of time.

Owing to the fact that it is impossible to absolutely prevent leakage by the valves and piston or plunger of a reciprocating pump the actual displacement of the plunger must be greater than the quantity of water to be handled. Experiments conducted by the Inspection Department of the *Associated Factory Mutual Fire Insurance Cos.* on a number of duplex steam pumps show that in a new pump with clean valves and air-tight suction pipe and less than 15 ft. suction lift the actual delivery is only 1½ to 5% less than the plunger displacement. As the slip increases with wear 10% may be considered a fair allowance to cover slip, valve leakage, etc. The value of E may ordinarily be assumed in calculations as 85 to 90% with pump in fair working condition. The rated capacity of pumps as given by manufacturers' catalogs refer to plunger displacement, consequently a deduction of approximately 10 to 15% from the capacity stated should be made to cover slip and leakage.

Number of Working Strokes per Minute (n). In order to reduce to a safe margin the strains and consequent wear on the working parts of the water end, which are produced mainly by the impact of the piston or plunger on the water, the number of reversals or strokes per min. must necessarily be limited. The custom of rating pumps at a piston speed of 100 ft. per min. is becoming obsolete. Experience has shown that for long life and good service pumps which are to operate continuously as for boiler feeding, water works, etc., the number of working strokes per min. should not ordinarily exceed the values given in Table 8. If the pump is to be only occasionally operated as in the case of fire pumps the speed may be practically double the tabular

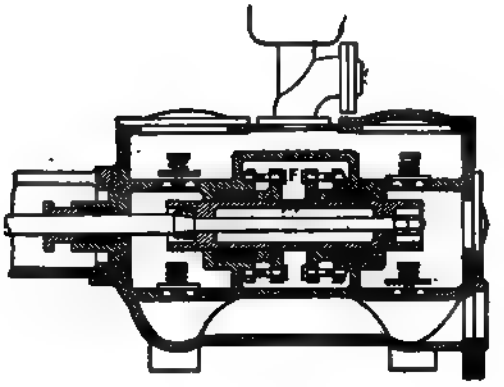

FIG. 7. PACKED PISTON.

FIG. 8. CENTER OUTSIDE PACKING.

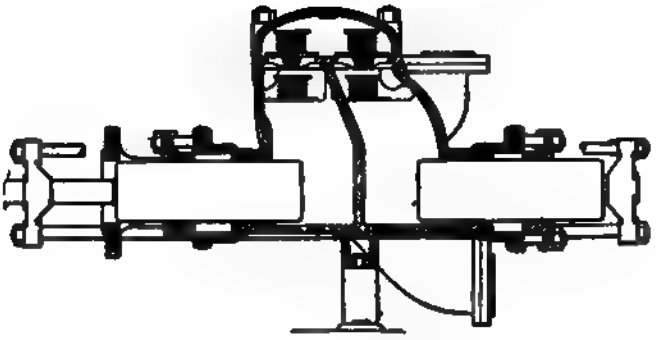

FIG. 9. OUTSIDE-PACKED PLUNGERS. TYPES OF WATER ENDS FOR STEAM PUMPS.

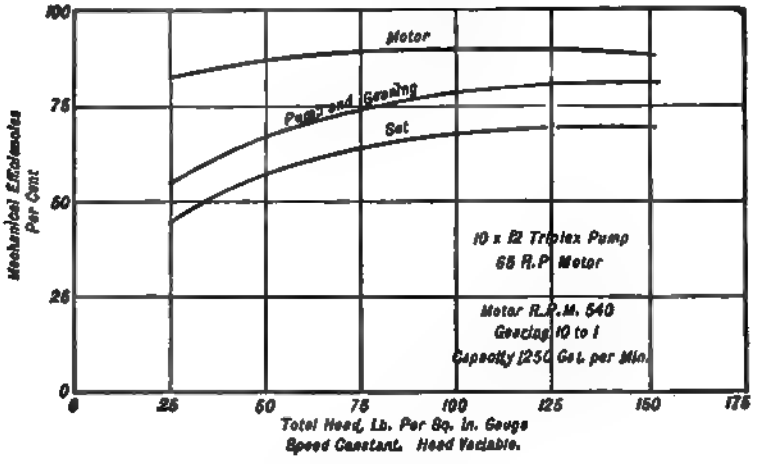

FIG. 10.

values as the consideration of wear for the brief periods during which the pump is operated is not an important item.

TABLE 8

CAPACITIES OF BOILER FEED PUMPS

Single: Steam Actuated
Duplex: Steam Actuated
Triplex: Power

Hp. of Boiler	Pounds per Hour	Gallons per Minute	Single Pump		Duplex Pump		Triplex Pump	
			Size	No. Stks. Min.	Size	No. Stks. Min.	Size	R. P. M.
50	1830	3.8	.....	..	3 x 2 x 4	40	2 x 3	32
75	2742	5.7	.....	..	4½ x 3 x 4	27	2½ x 4	24
100	3665	7.6	5½ x 3 x 10	27	4½ x 3 x 4	35	2½ x 4	31
150	5489	11.4	5½ x 3 x 10	41	5¼ x 3½ x 5	31	3 x 4	32
200	7320	15.26	6½ x 4 x 10	30	5¾ x 3½ x 5	41	4 x 4	24
250	9152	19.	6½ x 4 x 10	38	5¼ x 3½ x 5	51	4 x 4	29
300	10990	22.9	6½ x 4 x 10	46	6 x 4 x 6	39	4 x 4	36
350	12820	27.	7½ x 5 x 12	29	6 x 4 x 6	42	4 x 6	28
400	14652	30.	7½ x 5 x 12	33	7 x 4 x 10	31	4 x 6	31
500	18310	38.	7½ x 5 x 12	41	7 x 4 x 10	41	4 x 6	38
600	21975	46.	9½ x 6 x 12	34	7 x 4½ x 10	38	5½ x 6	25
700	25642	53.	9½ x 6 x 12	40	7 x 4½ x 10	44	5½ x 6	30
800	29300	61.	11 x 7 x 14	28	8 x 5 x 10	40	5½ x 8	25
1000	36625	76.2	11 x 7 x 14	35	10 x 6 x 12	28	5½ x 8	32
1200	43956	92.	11 x 7 x 14	45	10 x 6 x 12	35	7 x 8	24
1500	54940	114.	13½ x 8 x 14	41	10 x 6 x 12	44	7 x 8	29
1800	65930	137.4	13½ x 8 x 14	47	12 x 7 x 12	38	7 x 8	35
2000	73259	152.5	13½ x 9 x 18	33	12 x 8 x 12	33	8 x 8	30
2500	91602	191.	13½ x 9 x 18	41	12 x 8 x 12	40	8 x 10	30
3000	109890	229.	16 x 10 x 18	41	12 x 9 x 12	38	8 x 10	36
3500	128200	267.	18 x 12 x 24	25	14 x 10 x 12	41	9 x 10	34
4000	146525	305.	18 x 12 x 24	28	16 x 11 x 12	33	9 x 12	31
4500	164880	343.	20 x 14 x 24	24	16 x 11 x 12	38	9 x 12	35
5000	183156	382.	20 x 14 x 24	27	16 x 12 x 12	35	10 x 12	32
6000	219778	458.	20 x 16 x 24	25	16 x 12 x 12	43	11 x 12	31
7000	256410	534.	.....	..	20 x 14 x 15	29	12 x 12	31
8000	293044	610.	.....	..	20 x 14 x 15	33	13 x 12	30
10000	366300	764.	.....	..	20 x 15 x 15	36	14 x 15	26

Direct-Acting Simplex or Duplex Boiler Feed Pumps. The boiler feed pump should be large enough to take care of the maximum overload of the boilers without having to operate at an excessive speed. The speeds specified in Tables 8 and 12 for various lengths of stroke will give satisfactory service. Boiler feed pumps should be installed in duplicate or at least in conjunction with an injector to prevent a shutdown of the plant in case this important auxiliary is put out of commission by some cause.

A boiler hp. being the evaporation of 34.5 lb. water from and at 212° per hr., the actual pounds of water required per hr. for various combinations of feed water temperature and boiler pressure is found by dividing 34.5 by the factor of evaporation corresponding to the actual conditions of operation. In approximate calculations 30 lb. per actual boiler horsepower may be assumed.

The steam consumption of simple direct-acting steam pumps, taking steam full stroke without expansion, ranges from 100 to 175 lb. per *indicated horsepower-hour* of steam end, and for the compound duplex approximately 50 to 100 lb. These figures are greatly exceeded by pumps in poor condition.

As the exhaust steam is almost invariably utilized in a feed water heater there is frequently no necessity for using an economical feed pump, except in cases where there is an excess of exhaust steam from the main units available for this purpose.

TABLE 9

STEAM PUMP TESTS

(Robert Hunt & Company)

Style of Pump	Size, Inches	Strokes per Minute	Cap'y Gallon per Minute Actual	Total Head	% Slip*	Effi-ciency†	Steam Consumption per Hour	
							I.Hp. Steam Cylinder	Delivered W. Hp.‡
Duplex	6 x 4 x 6	79.	20.	191.	16.16	0.78	171.2	196.3
Simplex	6 x 4 x 8	64.7	24.	199.	7.12	0.90	132.4	146.8
Simplex	8 x 5 x 12	154.5	139.3	238.6	1.23	....	.....	82.67
Simplex	8 x 5 x 12	127.7	135.6	241.2	3.84	....	.....	111.74

* Per cent loss due to slip and short strokes.

† The efficiency here referred to is the ratio delivered horsepower/indicated horsepower of steam cylinder. It includes all losses through the pump.

‡ This was calculated from the total steam consumption per hour and the hp. determined from the total head as read by the gages and the actual weight of water pumped.

The steam consumption of direct-acting pumps decreases as the speed is increased. A test on a 16″ x 12″ duplex steam pump at the Mass. Inst. of Tech. gave approximately the following results:

20 strokes per min., 200 lb. per 1 hp.-hour of steam end.
35 strokes per min., 150 lb. per 1 hp.-hour of steam end.
75 strokes per min., 100 lb. per 1 hp.-hour of steam end.

Allow a drop in steam pressure between the boiler and pump of at least 5 lb. per sq. in. in checking for size of steam cylinder of pump. The ratio of the area of steam cylinder to the area of the plunger varies from 2 to 3, so that ordinarily no calculation is necessary for the steam end for boiler feed pumps.

Power Required to Raise Water.

Let Q = cu. ft. per min.
H = total head in ft.
d = density of water.

Then delivered water horsepower is

$$\text{w.hp.} = \frac{Q\,Hd}{33000}$$

The power required to be applied at the pulley brake hp. of a power pump or a centrifugal pump is found by dividing the w.hp. by the mechanical efficiency of the pump, approximately 75% for power pumps and 65% for ordinary centrifugal pumps (Fig. 11 and Table 13).

The i.hp. of the steam end for the flywheel type of pump is approximately equal to the i.hp. water end divided by 0.80.

Percentage of Steam Generated by Boilers Used by Direct-Acting Feed Pumps. Let

I.hp. = Ind. hp. of main engine.
i.hp. = Ind. hp. of pump steam end.
e = efficiency = delivered water hp./i.hp. of steam end.

$$\text{i.hp.} = \frac{\text{Delivered water horsepower}}{\text{eff. of pump}}$$

W = steam consumption main engine per I.hp.-hr.
w = steam consumption pump per i.hp.-hr.
d = density of feed water.

Q = cu. ft. per min. pump must supply boiler

$$= \frac{\text{I.hp.} \times W + \text{i.hp.} \times w}{60 \times d}.$$

D = pump displacement cu. ft. required per min.

$$= \frac{Q}{E} = \frac{\text{I.hp.} \times W + \text{i.hp.} \times w}{60 \times d \times E}$$

p_1 = boiler pressure in lb. per sq. in. gage.

The friction pressure loss and measured head, in lb. per sq. in., of feed line may be assumed as 0.25 p_1, when the layout of the lines is not given. Based on this assumption, $144(1.25\ p_1)$ = lb. per sq. ft. pump must operate against.

$$\text{i.hp.} = \frac{144(1.25\ p_1) \times D}{33000 \times e}$$

Substitute value of D and solve for the indicated horsepower of steam end.

$$\text{i.hp.} = \frac{p_1 \times \text{I.hp.} \times W}{11000 \times e \times d \times E - p_1 w}.$$

$$\text{Per cent total steam generated used by feed pump} = \frac{100\ \text{i.hp.} \times w}{\text{I.hp.} \times W + \text{i.hp.} \times w}.$$

Example. Non-condensing plant with boiler feed pump as the only auxiliary.

Boiler pressure p_1 = 100 lb. gage.

I.hp. of non-condensing engine = 100.

Steam consumption of engine = 32 lb. per I.hp.-hr.

Steam consumption of pump = 125 lb. per i.hp.-hr.

Required the indicated horsepower of steam end of pump and the percentage of the total steam generated that will be used by the pump, $e = 70\%$; $E = 85\%$; $d = 62.4$, corresponding to a feed water temperature of 54° F.

$$\text{i.hp.} = \frac{100 \times 100 \times 32}{11000 \times 0.70 \times 62.4 \times 0.85 - 100 \times 125}$$

$$= 0.81$$

Percentage of total steam generated by boilers used by the feed pump

$$= \frac{0.81 \times 125}{100 \times 32 + 0.81 \times 125} = 0.031 \text{ or } 3.1\%.$$

Size of Steam Cylinders; Direct-Acting Steam Pumps.

Let H = total head in ft.

d = density of water.

p_w = theoretical effective pressure, lb. per sq. in. on water plunger or piston.

$$= \frac{Hd}{144}$$

A = area plunger sq. in.

a = area steam piston sq. in.

p = initial steam pressure at pump, lb. per sq. in. absolute.

p_s = back pressure absolute, ordinarily assumed 15.7 to 16.7 lb., atmospheric exhaust.

$$e = \frac{\text{delivered water hp.}}{\text{i.hp. of steam cylinders}} = \text{pump efficiency.}$$

The delivered horsepower is equal to the *total head* pumped against × weight of water pumped per min./ 33,000.

$p_w A = a(p - p_s)e$ (Plunger thrust = Steam piston thrust × e).

$$a = \frac{p_w A}{(p - p_s)e}$$

It is advisable to allow a drop in the steam pressure between boiler and steam cylinder of approx. 5 to 10 lb. per sq. in.

Compound Direct-Acting Steam Pumps. In this type of direct-acting pump steam is admitted to the high-pressure cylinder for the full stroke and exhausted for the full stroke directly into the low-pressure cylinder.

The steam is worked expansively, due to the fact that the volume of the low-pressure cylinder is several times that of the high-pressure cylinder, the total number of expansions being equal to the ratio, vol. low-pressure cylinder/vol. of high-pressure cylinder.

FIG. 11. CHART FOR DETERMINING BRAKE HORSEPOWER.
(*W. E. Wort, Am. Machinist*, Feb., 1912).

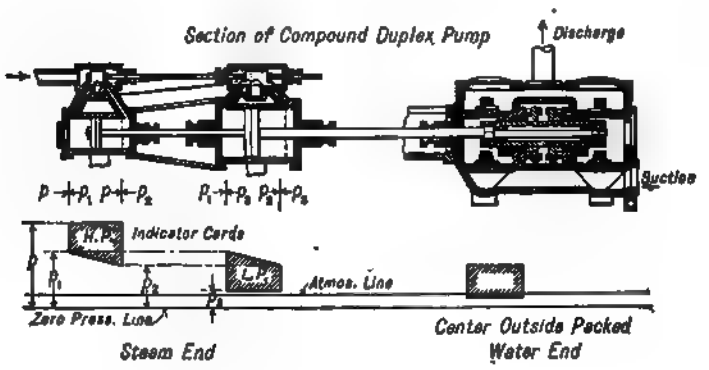

FIG. 12.

Due to the fact that the steam is worked expansively the steam consumption of the compound type is only about one half that of the simple type and when an economical direct-acting steam pump is desirable this type of pump is frequently used. A test on a 10″ × 16″ × 10″ × 16″ compound direct-acting pump, reported by *Robt. Hunt and Company*, gave the following results: Steam consumption (dry) 45.56 lb. per delivered water horsepower-hour. Efficiency 92%. Slip 2.53%.

The steam thrust of a compound pump is variable, due to the fact that the back pressure on the high-pressure piston and the forward pressure on the low-pressure piston is varying. As the pump is not equipped with a flywheel, the maximum thrust on the plunger must always be less than the minimum combined thrust of the high- and low-pressure pistons.

In order to determine the size of steam cylinders required for a given head and initial steam pressure the following formula may be used:

Referring to Fig. 12.

Let p = absolute initial pressure in HP. cylinder.
p_1 = absolute initial pressure in LP. cylinder.
p_2 = absolute terminal pressure in LP. cylinder.
p_3 = absolute back pressure in LP. cylinder.
$V_{HP.}$ = volume of high-press. cyl. in cu. ft.
$V_{LP.}$ = volume of low-press. cyl. in cu. ft.
V_R = volume of receiver.
$C_{HP.}$ = clearance volume HP. cyl. in. cu. ft.
$C_{LP.}$ = clearance volume LP. cyl. in cu. ft.

$\frac{V_{HP.}}{V_{LP.}} = R$ = cylinder ratio.

The following assumptions may be made in approximate direct-acting compound steam pump calculations:

$$C_{HP.} = 0.20 V_{HP.}; C_{LP.} = 0.20\ V_{LP.}; V_R = V_{HP.}$$

To simplify the computations the following substitutions may be made:

Let $V_{HP.} = 1$, then

$$V_R = 1,\ C_{HP.} = 0.20,\ V_{HP.} = RV_{LP.},\ C_{LP.} = 0.20\frac{V_{HP.}}{R}$$

In a problem of this kind p and p_3 are always known or may be assumed with reasonable accuracy. At the beginning of the stroke (Fig. 12) the pressure acting on the front face of the HP. piston is p, that acting on the back face p_1. The pressures acting on the low-pressure piston are p_1 and p_3. At the end of the stroke these pressures are p and p_2 and p_2 and p_3. Of these we know p and p_3. It will be necessary to solve for p_1 and p_2.

Consider that the pistons have completed a stroke to the right. The high-pressure cylinder to the left of the piston as well as the clearance on that side are filled with steam at pressure p. The valve has been shifted and escape of the steam to the receiver is cut off. Up to the instant the valve was shifted the receiver was in communication with the volume of the low-pressure cylinder to the left of the piston. The pressure in the receiver is p_2, that being the final pressure after expansion in the low-pressure cylinder. The clearance space of the low-pressure piston to the right of the piston is filled with steam from the exhaust stroke just completed at a pressure p_3.

In the design of steam engines it is generally assumed that the relative changes of pressure and volume are related according to the equation $pv = const.$ It will also be assumed that when a number of chambers of different volumes and different pressures are put in communication the resulting pressure will agree with the statement,

$$p'v' + p''v'' + p'''v''' = p_r(v' + v'' + v''')$$

Assume that the valve is shifted, placing the high pressure cylinder, the receiver and the clearance space of the low-pressure cylinder in communication. The following equation will hold:

$$p(V_{HP} + C_{HP}) + p_2 V_R + p_2 C_{LP} = p_1(V_{HP} + C_{HP} + V_R + C_{LP}) \quad . \quad . \quad . \quad . \quad . \quad . \quad (1)$$

The valve remaining in the same position, the pistons now begin to move toward the left. The steam is being crowded out of the high-pressure cylinder into the receiver and the low-pressure cylinder. Because of the size of the low-pressure cylinder there is an increase in volume and a decrease in pressure. The new equation is:

$$p_1(V_{HP} + C_{HP} + V_R + C_{LP}) = p_2(C_{HP} + V_R + V_{LP} + C_{LP})$$

Then

$$p_2 = \left[\frac{V_{HP} + C_{HP} + V_R + C_{LP}}{C_{HP} + V_R + V_{LP} + C_{LP}}\right] p_1 \quad . \quad . \quad . \quad . \quad . \quad . \quad . \quad . \quad . \quad . \quad . \quad . \quad (2)$$

Substituting the value of p_2 in equation (1) p_1 is obtained. Substituting p_1 in equation (2) p_2 is obtained.

The theoretical thrust at the beginning and at the end of the stroke may now be obtained.

Let a_{HP} = area of high-pressure piston in sq. in.

a_{LP} = area of low-pressure piston in sq. in.

Then the steam thrust at the beginning of the stroke is

$$a_{HP}(p - p_1) + a_{LP}(p_1 - p_2) \quad . \quad . \quad . \quad . \quad . \quad . \quad . \quad . \quad . \quad . \quad . \quad . \quad (3)$$

and the steam thrust at the end of the stroke is

$$a_{HP}(p - p_2) + a_{LP}(p_2 - p_2) \quad . \quad . \quad . \quad . \quad . \quad . \quad . \quad . \quad . \quad . \quad . \quad . \quad (4)$$

If a 15% loss is assumed then 85% of (4) will give the maximum permissible thrust on the water piston or plunger.

Example. Let it be required to determine the total head H against which a 10″ (HP dia.) × 16″ (LP dia.) × 10″ (dia. plunger) × 16″ (stroke) compound direct-acting pump will operate for the following conditions: $p = 116$, $p_2 = 14.7$, $C_{HP} = 0.20\ V_{HP}$, $C_{LP} = 0.20\ V_{LP}$, $V_R = V_{HP}$, $\frac{V_{LP}}{V_{HP}} = \frac{16^2}{10^2} = 2.56$. Substituting the above values in equation (1) in terms of the high-pressure cylinder volume

$$V_{HP} = 1,\ V_{LP} = 2.56,\ C_{LP} = 0.512,\ V_R = 1$$

$$116\ (1. + 0.20) + 0.635\ p_1 \times 1 + 14.7 \times 0.512 = p_1\ (1. + 0.20 + 1. + 0.512)$$

$$p_1 = 70.6$$

$$p_2 = \left(\frac{1. + 0.20 + 1. + 0.512}{0.20 + 1. + 2.56 + 0.512}\right) \times 70.6 = 44.8$$

Theoretical steam thrust at beginning of stroke is:

$$78.54\ (116 - 70.6) + 201.06\ (70.6 - 14.7) = 14{,}805 \text{ lb.}$$

Theoretical steam thrust at end of stroke is:

$$78.54\ (116 - 44.8) + 201.06\ (44.8 - 14.7) = 11{,}644 \text{ lb.}$$

The expected or actual effective minimum thrust at water end will be:

$$0.85 \times 11{,}644 = 9897 \text{ lb.}$$

$$H = \frac{9897}{78.54 \times 0.433} = 291 \text{ ft.}$$

Duty. The term duty is often used as an efficiency standard in connection with steam-driven pumping machinery. It refers to the number of ft.-lb. of delivered work done by the pump for a certain quantity of heat energy supplied. Duty may be defined either as the number of ft.-lb. of delivered work done in lifting the liquid per 1,000,000 B.t.u. used in driving the pump; or it may be defined as the number of ft.-lb. of work per 1,000 lb. of dry steam used.

The first form is the better. Duty is then equal to $\frac{60 \times W \times H}{w(x_1r_1 + q_1 - q_2)}$

in which W = lb. of water pumped per min.
H = actual total head on the pump in ft.
w = lb. of steam used per hr.
$x_1r_1 + q_1$ = heat content above 32° F. per lb. of steam supplied.
q_2 = the heat of the liquid per lb. of steam at the pressure in the exhaust.

FIG. 13.

TABLE 10

DIMENSIONS OF DEAN BROS. DUPLEX PUMPS

(Outside Packed Plungers)

Dimensions	6 x 4 x 6	7 x 4½ x 10	8 x 5 x 12	9 x 6 x 12	10 x 7 x 12
A	14 1/4	18	19	20	21
B	2 1/2	3	4	4	4 1/2
C	12 1/2	16	17	18	19
D	5/8	5/8	3/4	3/4	3/4
E	10	12	14	20	21
F	8	10	12	16	19
G	9 3/4	9 1/2	10 1/2	11	11
H	39 11/16	51 11/16	58 1/4	68	85
I	11 1/4	12 3/4	13 1/8	19 1/4	22 3/4
J	1 3/8	2	2	2 1/2	2 1/2
K	4	5	5 3/4	6	6 1/2
L	4 1/2	5 1/2	6	6	7
M	1	1 1/2	1 1/2	2	2
N	12 3/4	14 1/2	20	21	24 1/4
O	1/2	1/2	1 1/2	1 3/4	1 1/2
P	3	4	5	5	6
Q	11	12	11	12	14
R	12 1/4	13	13	13	14
S	2	3	4	4	5
T	2 1/2	3 1/2	6 3/4	6 3/4	9
U	12 1/2	18 3/4	21 1/2	22 3/4	26 1/4
V	6 1/8	8	9 1/2	9 3/4	9 3/4
W	63 9/16	81 9/16	98 3/4	98 3/4	98 3/4
X	17 3/4	22 1/2	26	26	26
Y	20 3/4	21 3/4	28	29 1/4	34 1/4
Z	6 1/2	7	11 1/4	11 3/4	14 1/2
HH	13 1/8	16 1/4	18 3/4	22 1/4	23 1/8
WW	15 1/8	18 1/4	21 1/8	23 1/2	25 1/8

FIG. 14.

TABLE 11

DIMENSIONS OF DEAN BROS. DUPLEX PUMPS

(Packed Pistons)

Dimensions	4 x 2½ x 5	5½ x 3½ x 5	6 x 4 x 6	7 x 4½ x 10	8 x 5 x 12	9 x 6 x 12	10 x 7 x 12
A		13¼	14½	18	19	20	21
B		2½	2½	3	4	4	4½
C		11½	12½	16	17	18	19
D		½	½	¾	¾	¾	¾
E		13¼	14½	18	19	20	21
F		11½	12½	16	17	18	19
G		2½	2½	3	4	4	4½
H		26	29 9/16	37 13/16	48½	48½	49½
I		10 5/16	11½	12¾	18½	19½	22½
J		1¼	1½	2	2	2½	2½
K	3	3¼	4	5	5¾	6	6½
L	3½	4	4½	5½	6	6	7
M	½		1	1½	1¾	2	2
N	9½		12½	14½	20	21	24½
O	¾		¾	¾	1½	1	1½
P	2		3	4	5	5	6
Q	5		5¾	7¾	9½	9¾	10¾
R	5		5¾	7¾	10	10	11
S	1¼		2	3	4	4	5
T	2½		2½	3¼	4½	4½	5½
U	7½		9½	10	14½	15½	19½
V	4½		6½	8	9¾	9½	9½
W	24½		42 13/16	55 1/16	64	69½	71½
X	5½		7½	9½	11¼	11½	12½
Y	18	15½	17½	18¾	24	26½	31½
Z	4½	5½	6½	7	11½	11½	14½
HH	9½	12½	13½	16½	18½	21½	23½
WW	10½	14¾	15¾	19	21½	23½	25¾

CENTRIFUGAL PUMPS

As the name implies, the pressure generated by the pump is due, largely, to the action of centrifugal force imparted to the water by means of a bladed impeller rotated in an enclosed casing. The centrifugal pump as now constructed in its several forms is adapted to practically all classes of pumping service for which reciprocating pumps are used with the possible exception of high-pressure hydraulic press and similar service.

It is particularly well adapted for direct connection to engines, turbines and motors. It has only one moving part, the impeller, no valves to get out of order, and is therefore subject

TABLE 12

DUPLEX STEAM DIRECT-ACTING BOILER FEED PUMPS

Capacities and Prices

Size Diameter Steam Cylinder x Diameter Water Cylinder x Stroke, Inches	Recommended Strokes per Minute	Actual Deliveries Based on 80 P. Cent Volumetric Efficiency, Pounds per Hour	Capacity Boilers Pump Will Serve, Horsepower	Weight, Pounds	Net Price at Factory
Piston Pattern					
3 x 2 x 4	50	2,174	50	210	$31
4½ x 3 x 4	50	4,890	100	350	51
5¼ x 3½ x 5	45	7,487	150	490	69
6 x 4 x 6	45	11,737	250	640	80
7 x 4½ x 7	40	15,405	325	990	112
7 x 5 x 7	40	19,018	400	1,025	112
7 x 4½ x 10	40	22,006	450	1,375	158
7 x 5 x 10	40	27,168	575	1,375	161
8 x 5 x 12	40	32,602	675	1,610	173
10 x 6 x 12	40	46,946	1,000	2,475	250
Plunger Pattern Outside Center Packed					
4½ x 3 x 4	50	4,890	100	330	$69
5¼ x 3½ x 5	45	7,487	150	515	88
6 x 4 x 6	45	11,737	250	725	108
7½ x 5 x 6	45	18,338	400	1,300	127
7½ x 4½ x 10	40	22,006	450	2,400	256
10 x 6 x 10	40	39,122	800	3,200	344
12 x 7 x 10	40	53,250	1,100	4,000	440

NOTE.—If pump is to be brass fitted add 15 per cent to above prices.

to little depreciation. The following facts, however, should be borne in mind, when selecting a centrifugal pump. The efficiency of a centrifugal pump is quite a variable quantity, depending primarily upon the head against which it operates. Centrifugal pumps are rated by the manufacturer at or near their maximum efficiency at a definite speed at which there is but one head under which the pump will operate at maximum efficiency. Therefore if the pump is expected to deliver the tabulated quantity of water at the speed and the power consumption stated, the conditions must be reproduced in practice under which the pump was originally rated.

The above mentioned points will be apparent from an inspection of the characteristic curves of a centrifugal pump, Fig. 15. This diagram shows the relation between the capacity, head and horsepower for a *fixed speed*. The rated speed having been chosen after a series of tests run at various speeds to determine the speed which gives the highest efficiency.

It is essential, to the proper selection of a centrifugal pump and its drive, that the method of rating this type of pump be clearly understood.

Attention is directed to the comparatively low efficiency of the smaller sizes of centrifugal pumps, and such sizes are to be avoided if a reciprocating pump may be used for the purpose at hand.

Efficiency of Centrifugal Pumps. The efficiency (water horsepower output/brake horsepower input) naturally varies somewhat with the different designs of various makers. The following table of efficiencies compiled by *M. W. Ehrlich* and published in the "Practical Engineer," September 1, 1915, is the result of an extended study of the subject and is based on the averages of a large number of tests of various makes, including both the volute and turbine types, when operated at their rated capacity.

TABLE 13

PUMP SIZES, CAPACITIES AND EFFICIENCIES

Size of Pump,* Inches	Capacities, Gallons per Minute at		Efficiency, Per cent	Size of Pump,* Inches	Capacities, Gallons per Minute at		Efficiency, Per cent
	10 Ft. Vel. per Second †	12 Ft. Vel. per Second †			10 Ft. Vel. per Second †	12 Ft. Vel. per Second †	
1	25	...	27	5	612	734	59
1½	55	...	35	6	881	1,058	62
2	98	...	43	8	1,567	1,880	65
3	220	264	50	10	2,448	2,938	67
4	392	470	55	12	3,525	4,230	69

* Also size of discharge outlet and smallest diameter suction inlet.
† Velocity through discharge outlet.

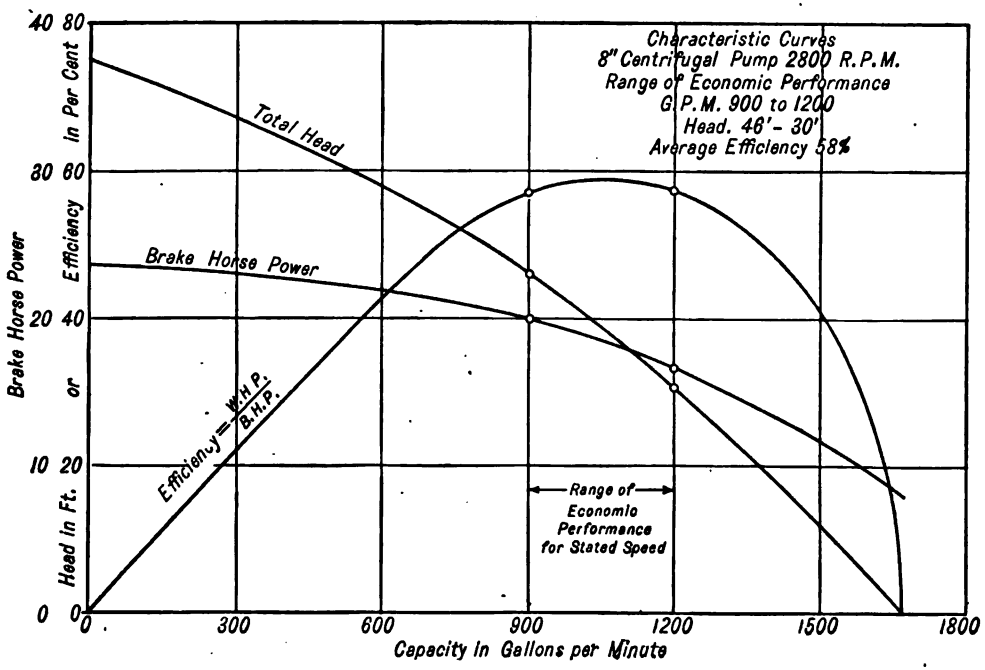

FIG. 15.

Volute Pump. The ordinary type of centrifugal pump, Fig. 16, with a single impeller and without guide vanes in the casing, the latter having the shape of a volute curve, is known as a volute pump.

The closed impeller volute pump is usually provided with a double inlet which removes any end thrust that results when only a single side inlet is used.

This type of pump is used for heads ordinarily not exceeding 65 ft. to 100 ft., depending on size of pump, as beyond this point the efficiency rapidly falls off.

Turbine or Multi-Stage Pumps (Fig. 17). For higher heads or pressures, the impeller or runner is of the enclosed type and guide or diffusion vanes are introduced in the casing in order to direct the flow from the runner and increase or raise the efficiency by transforming a larger proportion of the energy, which exists in the kinetic form at the outlet of the impeller to the pressure form

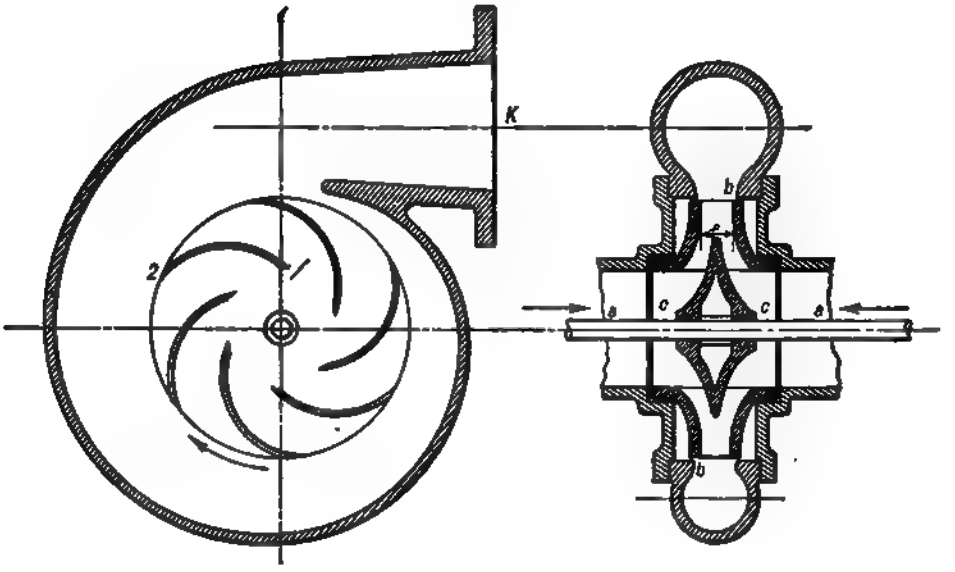

FIG. 16. VOLUTE TYPE PUMP.

FIG. 17. TURBINE TYPE PUMP—SINGLE STAGE.

and reduce the loss of head in the pump casing to a minimum. A single runner is now used for total heads up to and including 150 ft. or 65 lb. per sq. in. pressure. The efficiency of this type, single stage, varies from 50 to 70% when operated at the rated capacity and head.

For pressures above 50 lb. per sq. in. the pump is constructed with two or more runners or stages depending upon the pressure. Approximately 50 lb. per sq. in., or 125 ft. head, for each stage.

Multi-stage pumps direct connected to steam turbines or motors are now largely employed

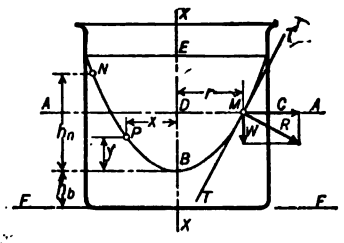

FIG. 18. PARABOLOID OF REVOLUTION.

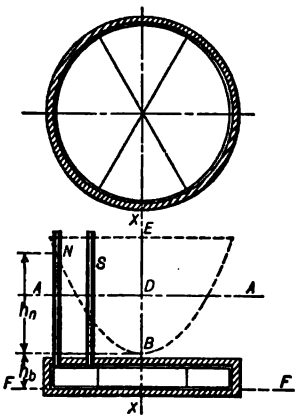

FIG. 19. ELEMENTARY CENTRIFUGAL PUMP WITH THROTTLE VALVE CLOSED.

for boiler feeding and similar high-pressure service. The general arrangement, operation data, and overall dimensions are given by Fig. 32 and Table 21.

General Theory of Centrifugal Pumps. If the cylindrical vessel, Fig. 18, be filled with a liquid to a level AA and then set in rapid rotation on its axis XX, the liquid will finally assume the same angular velocity as the vessel. Consider the small particle of liquid M, whose weight is say W. It is at a distance r from the axis and will be subject to a centrifugal force $C = W a^2 r/g$, where a is the angular velocity and W the force due to its own weight. The resultant will be R. If the surface of the liquid at M is to remain in equilibrium under these forces the tangent to the surface at M, TT, must be at right angles to the resultant R.

The equation of this surface may be established as follows: The point P is at a distance x from the axis and at a distance y from an axis, which can, for convenience, be taken through the lowest point of the surface at B. If the ratio between y and x is known over the whole range—that is, from the axis to the walls of the vessel—the equation of the curve is determined. Now from the triangle of forces

$$\frac{dy}{dx} = \frac{\text{Centrifugal Force}}{W} = \frac{W a^2 x}{g W} = \frac{a^2 x}{g}$$

$$dy = \frac{a^2}{g}\, x\, dx$$

and

$$y = \int_0^x \frac{a^2}{g}\, x\, dx = \frac{a^2}{2g}\, x^2$$

That is, the resulting surface will be a paraboloid of revolution.

The head on the base under a point, as N, will evidently be greater by h_n than the head h_b under B. This head is due solely to the peripheral velocity, v_n at N, because the position

of the particle N is due to the energy of rotation. The potential energy imparted to the particle is Wh_n and this must be equal to the head corresponding to the peripheral velocity of u_n.

Suppose the open vessel just considered is converted into a closed vessel (Fig. 19). A paddle-wheel for rotating the liquid at a uniform velocity is provided. Its object is simply to rotate the liquid at a uniform velocity, not to displace it. Suppose when the liquid is quiet it stands at the level AA in the manometers. Evidently the head on the whole base will correspond to the difference between the levels AA and FF as it did in the previous case.

Now let the paddle-wheel be set in rotation so that the velocity of rotation will be exactly the same as it was in the case of the open vessel. If the piezometer at N is at the same distance from the axis as the point N in the open vessel and if in both cases the linear velocity is u_n, the head in the piezometer will be as before $h_n + h_b$. The head at B will be h_b. In fact, there will be a tendency toward a formation of the same paraboloid of revolution as in the open vessel, so that if another piezometer be inserted at S, the liquid will rise in it up to the point where the paraboloid of revolution (shown in dotted lines) crosses the line of the piezometer.

At N, then, we have a head $h_n = \frac{u_n^2}{2g}$, and at S a head, $h_s = \frac{u_s^2}{2g}$. The increase of head between these two points is $\frac{u_n^2 - u_s^2}{2g}$. Note that there has been no flow of liquid between the vanes, the water has simply been rotating. The case is analogous to a centrifugal pump with the discharge valve closed, and, theoretically, the expression for the increase in head could be used to determine the shut-off pressure of a centrifugal pump if the inlet and outlet diameters of the vanes and the speed of rotation were known.

Fig. 16 is a diagrammatic section of a single stage double suction pump, with a horizontal instead of a vertical shaft, showing the customary arrangement of vanes, etc. Consider the two points 1 and 2. If the throttle valve at K is closed and if we denote the peripheral velocities at 1 and 2 by u_1 and u_2 respectively, a change of head, or change of energy per lb., equal to $\frac{u_2^2 - u_1^2}{2g}$ will be obtained.

If the throttle valve is opened this difference of head will cause a flow. The water enters the runner from either side, at aa, passes through the channels between the vanes or blades and enters the volute through the annular passage or whirlpool chamber bb. It leaves the volute or casing at K. Consider the points 1 and 2 on the runner (Fig. 20). Suppose the water in entering at "a" has a velocity c_1, and that it still has that velocity as it enters the vanes. The direction of flow will be radial, and in order that there shall be no shock at entry, to the vanes the components of the radial velocity u_1 and w_1 must be of such size that c_1 will be radial in the theoretical case.

Actually the water as it enters through the suction inlet will be in contact with the rotating shaft and hub and will start to whirl. The water will receive a velocity of rotation increasing with the distance from the axis. The effect will be to swerve c_1 slightly from the radial direction as shown in Fig. 20. For the present this irregularity will be neglected.

At 2 the above reasoning is reversed. The circumferential velocity is u_2 and the relative velocity w_2. These have as their resultant c_2, which represents the absolute velocity with which the water leaves the runner.

It has been shown how the head produced by a pump when there is no flow may be calculated theoretically. When there is a flow additional terms must be considered. The law of conservation of energy will be applied first to the flow inside the runner channels themselves, disregarding for the moment what changes of energy there may be outside the runner.

The energy in one lb. of water at 1 is

$$h_1 + \frac{w_1^2}{2g}$$

where h_t is the static or bursting pressure at that point. During the passage of the water through the wheel, evidently, from what has already been said, there has been added to each lb. of water the energy $\frac{u_2^2 - u_1^2}{2g}$. Besides, there has, of course, been friction representing an energy loss which can be represented by a head h_r.

At 2 every lb. of water contains the energy

$$h_2 + \frac{w_2^2}{2g}.$$

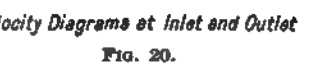

Velocity Diagrams at Inlet and Outlet

FIG. 20.

From the above then $$h_2 + \frac{w_2^2}{2g} = h_1 + \frac{w_1^2}{2g} + \frac{u_2^2 - u_1^2}{2g} - h_r \quad \ldots\ldots\ldots\ldots (1)$$

Transpose the equation to read

$$h_2 - h_1 = \frac{u_2^2 - u_1^2}{2g} + \frac{w_1^2 - w_2^2}{2g} - h_r \quad \ldots\ldots\ldots\ldots (2)$$

and an equation for the change in static head or bursting pressure is the result.

The change in energy due to the fact that the absolute velocity on leaving is different than the absolute velocity on entering the runner is still to be accounted for.

The absolute energy in a lb. of water at 1 is:

$$h_1 + \frac{c_1^2}{2g}$$

and at 2 it is: $$h_2 + \frac{c_2^2}{2g}$$

The change of absolute energy per lb. is therefore:

$$\left(h_2 + \frac{c_2^2}{2g}\right) - \left(h_1 + \frac{c_1^2}{2g}\right) = \frac{c_2^2 - c_1^2}{2g} + (h_2 - h_1) \quad \ldots\ldots (3)$$

The total change of energy or energy added to a lb. of a liquid passing through the runner is:

$$L = \frac{c_2^2 - c_1^2}{2g} + h_2 - h_1 + h_r \quad \ldots\ldots\ldots\ldots (4)$$

But from equation (2) $$h_2 - h_1 + h_r = \frac{u_2^2 - u_1^2}{2g} + \frac{w_1^2 - w_2^2}{2g} \quad \ldots\ldots\ldots\ldots (5)$$

Therefore $$L = \frac{c_2^2 - c_1^2}{2g} + \frac{u_2^2 - u_1^2}{2g} + \frac{w_1^2 - w_2^2}{2g} \quad \ldots\ldots\ldots (6)$$

The energy, in ft.-lb., put into one lb. of a liquid is at the same time the total height or head through which the liquid could be raised by that energy. It is therefore permissible to write

$$H = \frac{c_2^2 - c_1^2}{2g} + \frac{u_2^2 - u_1^2}{2g} + \frac{w_1^2 - w_2^2}{2g} \quad \ldots\ldots\ldots (7)$$

This equation is far from satisfactory for practical use, for the only terms in it that can actually be determined as a basis for design are u_1 and u_2, which can be determined from the relationship $u = \frac{2\pi rn}{60}$, where u is the peripheral velocity in ft. per sec., r the radius in ft.

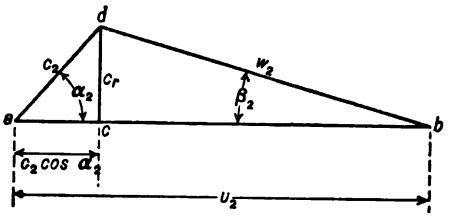

Outlet Velocity Diagram

FIG. 21.

and n the speed of rotation in revolutions per minute. To arrive at something tangible c and w must be eliminated.

Redraw the diagram at point 2 in Fig. 20 as shown in Fig. 21. Evidently

$$w_2^2 = c_2^2 + u_2^2 - 2u_2c_2 \cos \alpha_2$$

and by analogy

$$w_1^2 = c_1^2 + u_1^2 - 2u_1c_1 \cos \alpha_1$$

$$H = \frac{2u_2c_2 \cos \alpha_2 - 2u_1c_1 \cos \alpha_1}{2g} \quad \ldots\ldots\ldots (8)$$

For purposes of design it is accurate enough if we consider that angle $\alpha_1 = 90°$, that is, that the water enters the runner radially. Then $\cos \alpha_1 = 0$ and

$$H = \frac{u_2c_2 \cos \alpha_2}{g} \quad \ldots\ldots\ldots (9)$$

One of the things usually known to the designer, or at least assumed by him, is the outlet angle of the runner β_2. It can be introduced into our equation as follows:

$$\frac{c_2}{u_2} = \frac{\sin \beta_2}{\sin [180° - (\alpha_2 + \beta_2)]} = \frac{\sin \beta_2}{\sin \alpha_2 \cos \beta_2 + \cos \alpha_2 \sin \beta_2}$$

$$c_2 \cos \alpha_2 = \frac{u_2 \cos \alpha_2 \sin \beta_2}{\sin \alpha_2 \cos \beta_2 + \cos \alpha_2 \sin \beta_2} = \frac{u_2}{\tan \alpha_2 \cot \beta_2 + 1} \quad \ldots\ldots\ldots (10)$$

Substituting in equation (9) $$H = \frac{u_2^2}{g}\left(\frac{1}{\tan \alpha_2 \cot \beta_2 + 1.}\right) \quad \ldots\ldots\ldots (11)$$

The theoretical velocity required to produce a certain head is

$$u_2 = \sqrt{g\ H\ (\tan \alpha_2 \cot \beta_2 + 1} \quad \ldots\ldots\ldots\ldots \quad (12)$$

In this equation u_2 and $\cot \beta_2$ are fixed quantities, but $\tan \alpha_2$ is a function of the quantity of water delivered by the pump. For if the quantity of water delivered by the pump changes, c_r will change in proportion. Consequently α_2 will vary. To simplify matters, the designer writes the equation

$$u_2 = K_u \sqrt{2gH};\ K_u = \frac{u_2}{\sqrt{2gH}};\ H = \frac{u_2^2}{2gK_u^2} \quad \ldots\ldots\ldots \quad (13)$$

and determines the values of K_u over the whole range of the pump at a given speed by actual test. By proper choice of the coefficient K_u, which has been calculated from a test of a similar pump, diameter and speed, at which another runner of similar type must be run for any desired head, may be determined.

The quantity of water delivered by a pump is known as soon as c_r and the circumferential outlet area of the runner are known. The value of c_r is usually determined from data taken on the test floor. As the quantity of water delivered varies, the head on the pump varies and the following equation may be written.

$$c_r = K_{cr} \sqrt{2gH};\ K_{cr} = \frac{c_r}{\sqrt{2gH}};\ H = \frac{c_r^2}{2gK_{cr}^2} \quad \ldots\ldots\ldots \quad (14)$$

and the values of K_{cr} over the whole range of the pump under test can be determined and kept in the form of curves as shown by Fig. 22.

It is frequently necessary to calculate what a pump will do when run at another speed than the one at which the test was made. From equation (13) it will appear that the head varies

FIG. 22.

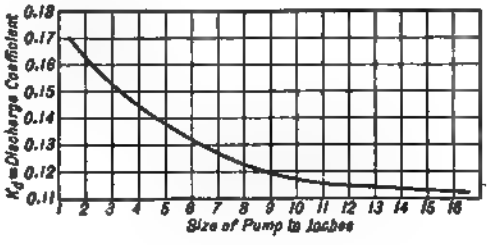

FIG. 23.

as the square of the speed. The quantity delivered varies as c_r and c_r varies with the speed u_2. Both of these statements hold, however, only within reasonable limits. The power input varies as the cube of the speed.

The above theory holds for any type of single-stage pump. Multi-stage pumps are simply single-stage pumps in series, although the constants used in designing them are different than those used with single-stage pumps. The head to be obtained from two runners in series is twice the head to be obtained from one alone. The quantity of water delivered is, however, that to be expected from one runner.

The following matter, referring to Figs. 22 to 25 inclusive, was taken from the article "A Rating Chart for Centrifugal Pumps," by *L. G. Bradford*, appearing in the "Engineering News," Vol. 72, No. 8.

When a new line of pumps is to be designed, a pump having the desired shape of characteristic is tested, and the "$K_u - K_{cr}$" characteristic is plotted as shown in Fig. 22. Next, the

values of the coefficient of discharge velocity for the various sizes of pumps to be made are assumed. The values of these discharge coefficients,

$$K_d = \frac{V_d}{\sqrt{2gH}} \quad \ldots\ldots\ldots\ldots\ldots\ldots \quad (1)$$

where V_d = velocity of water in the discharge pipe in feet per second, are such as former experience has shown to give good results. Fig. 23 shows graphically how the values of the discharge coefficient may vary with the size of the pump. Having assumed the discharge coefficient, the

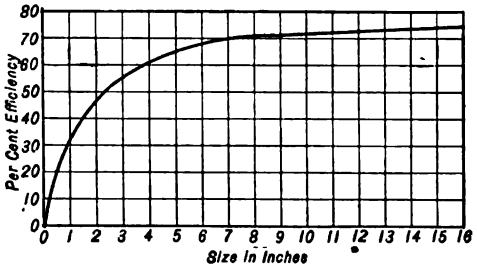

FIG. 24.

capacity of a pump for a unit head can be computed. The following notation will be used:

Q = pump capacity, cubic feet per second;

N = r. p. m.;

K_d = discharge coefficient = $\dfrac{V_d}{\sqrt{2gH}}$

d = diameter of discharge, inches;

H = head per stage;

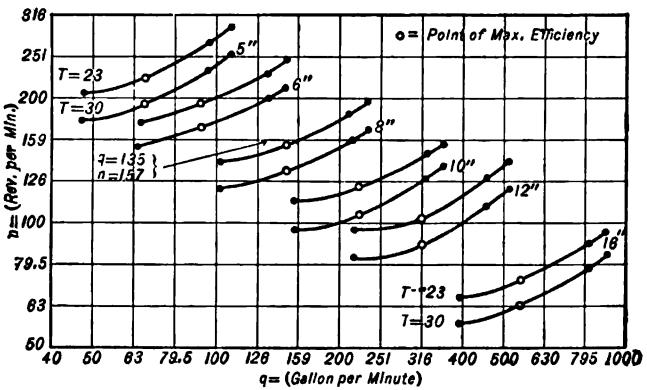

FIG. 25.

A = area of discharge, square feet, = $\dfrac{0.7854\ d^2}{144}$;

q = capacity of pump at unit head = $\dfrac{\text{gal. per min.}}{\sqrt{H}}$

n = speed of pump at unit head = $\dfrac{r.\,p.\,m.}{\sqrt{H}}$;

D_2 = outside diameter of vanes, inches;

W_2 = width of impeller passage at exit, inches;

T = type of impeller = $\dfrac{D_2}{W_2}$; . . . . . (2)

Now

$$Q = \frac{q\sqrt{H} \times 231}{1728 \times 60} \quad \ldots\ldots\ldots\ldots \quad (3)$$

also $V_d = \dfrac{Q}{A}$, and by substitution,

$$V_d = \frac{q\sqrt{H} \times 231 \times 144}{1728 \times 60 \times 0.7854\, d^2} \quad \ldots\ldots\ldots\ldots \quad (4)$$

Now, by dividing both sides of this equation by $\sqrt{2gH}$, simplifying and remembering that $K_d = \dfrac{V_d}{\sqrt{2gH}}$ we get

$$K_d = \frac{q}{19.6\, d^2} \text{ or } q = 19.6\, K_d\, d^2. \quad \ldots\ldots\ldots\ldots \quad (5)$$

From this equation the value of the discharge at unit head, or, as it is more frequently called, the "unit capacity," may be computed as soon as values are assigned to K_d and d. The speed in feet per second at unit head, or "unit speed," is found as follows:

$$K_u = \frac{\pi D_2 N}{60 \times 12 \times \sqrt{2gH}} \therefore N = \frac{K_u \times 12 \times \sqrt{2gH} \times 60}{3.14 \times D_2}$$

Dividing by $\sqrt{H}$ and reducing,

$$n = \frac{K_u \times 1838}{D_2} \quad \ldots\ldots\ldots\ldots \quad (6)$$

Were the values of K_u and D_2 known, the chart could now be laid out. But D_2 is usually unknown unless the chart is being drawn for an existing line of pumps. Of course D_2 could be assumed, but it is usually preferable to assume the type T of the impeller.

Assuming that 85% of the total area of the periphery of the impeller is available for the passage of water, we have

$$W_2 = \frac{gal.\ per\ min. \times 231}{C_r \times 12 \times 60 \times \pi D_2 \times 0.85}$$

Dividing the numerator and denominator on the right by $\sqrt{H}$

$$W_2 = \frac{0.015\, q}{K_{cr} D_2} \quad \ldots\ldots\ldots\ldots \quad (7)$$

Substituting $\dfrac{D_2}{T}$ for W_2

$$D_2 = \sqrt{\frac{0.015\, q\, T}{K_{cr}}} \quad \ldots\ldots\ldots\ldots \quad (8)$$

Placing this value for D_2 in equation (6) there results,

$$n = \frac{15{,}016\, K_u \sqrt{K_{cr}}}{\sqrt{q\, T}} \quad \ldots\ldots\ldots\ldots \quad (9)$$

Values for q and n may be obtained for any size of pump using any type of impeller, the values of K_u and K_{cr} being taken from the test on which the line is based. Four values of q and n are usually computed for each impeller represented. The points usually taken are the point of maximum efficiency, 90% of maximum efficiency—at a capacity lower than that at which maximum efficiency is reached, and 95% and 90% of maximum efficiency—at greater capacities than for maximum efficiency.

Example. The use of these formulas can best be made clear by sample computations. Take, for example, the case of a 6-in. pump.

$d = 6$ in.;
$K_d = 0.132$ (based on tests of existing pumps which give good efficiency. Fig. 23);
$T = 23$ (assumed);
$K_u = 1.25$ (from test, Fig. 22);
$K_{cr} = 0.22$ (from test, Fig. 22);
Calculation of q and n for 100% of Maximum Efficiency.
Maximum Efficiency = 67% (from test, see Fig. 22).

$$q = 19.6 \times 0.132 \times 6 \times 6 = 93$$

$$n = \frac{15{,}016 \times 1.25 \times 0.47}{46.2} = 192$$

Calculation of Other Than the Point of Maximum Efficiency. Since K_u and K_{cr} are respectively directly proportional to the peripheral velocity of the impeller and the radial velocity of the water, it follows that n and q are, for a given pump, directly proportional to K_u and K_{cr}, respectively. If, therefore, it is desired to find the values of q and n with the pump operating at other than maximum efficiency, it is necessary only to write the following equations and solve.

$$n_x = \frac{n_{100} \times K_{ux}}{K_{u_{100}}} \quad \ldots\ldots\ldots\ldots\ldots\ldots \quad (10)$$

$$q_x = \frac{q_{100} \times K_{crx}}{K_{cr_{100}}} \quad \ldots\ldots\ldots\ldots\ldots\ldots \quad (11)$$

If it is desired to find the values of q and n when the pump is operating at 90% of its maximum efficiency, and delivering less water than it would at maximum efficiency,

$$\text{efficiency} = 0.90 \times 0.67 = 0.603$$

By reference to the impeller-velocity characteristic (Fig. 22), it is seen that the values of K_u and K_{cr} corresponding to an efficiency of 60.3% and a minimum discharge are $K_u = 1.15$ and $K_{cr} = 0.155$. Substituting in equations (10) and (11),

$$n_{90} = \frac{192 \times 1.15}{1.25} = 177 \qquad q_{90} = \frac{93 \times 0.155}{0.22} = 65.5$$

The points on the front of the curve, that is when the pump is discharging more than its normal amount of water, are found in a similar manner. Fig. 25 shows such a chart plotted for a complete line of pumps, sizes varying from 5 to 16 in., and for two types of impeller for each size.

Use of Chart. When an order for a pump is received the values of q and n are immediately calculated from the conditions of operation, by means of the equations $q = \frac{\text{gal. per min.}}{\sqrt{H}}$ and $n = \frac{\text{r.p.m.}}{\sqrt{H}}$, and the point plotted. The impeller having the next value of n below that found is taken, and if the difference is large the tips of the vanes are cut back. (This is done to bring the speed up to that required. It is readily seen that cutting back the vanes increases the speed

when it is remembered that for any given impeller the outside diameter of the vanes must attain a certain peripheral velocity in order to produce a certain head.)

Suppose, for example, that an order came in for a pump to deliver 1500 gal. per min. against a head of 250 ft. when running at a speed of 1760 r.p.m. The pump will obviously consist of two stages, for while a head of 250 ft. per stage is possible, it can usually be attained only at the sacrifice of efficiency. The head per stage is then 125 ft.

$$q = \frac{1500}{\sqrt{125}} = 135 \quad n = \frac{1760}{\sqrt{125}} = 157$$

The point determined by these values of q and n is then plotted as shown on Fig. 25. The impeller chosen will be the one having the next highest values of q and n. In this case an 8-in. pump having a type 23 impeller would be chosen and the vanes cut back a trifle. The pump

FIG. 26. ARRANGEMENT OF APPARATUS FOR CENTRIFUGAL PUMP TEST.

would operate at about 98 per cent of its maximum efficiency. From Fig. 24, it is seen that the maximum efficiency of an 8-in. pump operating at 125 ft. per stage is 71 per cent. The efficiency of the pump selected would therefore be about 71 per cent $\times$ 0.98 = 69.5 per cent.

Testing and Rating Centrifugal Pumps.* In testing centrifugal pumps the main measurements usually made are:

1. Power input.
2. Quantity of water pumped.
3. Total head.
4. Speed.

Power Input. The pump may be either direct-connected to an electric motor or driven by belt from a transmission dynamometer which in turn is driven by an electric motor.

In the first case, if it is a direct-current machine, the motor will have to be tested at the various speeds at which it is to be run and at each speed a curve is to be drawn showing the ratio between the brake horsepower developed and the watt input into the armature over the whole range of power which the motor may have to develop at that particular speed. It is well to keep the field current at some constant value over the whole range for any given speed and to take care that when the motor is operated at this speed the same field current is maintained. Knowing the electrical input into the armature, it is an easy matter then to choose the corresponding brake horsepower from the curve.

* The authors are indebted to *Edwin Frank* for the following matter.

The Lewis type dynamometer affords another means of measuring the power input into the pump. It is shown at D in Fig. 26.

Power is transmitted from the motor M to the fixed shaft L. On this shaft is mounted the gear R which communicates its motion to the gear wheel R', mounted on the shaft L'. The latter rotates in a lever or cradle Q hinged to the main frame by means of a steel plate spring at A. The shaft L' transmits its motion through two Hooke's joints to the fixed shaft on which the pulley G is mounted. From this pulley the power is transmitted by belt to the pump.

Let p = the effective belt pull.

r = radius of the pulley G.

When power is transmitted the effective torque or moment is pr. This torque is equal to the moment $p'f$. The following relations can be written:

$$pr = p'f$$

$$p' = \frac{a+b}{a}\,p''$$

$$pr = p''\left(\frac{a+b}{a} \times f\right)$$

$$p'' = \frac{d}{c}W$$

$$pr = W\left(\frac{d}{c} \times \frac{a+b}{a} \times f\right)$$

$$p = W\left(\frac{d}{c} \times \frac{a+b}{a} \times \frac{f}{r}\right) = W \times \text{constant}.$$

The weight W can be moved in and out on the lever d which is provided with a scale graduated to read directly the pounds of effective pull on the pulley G. Theoretically, then, the horsepower input into the pump is

$$\frac{p \times 2\pi r \times n}{33000}$$

There is a small loss in the belt which should not exceed 5 per cent of the power transmitted.

The quantity of water pumped may be determined either by the V-notch weir method, or by means of a Venturi meter.

The total head will be determined as described in the general notes on pump tests. Instead of a suction gage, a mercury manometer is generally used, as it is far more sensitive. Every reading taken must be corrected to give the pressure at the center of the pump. This means that if the manometer is below the center line of the pump, a head of water equal to the vertical distance between the horizontal center line of the pump and the top of the mercury on the side of the manometer, subject to the vacuum, must be added to the head in ft. of water corresponding to the difference in level of the mercury. If the manometer is above subtract that head from the indicated suction head.

The revolutions per minute of the pump may be measured by both tachometer and speed counter—one to be used quickly to adjust the speed of the pump, the other to serve as a check.

General Method of Conducting Test. Fig. 26 shows the arrangement of the testing apparatus for a test in which the Lewis dynamometer and the Venturi meter are used. M is the motor transmitting power by belt to the dynamometer D, from where it is transmitted once more by belt to the pump C. The pump draws in water from the sump tank and delivers it past the throttle valve T into the discharge main. After passing through the Venturi meter V the water is returned to the sump tank.

The water in the system will have a tendency to heat because the various heads on the

pump are produced by throttling with the valve T. To get a maximum amount of water in the system the tank S must be filled quite to the top at the beginning of the test. To help cool the water further a cock is provided at E, permitting some of the hotter water to be drained off to the sewer and cold water to replace it can be obtained from the pipe F, which is connected to the mains. The temperature of the water in the sump should be maintained constant by providing a steady flow at both E and F.

Centrifugal pumps usually operate at constant speed, but the head, the quantity of water delivered, the horsepower input and, therefore, the efficiency vary widely, although systematically. To clearly understand the interrelation of these variables, curves should be plotted. The data for each is taken simultaneously and at the same speed of the pump. One shows the relation between capacity and head, one between capacity and power input, and the third the relation between capacity and efficiency. In all of these the capacities are plotted along the abscissa.

Fig. 27 shows three such sets of curves from an 8″ single-stage pump. The " head " curve shows the variation of total head as the capacity is increased from zero up to the maximum quantity that can be forced through the pump at the given speed, with the discharge valve wide open. The " horsepower input " curve indicates the variation in the power required to keep the pump up to the required speed simultaneously with the changes in head and capacity. The efficiency curve follows from the other two.

From the " head " curve at any given speed can be obtained at once the actual head against which the pump can deliver a given quantity of water. But it is worth emphasizing that in order to give a certain quantity of water at a given speed the pump must be working against the head, as indicated by the " quantity-head " curve at that capacity. Suppose the pump is running at 1800 r.p.m. and it is desired to deliver 400 gallons per min. against 200 ft. head. From our curve to deliver 400 gal. per min. the pump must be working against 214 ft. head and not 200, for at 200 ft. head it would deliver 1375 gal. per min. To produce the 214 ft. head the excess 14 ft. must be produced by closing the throttle valve partly. The only other way in which we could have obtained the desired point of operation would have been to reduce the speed of the pump until the desired head and quantity would be obtained.

Conversely if we have such curves for any pump and operate it at the test speed we can, by observing the suction and discharge heads, determine very nearly what quantity of water is being delivered.

In general, "quantity-head" curves rise more or less from the shut-off point, as at O_0, for a part of the total range; and then after passing the maximum, fall with increasing capacity. If the curve can be continued far enough it will be found that the head finally comes down to zero along a line approaching the vertical. It is to be noted that the curves at various speeds are practically parallel or concentric, and if, for instance, we wanted to construct a "quantity-head" curve for a speed of, say, 2000 r.p.m. we could transfer any point on the 1800 r.p.m. to the new curve by remembering that the heads vary as the square of the speed, and the quantity delivered directly as the speed.

The " horsepower input" curves will be found below the " head " curve. At 1800 r.p.m. it will be found that 800 gal. per min. will be delivered against 212 ft. head. To find what horsepower is required follow the 800 gallon line until it intersects the 1800 r.p.m. " hp. input" curve. We find that 83 hp. are required. This would not, however, justify us in purchasing, say, an 85 hp. motor for the work. For if the discharge line should burst the head would gradually fall off along the "quantity-head" curve. When the head has dropped to, say, the point O_4, the horsepower to be developed by the motor is 119 hp., as indicated by the point P_4. A motor capable of giving that horsepower would have to be selected in our case. In general the " horsepower" curves rise to a maximum and then generally fall off abruptly to the same hp. input as is required at shut-off.

The efficiency curves lie, in this case, between the head and the power curves. They start from zero, at zero capacity or shut-off, at which point the pump does no useful work, although

it consumes power which is entirely wasted in friction. As the capacity increases the efficiency increases until it reaches a maximum, and then decreases to zero at the full capacity of the pump, where again no useful work is performed as the head against which the water is pumped is zero. In general, the curve is a semi-ellipse, with the capacity line as the minor axis. It is worth noting that up to a certain limit the maximum efficiencies increase with increasing speed, only to decrease again when that maximum has been passed. The point of maximum efficiency moves to the right or in the direction of increased capacity as the speed is increased.

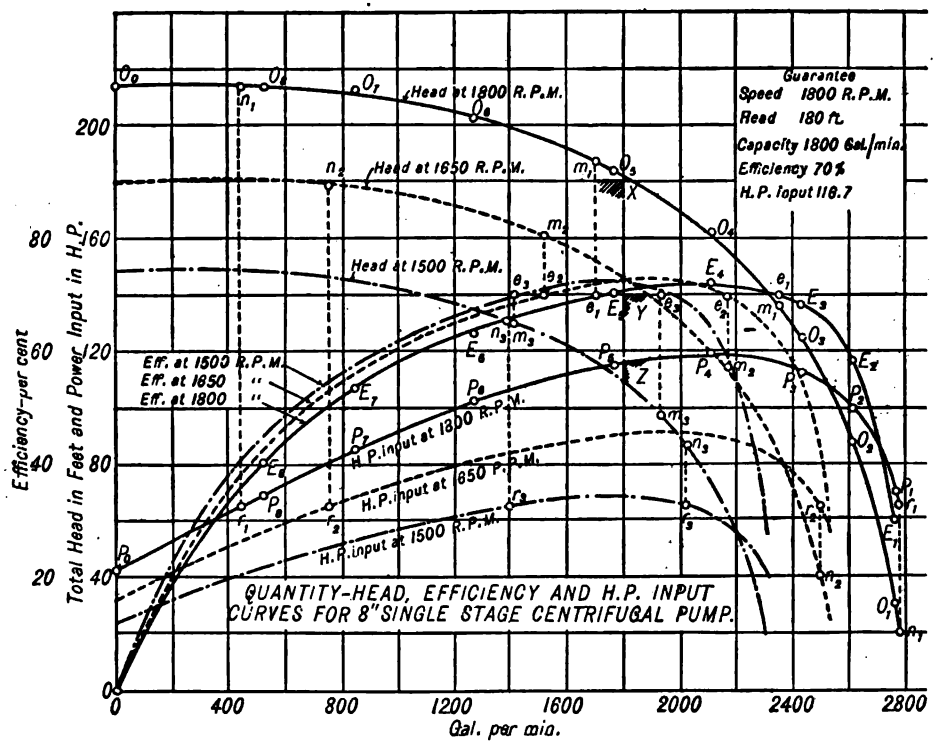

FIG. 27.

The data for a set of such curves are to be taken as follows: The pump is primed and brought up to the predetermined speed. As soon as there is a decided flow the throttle valve is closed. In this condition the total head is determined and also the hp. input. This locates the point O_o on the "quantity-head" curve and also the point P_o on the "power" curve. The efficiency is, of course, zero.

The throttle valve is now opened wide and the speed adjusted by regulating the motor. The total head on the pump will now consist of simply the suction head and the few feet of head necessary to discharge the water through the pump, the open valve and the discharge piping. Under these conditions the maximum possible quantity of water will be delivered. In this way the point O_1 on the "quantity-head" curve and the point P_1 on the "power" curve will be located. The point E_1 on the "efficiency" curve can be located by calculation.

We shall now have to explore the region between the points O_1 and O_o. A good way is to find the discharge gage reading at O_o and at O_1 and divide the range roughly into,

say, eight equal parts. Now gradually close the throttle valve until the discharge gage reads the first of the pressures decided upon. Regulate the speed and take the readings. Then proceed to the next point. It is essential that at least the "quantity-head" curve be plotted as the test proceeds, otherwise there may be gaps that will be hard to fill in when the curves are being drawn up in the computation room.

When the last of these points—for example O_3, and P_3 in Fig. 27—has been determined, change the speed of the pump to the second predetermined speed and proceed in the same way.

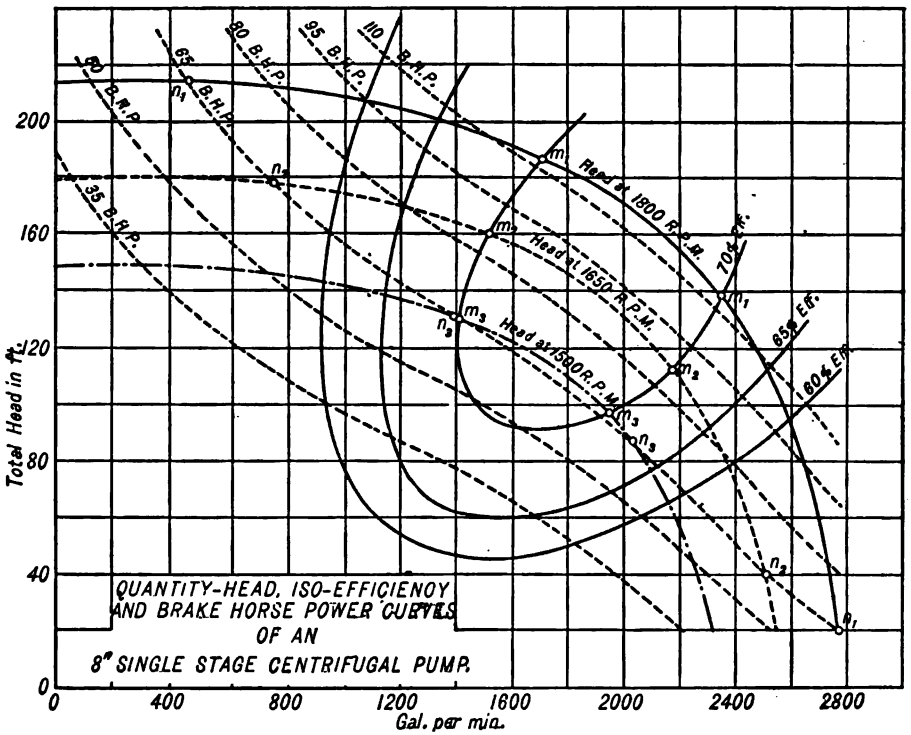

FIG. 28.

The result will be another series of similar curves, as shown in dotted lines. By running at still another speed, curves, shown in dot and dash lines, will be obtained.

When the above results have been plotted the so-called "oak tree" curves (Fig. 28) can be constructed from them.

In Fig. 27 the 70% efficiency line crosses the efficiency curve of the 1800 r.p.m. test in the points e_1e_1. From e_1e_1 draw verticals to the "quantity-head" curve. The intersections are m_1m_1. Now find where the 70% efficiency line intersects the two other curves. The points are e_2e_2 and e_3e_3. On the corresponding "quantity-head" curves the corresponding points are m_2m_2 and m_3m_3.

In Fig. 28 the "quantity-head" curves are reproduced and smooth curves are drawn through the points m_1m_1, m_2m_2, and m_3m_3. In an entirely similar manner curves are drawn for 65 and 60% efficiency.

In Fig. 27 the 65 horsepower line intersects the power curve of the first test at r_1r_1. Projecting to the corresponding "quantity-head" curve the points n_1n_1 are located and those in

turn are transferred to Fig. 28. On the second power curve the points r_2r_2 and on the third the points r_3r_3 were located. The corresponding points on the "quantity-head" curves are n_2n_2 and n_3n_3. Transferring the points n_1n_1, n_2n_2, and n_3n_3 to Fig. 28, and drawing a dotted line through them all we have located the locus of all points at which it requires 65 hp. to keep the pump up to the required speed. In a similar way the other horsepower curves are located.

Example. Curves like these for each type and size of pump are issued to the branch sales offices of the larger centrifugal pump concerns and are used as follows: Suppose a customer wants a pump to deliver 1800 gallons per minute against a head of 140 ft. The salesman sees at once that if the pump is driven at 1650 r.p.m. it will give the desired quantity quite readily. He knows, that he can guarantee 70 per cent efficiency and that about 83 d.hp. will be required at the given load. To find the size of motor required for the maximum possible load in case of accident to the pipe line he must consult Fig. 27. There he will find that the maximum load that can come on the motor will be 91 hp. Consequently he will probably choose a 90 or even a 100 hp. motor in order to be on the safe side.

Steam Consumption of Steam Turbine Driven Turbine Pumps. Table 14 contains the results of tests on the comparative steam consumption of turbine driven and reciprocating boiler feed pumps on three vessels of the U. S. Navy, where the best pumps of each type were in use.

TABLE 14

Scout Cruiser	Steam Press., Pounds	Back Press., Pounds	G.P.M.	Head in Feet	Water Rate per W. Hp.		Advantage in Favor of Turbines
					Recip. Pumps	Turbine Pumps	
Birmingham.....	183	6	329	488	83:0	61.8	25.5%
Salem.....	203	6	193	690	91.8	61.2	33.6
Chester.....	187	6.7	219	610	101.0	64.0	34.6
Average.....	...	...	...	...	91.9	62.4	31.2

NOTES ON THE INSTALLATION OF PUMPS

The following matter regarding the installation of pumps is an extract from a bulletin issued by the *Goulds Mfg. Co.*

Reciprocating Pumps. *Location.* The pump should be located as near the source of supply as possible. Never under any circumstances exceed the height and distance from the source of supply, given in Table 1. When *hot* and *thick* liquids are to be handled, they should always flow to the pump. It is always advisable to place the pump so that it can be readily reached from all sides.

Foundation. Power pumps are self-contained and are not dependent upon foundations to maintain correct alignment of the working parts, but a good foundation is essential to preserve the correct position of the pump in relation to its driving mechanism, and to avoid undue strain upon the pipe connections. The pump should, therefore, be placed upon a level and secure foundation. For many smaller pumps, a good plank floor, such as is found in any well-built mill or factory, is sufficient, but for the large, heavier pumps, a substantial concrete foundation with anchor bolts should be provided. Where such foundations are to be made, plans will be sent so that the foundation work can be completed before the arrival of the pump.

Piping in General. Run all piping in as direct a line as possible; avoid all unnecessary turns. See that all joints and connections are tight, and if the pipe lines are long, use larger size pipe than that listed for the pump, in order to reduce friction and to keep down the pressure on

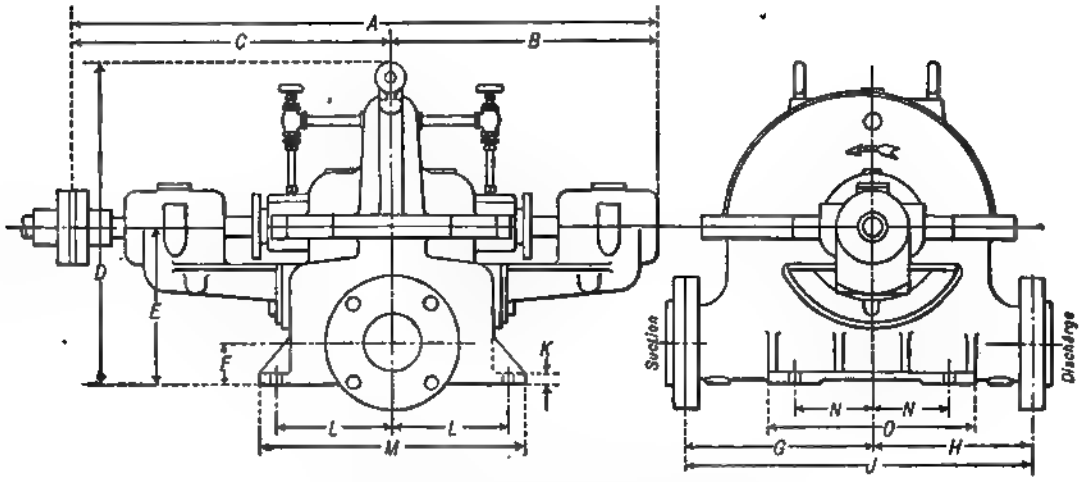

FIG. 29. SINGLE-STAGE DOUBLE-SUCTION GOULD PUMP.

TABLE 15

DIMENSIONS OF GOULD'S SINGLE-STAGE DOUBLE-SECTION PUMP.

the pump. This will prove economical in the long run. To illustrate: Suppose a pump is discharging 100 gallons per minute through a 3-inch pipe, 1000 feet in length. From the friction table for iron pipe, it will be seen that the loss of head for 100 feet of 3-inch pipe discharging 100 G. P. M. is 3.52 feet, which for 1000 feet of pipe means a loss of 35.2 feet. If in place of 3-inch pipe, 4-inch pipe were used, the corresponding loss would be 0.88 feet per 100 feet of length, or 8.8 feet for 1000 feet of pipe. The saving in pressure on the pump would, therefore, be 35.2 — 8.8 = 26.4 feet, which is equivalent to approximately 11.4 lb. pressure per sq. in.

Suction Pipe. The suction pipe should in no case be smaller than the size given in the pump table, and if very long, it should always be larger. In laying the suction pipe, a uniform grade should be maintained throughout to avoid air pockets, and if possible the lines should have a drop of not less than 6 inches in each 100 feet length toward the source of supply.

Vacuum Chamber. The addition of a vacuum chamber greatly aids and steadies the suction flow, and one should be used on high suction lifts. Where it is possible, the vacuum chamber should be mounted on the pump, on the side opposite the suction intake.

Foot Valve. When the total suction lift exceeds 15 feet, or the suction line is over 100 feet in length, it is advisable to place a foot valve on the end of the suction pipe. This keeps the pipe and pump chamber filled with water, thus avoiding the possible necessity of priming the pump each time it is started.

Strainer. If the source of supply is at a point where foreign substances may be drawn into the pump with consequent clogging of the valves, a strainer of good liberal area should be used on the suction pipe; preferably one that can be examined and cleaned occasionally.

TABLE 16

SPEED TABLE FOR GOULDS SINGLE-STAGE, DOUBLE-SUCTION CENTRIFUGAL PUMPS

Size	Speed Max. and Min.	R. P. M. for Total Heads from 10 to 150 Feet														
		10	20	30	40	50	60	70	80	90	100	110	120	130	140	150
2S...	Max.	1600	2260	2770	3200	3580	3930	4240	4530	4800	5060	5310	5550	5780	6000	6200
	Min.	800	1130	1385	1600	1790	1960	2120	2260	2400	2530	2660	2780	2890	3000	3100
2L...	Max.	800	1130	1385	1600	1790	1960	2120	2260	2400	2530	2660	2780	2890	3000	3100
	Min.	490	695	855	985	1100	1210	1300	1390	1480	1560	1635	1710	1775	1845	1910
3S...	Max.	1140	1610	1970	2280	2540	2800	3020	3220	3420	3600	3780	3950	4110	4260	4410
	Min.	710	1005	1230	1425	1590	1745	1880	2010	2140	2250	2360	2470	2570	2660	2760
3L...	Max.	710	1005	1230	1425	1590	1745	1880	2010	2140	2250	2360	2470	2570	2660	2760
	Min.	425	605	740	855	955	1045	1130	1210	1280	1350	1415	1480	1540	1600	1655
4S...	Max.	880	1250	1530	1770	1970	2170	2340	2500	2650	2790	2930	3060	3190	3300	3420
	Min.	610	860	1055	1220	1360	1495	1615	1725	1830	1930	2020	2110	2200	2280	2360
4L...	Max.	610	860	1055	1220	1360	1495	1615	1725	1830	1930	2020	2110	2200	2280	2360
	Min.	375	535	650	755	840	925	995	1065	1130	1190	1250	1305	1360	1410	1460
5S...	Max.	880	1250	1530	1770	1970	2170	2340	2500	2650	2790	2930	3060	3190	3300	3420
	Min.	535	755	925	1070	1190	1310	1410	1510	1600	1690	1770	1850	1925	2000	2070
5L...	Max.	535	755	925	1070	1190	1310	1410	1510	1600	1690	1770	1850	1925	2000	2070
	Min.	345	490	600	690	775	850	915	980	1040	1095	1150	1200	1250	1295	1340
6S...	Max.	775	1100	1345	1550	1730	1900	2060	2200	2330	2460	2570	2690	2800	2900	3010
	Min.	475	670	820	950	1060	1165	1255	1340	1420	1500	1575	1640	1710	1775	1840
6L...	Max.	475	670	820	950	1060	1165	1255	1340	1420	1500	1575	1640	1710	1775	1840
	Min.	310	435	535	615	690	755	815	870	925	975	1025	1070	1110	1155	1195
8S...	Max.	520	740	905	1045	1170	1280	1385	1480	1570	1650	1735	1810	1885	1955	2030
	Min.	355	505	615	710	795	875	940	1005	1065	1125	1180	1235	1285	1330	1380
8L...	Max.	355	505	615	710	795	875	940	1005	1065	1125	1180	1235	1285	1330	1380
	Min.	265	380	460	535	595	655	705	755	800	845	885	925	965	1000	1035
10S...	Max.	425	605	740	855	955	1045	1130	1210	1280	1350	1415	1480	1540	1600	1655
	Min.	320	455	555	640	715	785	850	905	960	1010	1060	1110	1155	1200	1240
10L...	Max.	320	455	555	640	715	785	850	905	960	1010	1060	1110	1155	1200	1240
	Min.	235	335	410	475	530	580	630	670	710	750	785	820	855	890	920
12S...	Max.	355	505	615	710	795	875	940	1005	1065	1125	1180	1235	1285	1330	1380
	Min.	265	380	460	535	595	655	705	755	800	845	885	925	965	1000	1035
12L...	Max.	265	380	460	535	595	655	705	755	800	845	885	925	965	1000	1035
	Min.	200	285	345	400	450	490	530	565	600	635	665	695	720	750	775
15S...	Max.	305	430	530	610	680	750	805	860	915	965	1010	1060	1100	1140	1180
	Min.	230	325	395	460	510	560	605	645	685	725	760	795	825	855	885
15L...	Max.	230	325	395	460	510	560	605	645	685	725	760	795	825	855	885
	Min.	170	240	290	340	380	415	445	475	505	535	560	585	610	630	650

NOTE.—Speeds given above are for maximum, normal, or any intermediate capacity. If the desired head is between two of the head values given in the speed table, use the speed limits for the lower head.

Explanation of Speed Table 16. The table shows the maximum and minimum speed of each size single-stage, double-suction centrifugal pump for heads from 10 to 150 feet. The speeds given are for maximum, normal or any intermediate capacity. It will be seen that for each pump there are two sizes available. One is the high-speed pattern designated by "*S*," and the other the low, designated by "*L*." In every case the pattern must be selected so that the speed of the pump is within the maximum and minimum limits. Where the speed at which the pump is to operate is not determined by the prime mover, we suggest that the high-speed pattern "*S* " be used. This is desirable because the higher speed of this pattern makes it possible to use a smaller diameter impeller for any head; the frictional losses are reduced and the highest efficiency is obtained.

Water Relief Valve. A water relief valve of ample size, set at a pressure slightly above that at which the pump is to operate, must be placed between the pump and any shut-off valve in the discharge pipe, in order to avoid damage in case the pump is started with the gate valve closed.

Gate Valve. Always use gate valves, not globe valves: globe valves increase the friction, while gate valves offer an unrestricted passage. It is advisable to place a gate valve at or near the pump in both suction and discharge pipes, so that the valve may be closed when it is found necessary to examine the pump.

TABLE 17

HORSEPOWER TABLE FOR GOULDS SINGLE-STAGE, DOUBLE-SUCTION CENTRIFUGAL PUMPS

NOTE.—For method to determine d.hp. required for intermediate capacities and heads, see below.

Explanation of Horsepower Table 17. This table shows the power required for each size single-stage, double-suction centrifugal pump at both the normal or maximum capacity against total heads from 10 to 150 feet. To determine the horsepower required for any intermediate capacity against any desired head, multiply the capacity desired in gallons per minute by the total head in feet, divide by the constant 4000 and then divide the result obtained by the efficiency of the pump. The rule just given may be expressed as follows:

$$\text{d.hp.} = \frac{Q \times H}{4000 \times E}$$

where d.hp. is the brake horsepower required, Q is the capacity desired in gallons per minute, H is the desired total head in feet, and E is the efficiency of the pump expressed as a decimal.

The following table of efficiencies is to be used for figuring the horsepower required by the single-stage, double-suction pumps.

To allow for ample power in the driving equipment, low efficiencies have been given purposely.

TABLE 18

Size	Efficiency	Size	Efficiency	Size	Efficiency	Size	Efficiency
2S	0.47	4L	0.57	8S	0.70	12S	0.72
2L	0.45	6S	0.66	8L	0.66	12L	0.70
3S	0.55	6L	0.60	10S	0.72	15S	0.72
3L	0.52	6S	0.68	10L	0.68	15L	0.70
4S	0.60	6L	0.62				

FIG. 30. TERRY TURBINE DRIVEN BOILER FEED PUMPS.

TABLE 19

APPROXIMATE OVER-ALL DIMENSIONS OF TERRY TURBINE DRIVEN BOILER FEED PUMPS

No.	Size	Stage	Capacity G. P. M. Min.	Capacity G. P. M. Max.	R. P. M. 150 lb. Dis. Pres.	R. P. M. 200 lb. Dis. Pres.	B.H.P. Required 150 lb Dis. Pres.	B.H.P. Required 200 lb Dis. Pres.	Over-all Dimensions A	B	H	D	E	F	Openings Suc.	Openings Dis.
1	3"		175	300	2,500	2,700	50	67	5'-9 1/2"	4'-9"	4'-0 1/2"	3'-0 1/2"	3'-4 1/2"	3'-4 1/2"	4"	3"
2	4		300	500	2,300	2,450	76	102	9'-6 1/2	5'-6	4'-0 1/2	3'-5 1/2	3'-5	3'-4 1/2	5	4
3	5		500	750	2,000	2,200	105	140	10'-6 1/2	6'-6 1/2	4'-0 1/2	3'-10 1/2	3'-6 1/2	3'-4 1/2	6	5
4	3		160	250	2,500	2,750	45	60	8'-4 1/2	4'-4	4'-0 1/2	3'-3 1/2	3'-3	3'-4 1/2	4	3
5	4		250	400	2,550	2,850	66	88	8'-4 1/2	4'-4	4'-0 1/2	3'-3 1/2	3'-3	3'-4 1/2	4	4
6	5		400	700	2,150	2,450	105	140	9'-5 1/2	5'-5	4'-0 1/2	3'-6 1/2	3'-3	3'-4 1/2	6	5

Nos. 1, 2 and 3 are for Worthington pumps. Nos. 4, 5 and 6 are for Jeanesville pumps.

Drain Pipe. Each cylinder is provided with suitable openings at the top to which small drain pipes may be connected for carrying off any water that may accumulate around the stuffing-box glands.

Centrifugal Pumps.* *Location.* Place the pump as near the source of supply as possible and so that there will be the fewest possible number of bends or elbows in the suction pipe. If possible the pump should be within 15 feet or less of the water level; and the suction lift should never be more than 20 feet, including the pipe friction head when handling cold water.

Foundation. Prepare a concrete foundation with the surface ½ inch lower than the level at which the pump is to be installed, to allow for the final leveling and grouting. Have the

* When turbine pumps are employed for boiler feeding and handling hot water from heaters, the water should be delivered to the pump under a head of about 7 feet.

FIG. 31. GOULDS SINGLE-ACTING TRIPLEX PLUNGER PUMP.

TABLE 20

Gallons Disp. per Minute	For Work'g Pressure Lb.	Pattern	Size Pump		Gals. Disp. 1 Rev. of Crank Shaft	Usual Speed of Crank Shaft	Horse-power per 100-Lb. Pressure	Sizes of Pipe		Geared	Single Pulley for Double Belt
			Diam. Plunger in In.	Stroke in In.				Suc. in In.	Dis-ch'ge In.		
240	220	A	7	12	6.00	40 r.p.m.	16.3	6	5	5 6 to 1	Special in each case to suit size and speed of driver.
318	170	A	8	12	7.83	40 "	21.25	7	6	5.6 to 1	
352	150	A	8¼	12	8.82	40 "	23.9	7	6	5.6 to 1	
396	130	A	9	12	9.92	40 "	26.9	7	6	5.6 to 1	
488	100	A	10	12	12 24	40 "	33.2	8	7	5.6 to 1	
488	150	B	10	12	12.24	40 "	33.2	8	7	5 6 to 1	
598	130	B	11	12	14.81	40 "	40.2	10	8	5.6 to 1	
706	110	B	12	12	17.62	40 "	47.9	10	8	5.6 to 1	

To determine horsepower for increase or decrease in pressure, multiply hp. in table by operating pressure divided by 100.

foundation bolts extend above the concrete, according to the dimension sheets of the pump. The bolts should be threaded at least 6 inches and should be set in the concrete within gas-pipe thimbles of such size as to allow a clearance of ½ inch between the bolts and their thimbles.

Piping in General. In selecting the piping, do not overlook pipe friction, especially if the pipe lines are long. All pipe friction means extra power to drive the pump, and where this friction would be a considerable item it is usually advisable to reduce it by selecting a larger size pipe, as the extra first cost of the larger diameter pipe will soon be returned by the saving in power. All unnecessary bends and elbows should also be avoided as they increase the pipe friction.

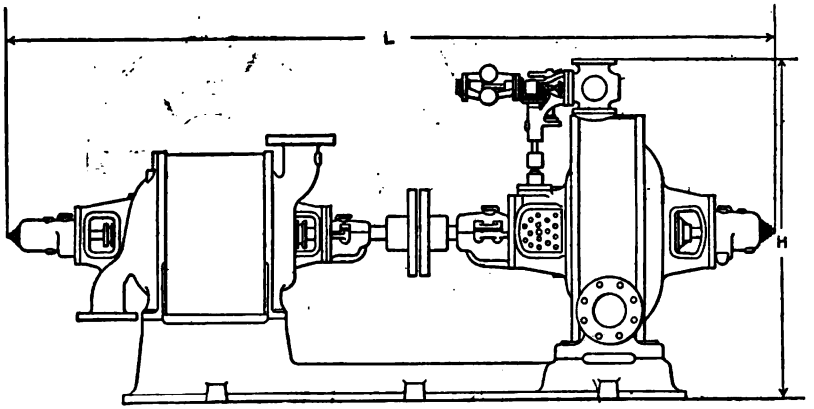

OUTLINE ELEVATION

FIG. 32. ALBERGER BOILER FEED PUMPS.

TABLE 21

Capacity Boiler H. P.	Pumps Nos.	Size of Discharge and Suction	Width	Height H	Length (L) for Maximum Water Pressure		
					130 Lb.	185 Lb.	240 Lb.
		In.	Ft. In.	Ft. In.	Ft. In.	Ft. In.	Ft. In.
1,000	13–14–15	2	30	3 1	6 0	6 3	6 6
2,000	22–23–24	2½	30	3 1	6 1	6 7	7 0
3,000	32–33–34	3	3 3	3 10	6 11	7 5	7 9
4,000	42–43–44	4	3 7	4 3	8 6	9 2	9 7
5,000	52–53–54	4	3 7	4 3	8 6	9 2	9 7
7,000	72–73–74	5	4 3	5 0	9 3	10 0	10 7
9,000	92–93–94	6	4 3	5 0	9 6	10 0	10 11
12,000	122–123–124	8	4 8	5 10	10 10	11 9	12 6
15,000	152–153–154	8	4 8	5 10	10 10	11 9	12 6

NOTE.—100 boiler hp. = 7.5 g.p.m. or 15% in excess of average requirements. Steam pressure must not be less than 85% of water pressure for full capacity.
NOTE.—All dimensions are approximate.

Suction Pipe. Never use smaller piping than the size of the pump suction opening, and if the suction lift exceeds 15 feet, use a larger size pipe than the size of the pump suction. If the length of the suction pipe is excessive, use suction piping at least two sizes larger than the suction opening of the pump, and if this is done it is advisable to use a fairly long conical reducer at the pump. Never attempt a suction lift of more than 20 feet under any circumstances.

Always place the end of the suction pipe at least three feet below the surface of the water to prevent air being drawn into the pump. Avoid air pockets in the suction piping. If the

suction pipe is not in a vertical position, it should slope downward and never upward toward the water, if there is any suction lift.

It is desirable, especially when there is pressure on the suction side of the pump, to place a gate valve in the suction pipe near the pump so the capacity of the pump can be controlled to some extent on the suction side. It is also advisable to place a strainer on the end of the suction pipe to prevent large pieces of debris entering the pump.

Gate and Check Valve. Place a gate valve and check valve in the discharge pipe as close as possible to the pump. The gate valve must be placed between the check valve and the pump.

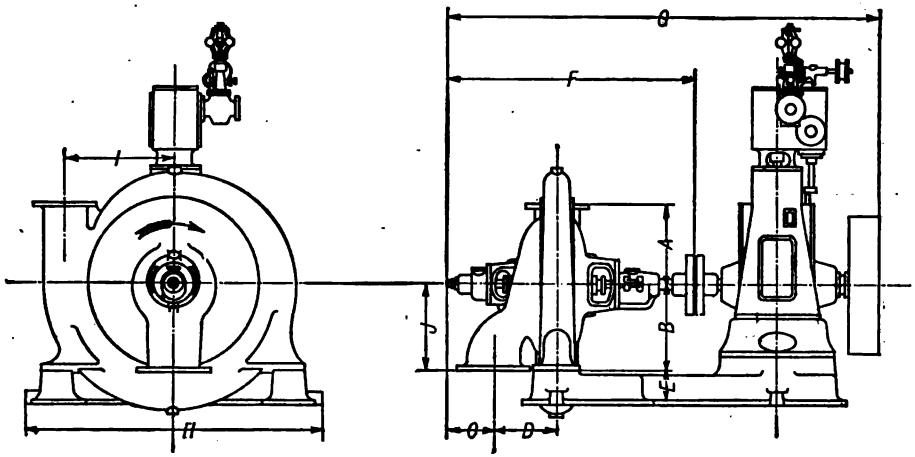

FIG. 33. ALBERGER REGULAR VOLUTE PUMPS.

TABLE 22

SIZE		Max. Cap'ty G. P. M.	DIMENSIONS IN INCHES									
Suc.	Dis.		A	B	C	D	E	F	G	H	I	J
6	5	700	15	16½	9¼	9¼	6½	43	78	46	19¾	16½
8	6	1,000	16	18	9½	11	8	48	85 7/8	52½	22	18¼
10	8	1,800	18	20	9½	14¾	11	52¾	98	63	25¾	20½
12	10	2,800	21	22	11½	16½	9	63½	111½	73½	28⅞	22½
14	12	4,000	24	24	12⅝	18½	9½	70 9/16	124⅝	79	31	24
16	14	5,500	26	26	15	20½	10½	78½	138	86¾	33⅝	25½
18	16	7,500	28	28	15	22¼	11	81⅝	141⅛	95½	36¼	26½
22	20	12,000	31½	32	18¾	27	12	96¾	170	112½	41½	31½
26	24	18,000	36	34	21⅛	31¼	12	110	190	128½	46½	36

NOTE.—Dimensions E and G are approximate and will vary with size of engine.

The gate valve is used to control the capacity and the check valve to prevent breakage of the pump casing from water hammer. This is important and necessary.

Electric Drive. Do not attempt to operate a motor-driven centrifugal pump from a trolley circuit as the line voltage of such circuits is exceedingly variable. The speed of a direct-current motor varies almost directly with the voltage, and the capacity of a centrifugal pump varies greatly with changes in the pump speed. If the pump is designed to run at the speed corresponding to the motor speed at maximum voltage, it will deliver little or no power when the voltage is low. If designed to give the desired capacity at the motor speed at minimum voltage, the motor will be seriously overloaded when the voltage rises to its highest point.

Priming. Centrifugal pumps must be filled with water and the air removed from the casing (primed) before starting. Any of the following methods of priming may be used:

1. The pump may be set below the water level, in which case the water will flow through

the suction pipe into the pump by gravity, thus filling the casing and forcing out the air through the cocks provided.

2. A small by-pass pipe around the check valve in the discharge pipe may be used to fill the pump with water from the discharge pipe in situations where the discharge pipe is kept full of wter.

3. The pump may be filled from an independent source of supply such as a tank placed above the pump or from a supply pipe.

4. An air or steam ejector may be used to draw water up the suction main, the discharge line being closed.

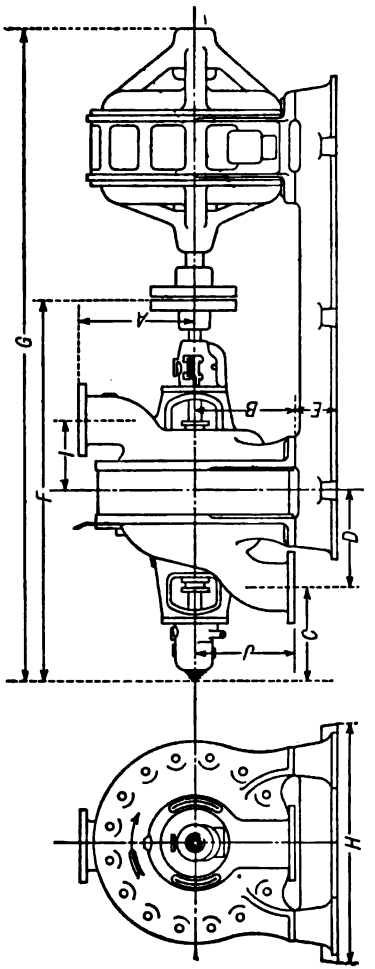

FIG. 34. ALBERGER TURBINE PUMPS.

TABLE 23 (See Fig. 34)

DIMENSIONS IN INCHES FROM ONE TO FOUR STAGES

Size	Maximum Capacity G.P.M.	A	B	C	D				E				F				G				H	I				J
		1–4	1–4	1–2	1	2	3	4	1	2	3	4	1	2	3	4	1	2	3	4	1–4	1	2	3	4	1–4
2	100	9	7 1/2	8	5 1/2	7 7/16	8 9/16	10 9/16	4 3/16	5	5 1/2	6	28 5/8	32	35 1/4	38 3/4	48 3/4	54 1/2	63 3/4	62 1/2	17	3 1/2	5 9/16	6 23/32	8 9/16	7 1/2
2 1/2	150	10 1/2	8 1/2	8	6 9/16	8 1/4	10 1/4	12 5/16	4 1/2	4 1/2	5 1/2	6 1/4	29 1/2	33 7/16	40 9/16	44 3/4	54 5/8	60 3/4	67 1/2	79 1/2	18	4	5 5/8	7 13/16	9 1/4	8 1/2
3	250	12	10 1/2	9 7/16	7 1/4	9	11 1/16	13 1/16	4 1/2	4 3/4	5 1/2	7	31 1/16	35 1/16	41 7/8	45 7/8	56	71	76	88 5/8	22 1/2	4 1/2	6 1/2	8 9/16	10	10 1/2
4	450	14 1/2	12 1/2	12 3/4	7 1/4	10 1/4	12 11/16	15 1/16	5 1/2	6	7 1/2	8	42 1/2	47 1/16	55 1/4	66 3/4	70 1/2	80	90 1/2	99	28	5 1/4	8 1/2	10 11/16	13	12 1/2
5	700	16	14	16 3/4	8 1/2	11 3/4	14 1/2	17	6	6 1/2	7 1/2	8	46 1/2	58	61 3/8	73 1/2	81	91	101	108	31	7	9 3/4	12 1/2	15 3/4	14
6	900	17	15	13 3/4	10 1/2	13 11/16	16 1/2	20 9/16	6	6 1/2	7 1/2	8	49 1/2	66	63 5/8	75 3/4	85	98	110	120	36	7 1/2	10 9/16	13 3/4	17 11/16	15
8	1,200	19	17	14 1/2	11 1/4	15 3/4	19 11/16	24 1/2	6 1/2	7	7 1/2	8	55 1/4	68	73 3/4	82 5/8	92	108	120	132	40	8 1/2	12 1/2	16 7/16	20 1/4	17
10	1,800	22	20	14 1/2	15 1/16	20	24 1/2	29	7	7 1/2	8	8 1/4	62 1/4	71 3/4	85 5/8	94	96	122	142	155	42 1/4	10 1/8	15 1/2	19 1/2	24 1/4	20
12	2,800	27	23 1/2	20 1/2	17 1/2	22 3/4	28 1/2	34 1/2	7 1/2	8 1/2	9 1/2	10	78	89 1/2	101	118	112	143 3/4	162 1/2	188	54 1/2	12	17 1/2	22 3/4	28 1/4	23 1/2
14	4,000	30	26 1/2	23 1/2	20 1/2	26 1/2	33 1/2	39 1/2	8 1/2	9	9 1/2	11	85 1/4	98	113	128	142 1/2	156	169	210	61	13 1/4	19 1/2	26	32 1/2	26 1/2
16	5,500	36	32	27	23 1/16	30 1/2	38 1/2	45 1/2	11	11	12	11	91 1/4	106 1/4	129	144	175 1/2	197	218	235	70	16	23 1/2	31	38 1/4	32

NOTE.—Dimensions E and G are approximate, and will vary with size and make of motor. These pumps can be arranged for steam turbine or belt drive.

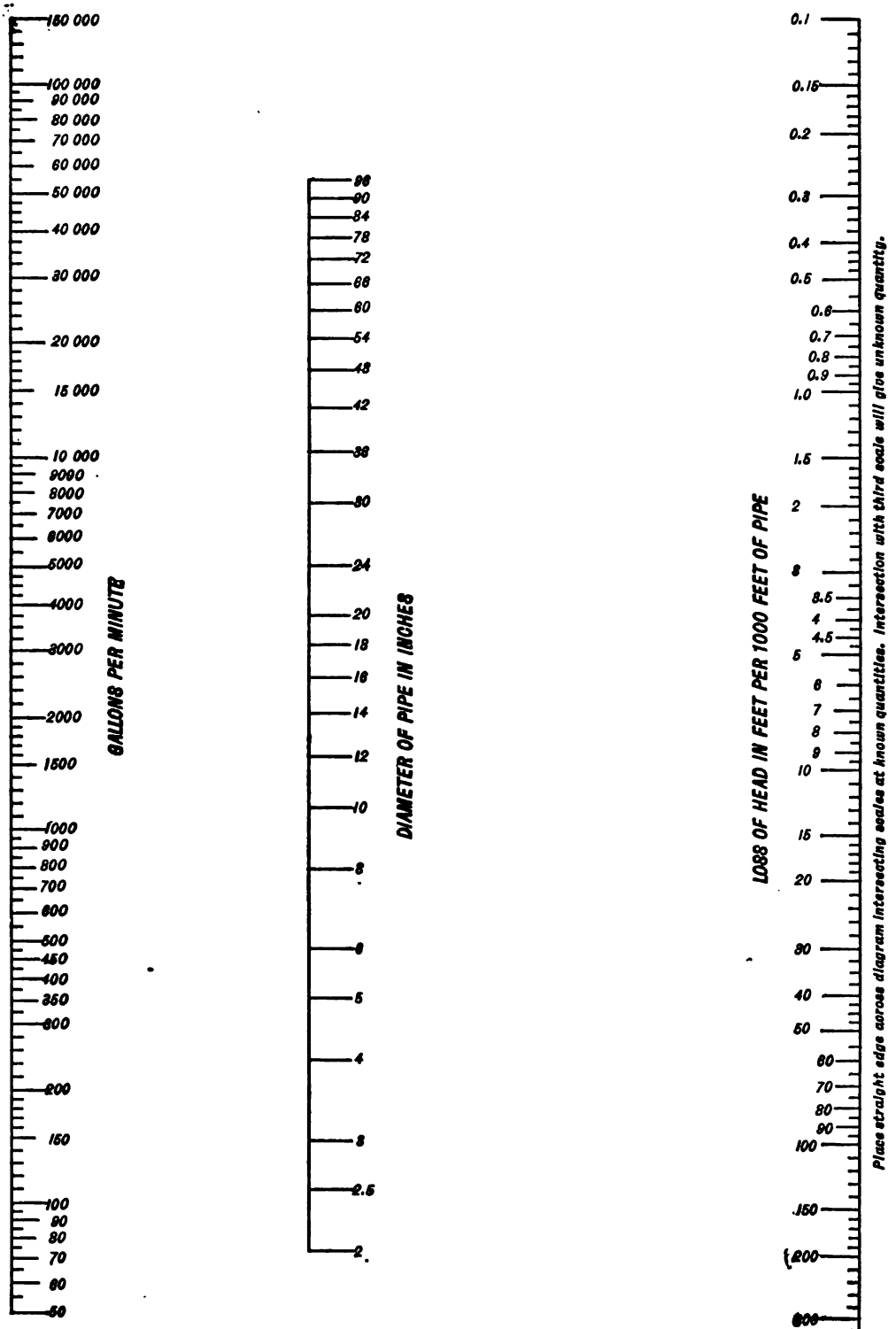

FIG. 35. CHART FOR DETERMINING RESISTANCE OF PIPES TO FLOW OF WATER.
(See *Hazen-Williams* Formula, $c = 100$.)

Approximate Cost of Pumping Water.

Triplex power pump and steam engine, 1½ to 5 lb. of coal per horsepower-hour.

Triplex power pump and gasoline engine, 1 pint of gasoline per horsepower-hour.

Triplex power pump and oil engine, 1 pint of oil per horsepower-hour.

Triplex power pump and gas engine, 10 to 20 cubic feet of gas per horsepower-hour.

Triplex power pump and electric motor, 1½ to 4c per 1,000 watt-hours or 1c to 3c per horsepower-hour.

Small steam pumps, about 25 lb. of coal per horsepower-hour.

Large steam pumps, compounded, about 13 lb. of coal per horsepower-hour.

Pulsometers, about 67 lb. of coal per horsepower-hour.

Injectors and inspirators, about 100 lb. of coal per horsepower-hour.

Note: The motor figures cover total power cost. The others cover fuel consumption only.

Chart for Flow of Water in Pipes. The values obtained from this chart (Fig. 35) are based upon the *Hazen-Williams* formula—

$$v = c\,r^{0.63}\left(\frac{h}{l}\right)^{0.54} \times 10^{0.12}$$

where v is the velocity in feet per second, r is the hydraulic radius $= \frac{\text{diameter}}{4}$ in feet, h the friction head, and l the length of piping; c is a constant depending upon the roughness of the pipe and upon the hydraulic radius.

The formula can also be written

$$h = \left(\frac{147.85}{c} \times \frac{Q}{d^{2.63}}\right)^{1.852}$$

where h is, as before, the friction head in feet for $l = 1000$ ft., Q is the water quantity in gallons per minute, and d is the diameter of pipe in inches.

The chart is based upon a value of $c = 100$, which is mostly used and considered safe for ordinary conditions.

For other value of c the figure obtained from the chart should be multiplied by $K = \left(\frac{100}{c}\right)^{1.852}$

For information regarding coefficient c for different kinds and size of pipes, and also value of K for different values of c, see table below:

Size of Pipe, In.		2 to 3	4	5	6	8	10	12	16	20	24	30	36	42	48	54	60
c	K	Condition of Pipe	Year of Service for Cast-Iron Pipe														
140	0.54	Very smooth and straight, brass, tin, etc.....	00	00	00	00	00	00	00	00	00	00	00	00	00	00	00
130	0.615	Ordinary straight, brass or tin.....	0	0	0	0	0	0	0	0	0	0	0	0	0	0	0
120	0.715	Smooth, new iron.....	4	4	4	5	5	5	5	5	5	6	6	6	6	6	6
110	0.84	.....	..	..	..	10	10	10	11	11	11	12	12	12	12	12	12
100	1.0	Ordinary iron.....	13	14	15	16	17	17	18	19	19	19	20	20	20	20	20
90	1.21	.....	..	..	..	..	..	26	27	28	29	30	30	30	30	31	31
80	1.51	Old iron.....	26	28	30	33	35	37	39	41	42	43	44	45	45	46	47
60	2.58	Very rough.....	45	50	55	62	68	..	..	..	..	..	..	..	..	..	..
40	5.45	Badly tuberculated....	75	87	95	..	..	..	..	..	..	..	..	..	..	..	..

00 Indicates the very best cast-iron pipe laid perfectly straight, and when new.

0 Indicates good new cast-iron pipe.

CHAPTER XIII

STEAM CONDENSERS

The primary object in operating engines or turbines condensing is for the purpose of obtaining a greater amount of useful work from a given weight of steam supplied than otherwise results when the machine is operated with atmospheric exhaust. The obvious result, when a condenser is added, is a saving in fuel.

Referring to Fig. 1 and assuming that the expansion of the steam in the engine or turbine is adiabatic and is carried down to the back or exhaust pressure, the energy converted into work is the difference between the heat content at the beginning and end of expansion. (*Rankine*

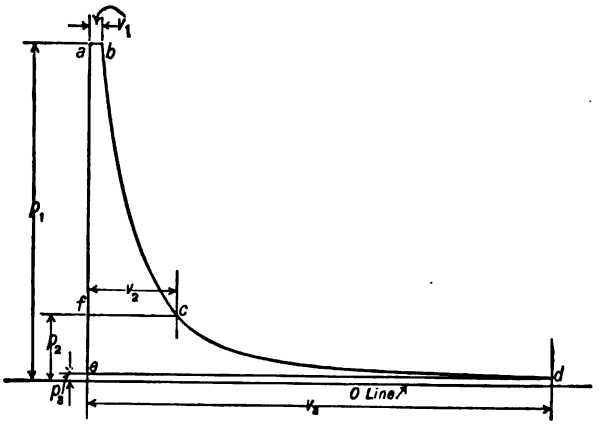

FIG. 1.

cycle.) For an initial absolute pressure $p_1 = 160$ lb. per sq. in. and terminal pressure (atmospheric) $p_2 = 14.7$ lb. per sq. in., which is also assumed as the back pressure, the heat equivalent of the work obtained from one pound of steam is $i_1 - i_2 = 1196 - 1022 = 174$ B.t.u. (*Mollier* diagram) represented by the area *abcf*. Now assume that by the addition of condensing apparatus the back pressure is reduced to $p_3 = 2$ lb. absolute (corresponding to a 26″ vacuum). The heat equivalent of the work obtained from one pound of steam for the same initial pressure is $i_1 - i_3 = 1196 - 907 = 289$ B.t.u. as represented by the area *abcde*. This represents a gain of $289 - 174 = 115$ B.t.u. for each lb. of steam supplied or $\left(\frac{289}{174} - 1.\right) = 0.66$ or 66% represented by the area *fcde*.

The theoretical steam consumption for the two conditions is:

$\frac{2546}{174} = 14.63$ lb. per i.hp.-hr. non-condensing, atmospheric exhaust.

$\frac{2546}{289} = 8.81$ lb per i.hp.-hr. condensing, 26″ vacuum.

The theoretical gain in economy or reduction in the steam consumption or water rate, for the stated conditions, by operating condensing is:

$$\left(1.-\frac{8.81}{14.63}\right) = 0.398 \text{ or } 39.8\%$$

The per cent reduction in the steam consumption of an actual turbine is about the same, as the water rate of the actual turbine varies in approximately the same ratio as that of the ideal *Rankine* engine.

Example. The steam consumption of a certain 300 kw. turbine operating non-condensing on dry saturated steam with an initial pressure of 165 lb. absolute is 38 lb. per kw.-hour, with atmospheric exhaust. Based on the above statement the steam consumption, when operating condensing with a 26″ vacuum, should be about $38 - (0.398 \times 38) = 24.1$ lb. per kw.-hour, which is approximately the result obtained in practice.

The above gain in economy is, however, not a net gain in the fuel consumption of the plant, as approximately 3 to 10 per cent of the steam used by the main units must be allowed for operating the condenser pumps, which reduces the apparent gain to an actual gain of approximately 30 per cent for the conditions of operation stated. Against this apparent gain must be charged the fixed charges of the condensing equipment, cost of pumping the water required, etc.

In order to obtain a correct comparison between engines and turbines operating with and without condensers, the economy curves for the size of units being considered should be consulted. It is found in practice, on account of the excessive size of low-pressure cylinder required to accommodate the large volume of steam at very low pressures, that a 24 to 26″ vacuum is a practical limit for reciprocating engines.

"The high cost, internal friction and condensation losses involved with the utilization of the last few inches of vacuum more than offset the amount of energy which might otherwise be gained." The steam turbine, on the other hand, is not limited by any such considerations and therein lies its greater superiority as the maximum degree of vacuum commercially possible may be utilized, with its accompanying economy. The decrease in the water rate of turbines due to an increase in vacuum is given in the Chapter on "Steam Turbines."

The curve, Fig. 2, shows graphically the per cent increase in efficiency of the theoretical *Rankine* engine when operating with various degrees of vacuum over that of non-condensing operation with atmospheric exhaust. Figs. 3 and 4 show the effect of condensing operation on steam turbines of 300 kw. rated capacity from actual tests.

Measurement and Degree of Vacuum. Pressures below atmosphere, in steam engineering practice, are ordinarily measured and stated in inches of mercury. This is the height of a column of mercury supported by the difference in pressure between the barometric pressure and the absolute pressure existing within the exhaust pipe or the condenser.

The actual absolute pressure h_a, measured in inches of mercury, is then the difference between the barometer reading h_b and the manometer or vacuum gage reading h_g or $h_a = h_b - h_g$.

The actual absolute pressure p_a measured in lb. per sq. in. is:

$$p_a = 0.491\, h_a = 0.491\, (h_b - h_g)$$

(1 inch mercury = 0.491 lb. per sq. in. temperature of mercury 32° F.).

Thus if the barometer reading is 29.8″ and the vacuum gage reads 26″ the actual absolute pressure is 29.8 − 26 or 3.8″ or $p_a = 0.491 \times 3.8 = 1.866$ lb. per sq. in.

It is customary to refer all vacuum readings to a 30″ barometer and in condenser calculations a 30″ barometer is assumed, although in practice the actual reading in any place fluctuates considerably, due to the changes in atmospheric conditions.

Free air is never absolutely free from the presence of water vapor, and as previously explained in the Chapter on "Air Conditioning, etc." in Volume I, the barometer pressure is the sum of

the partial vapor pressure and the air pressure corresponding to the temperature. As water vapor is less dense than air the more vapor present in the mixture the less will be the barometric pressure.

Let h_g = reading of vacuum gage, in. of mercury, temperature of mercury, 58.4° F.

h_b = reading of barometer, in. of mercury, temperature of mercury, 58.4° F.

$h_b - h_g$ = absolute pressure of the mixture of air and vapor, in. of mercury.

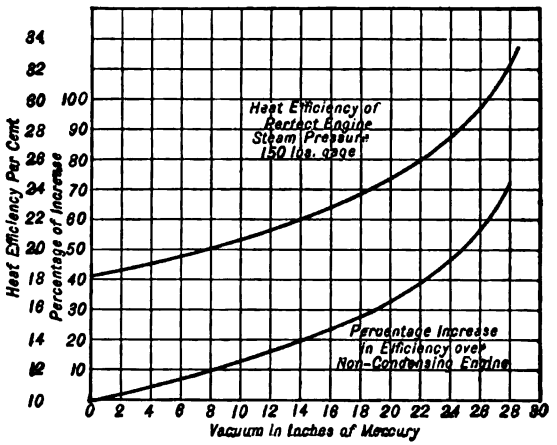

FIG .2. EFFICIENCY CURVE OF THE PERFECT ENGINE.

Then $30 - (h_b - h_g)$ = the vacuum in inches of mercury referred to a 30″ barometer.

The mercury column correction for any change in temperature may be approximated by the following equation for both the barometer and gage:

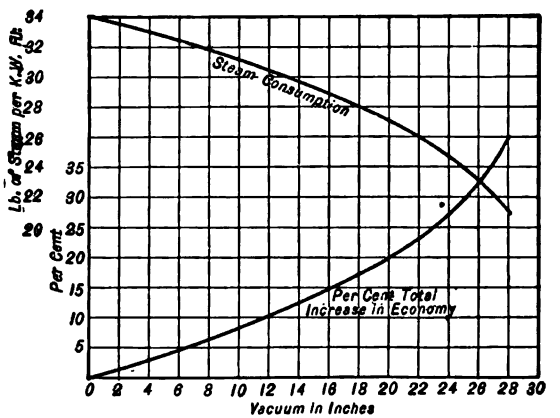

FIG. 3. EFFECT OF VACUUM ON THE STEAM CONSUMPTION OF A 300 KW. PARSONS TURBINE.

h = observed height of the mercury column at temperature t.

h_g = height corrected to temperature t'.

$h_g = h\,[1 - 0.000101\,(t - t')]$.

The following degrees of vacuum referred to a 30″ barometer are ordinarily used in condenser calculations and in practice:

TABLE 1

	Vacuum
Simple reciprocating engines	24″ to 25″
Compound reciprocating engines	26″
High pressure steam turbines	28″
Low-pressure steam turbines	28.5″

It is customary practice to base condenser calculations on the estimated weight of steam used by the engine or turbine at normal load.

Maximum Degree of Vacuum Obtainable. If we assume that dry saturated steam at temp. t_s and pressure p_s is flowing into a condenser which is being supplied with water, at a lower tem-

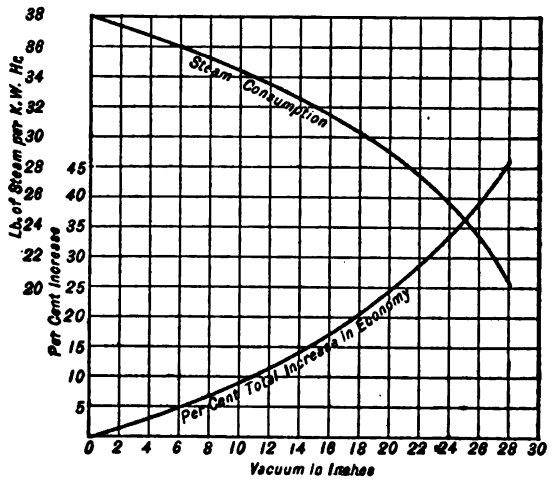

FIG. 4. EFFECT OF VACUUM ON THE STEAM CONSUMPTION OF A 300 KW. DE LAVAL TURBINE. Initial Pressure, 150 Lb. Gage Dry Saturated Steam.

perature t_1, in sufficient quantity to condense the steam, *theoretically* the final temperature of the cooling water t_2 may be equal to t_s, or, in other words, the temperature t_s and consequently the pressure p_s or vacuum maintained will depend entirely upon the final temperature of the condensing water. If, for example, the final temperature of the condensing water t_2 is 95° F., in the theoretically perfect condenser the steam temperature t_s will be equal to 95° and the condenser pressure p_s = 0.815 lb. per sq. in. absolute corresponding to 30 − 1.659 or 28.34 inch vacuum.

Practically, the above condition is not fulfilled in a condenser.

The observed absolute pressure p_c in a condenser, due to the presence of air mixed with the vapor, is the sum of the partial vapor pressure p_s and the air pressure p_a. That is, $p_c = p_s + p_a$ according to *Dalton's* law, Chapter on "Cooling Ponds and Towers."

The actual temperature of the steam t_s (the observed temperature of the mixture) is always lower than the temperature t_c corresponding to p_c or vacuum maintained, the actual variation depending upon the amount of air present in the mixture.

The ratio of $\frac{p_s}{p_c}$ may be assumed at approximately 0.90. Assuming that a 28″ vacuum

(referred to a 30" barometer) corresponding to 2" pressure or $p_c = 0.982$ lb. absolute pressure is to be maintained in the condenser $p_s = 0.90\ p_c = 0.8838$ lb. absolute.

The temperature corresponding to the vacuum is 101.17°; the temperature corresponding to p_s is 97.67°, making a difference of 3.5°.

Types of Condensers. There are two general classes of condensers, namely: (*a*) jet condensers, and (*b*) surface condensers.

In all types of jet condensers the steam and cooling water mingle and the steam is condensed by direct contact with the condensing water.

In surface condensers the condensing water is ordinarily passed through tubes around which the exhaust steam is directed, the transfer of heat from the steam to the water being made through the metal shell of the tubes.

The surface condenser is particularly adapted for installations in which it is desirable to return the condensate direct to the boilers when the quality of the water supply is such as to require special treatment before its introduction into the boilers.

JET CONDENSERS

A classification of jet condensers includes the following types:

Standard Type. In this type the cooling water is generally admitted at the top of a pear-shaped vessel, the exhaust steam also entering at the top of the chamber through an ell connection, and flowing in the same direction (parallel flow) with the condensing water.

The condensate, condensing water and non-condensable gases are removed from the base of the condensing chamber by means of a vacuum or wet-air pump and delivered to the hot well. Fig. 5 shows a section through this type of condenser.

If the suction lift for the injection water does not exceed 20 feet no circulating pump for the condenser is required. The water is raised by the vacuum maintained, this being the usual method of supplying the injection water for jet condensers.

The condensing chamber is ordinarily equipped with a vacuum-breaker, the office of which is to prevent water backing up into the exhaust pipe to the engine in case the vacuum pump fails to remove the water as fast as it accumulates. The device consists of a float, located in a chamber attached to the condenser near the top but below the exhaust pipe connection, and operates a valve communicating with the atmosphere.

When the water has risen to a sufficient height in the condenser the valve is automatically opened and the vacuum broken and the exhaust steam escapes through the injection pipe and the pump to the hot well.

This type of jet condenser is principally used in connection with reciprocating engines where the vacuum carried rarely exceeds 24" to 26" of mercury referred to a 30" barometer. The main advantage of this type of condenser is its relative low first cost. It is not suitable for steam turbine installations where a comparatively high vacuum is essential.

The top of the condenser must not be more than 20 feet above the level of the supply of injection water for condenser.

The injection pipe should be full size of injection opening at top of condenser. If this pipe is over 50 feet long, use a larger pipe, and for long distances the pipe should be still further increased in diameter. Place a strainer on the end of injection pipe. The injection water should never be supplied to condenser under pressure.

The cylinder drains of main engine should connect into the exhaust pipe; the cocks should be carefully ground to insure tightness.

Rectangular Rain Type. In this type (Fig. 7) the injection water is introduced at the top near one end, into an extended trough or pan, from which it overflows through numerous short tubes, falling into a second pan provided with similar overflow pipes and finally into the lower part of the shell and thence to the vacuum pump.

The steam enters through the opening in the left, passes horizontally to the right through

FIG. 5. STANDARD TYPE JET CONDENSER.

FIG. 6. INSTALLATION OF JET CONDENSER IN CONJUNCTION WITH CROSS COMPOUND ENGINE.

the shower of water, ascends to the second level, passes to the left through the upper shower, and finally all that is left of the non-condensable gases (air) and contained vapor passes horizontally to the right, and over the entering cold water, at the top to the dry vacuum pump suction connection.

TABLE 2

STANDARD JET CONDENSERS

Combined jet condenser and wet vacuum pump. Type of pump—double acting simplex. Vacuum—26" mercury (referred to 30" barometer). Steam pressure at pump—100 lb. gage.

Capacity, Steam Condensed per Hour with Cooling Water at		Diam. Steam Cyl. In.	Diam. Water Cyl. In.	Stroke In.	Total Weight, Pounds	Net Price at Factory	
70°	80°					Plain	Brass Fitted
400	325	4	6	5	450	$136	$148
1,000	800	4	8	7	750	164	180
1,600	1,360	5½	9	10	1,500	260	282
2,000	1,680	5½	10	10	1,800	315	342
3,300	2,700	7	12	12	2,050	315	348
3,400	2,800	7	12	15	2,400	333	368
4,000	3,350	7	12	18	2,750	350	393
4,400	3,650	7	14	12	3,000	350	393
5,500	4,550	8	14	18	3,550	426	476
7,200	6,000	8	16	18	4,100	560	620
9,100	7,500	10	18	18	5,300	605	675
12,000	9,900	10	20	24	8,000	750	837
14,500	12,000	12	22	24	8,200	850	950
17,200	14,250	12	24	24	8,400	940	1,050
20,200	16,750	12	26	24	9,000	1,000	1,125
26,900	22,260	16	30	24	12,000	1,325	1,465
29,400	24,350	16	30	30	13,000	1,425	1,575
33,400	27,700	16	32	30	14,000	1,625	1,805
42,300	36,600	18	36	30	15,000	1,850	2,090
VERTICAL PUMPS							
48,000	40,000	20	40	24	22,000	2,824	3,136
68,700	57,000	24	48	24	31,700	3,568	3,950
100,000	83,000	30	58	24	50,000	5,865	6,550
107,000	90,000	36	60	24	53,000	6,310	7,000

A vacuum-breaker is located on the right of the drawing. If the water level should rise abnormally in the shell, due to possible stoppage of the circulating pump, the float is raised and opens a valve to the atmosphere, whereupon the inflow of water is stopped, since the circulating water is brought up to the condenser from a lower level by the vacuum. The steam will then escape through a relief valve in the exhaust line.

This type of jet condenser is capable of producing and maintaining a high vacuum, due to the efficient method employed to thoroughly mix the steam and condensing water and the fact that the air is removed by a separate pump. A complete installation of this type of condenser is shown by Fig. 7*a*.

Wheeler Low-level Type Jet Condenser. The standard low-level *Wheeler* jet condensers are shown by Fig. 8. The centrifugal condensation removal pump is submerged in the lower part of the condenser, and is, therefore, always primed.

This type of condenser is adapted for high vacuum work and employs a *Thyssen* centrifugal entrainment pump, described later, to remove the non-condensable gases from the top of the condensing chamber.

Westinghouse Leblanc Jet Condenser. Fig. 10 shows a cross-section through this type of condenser.

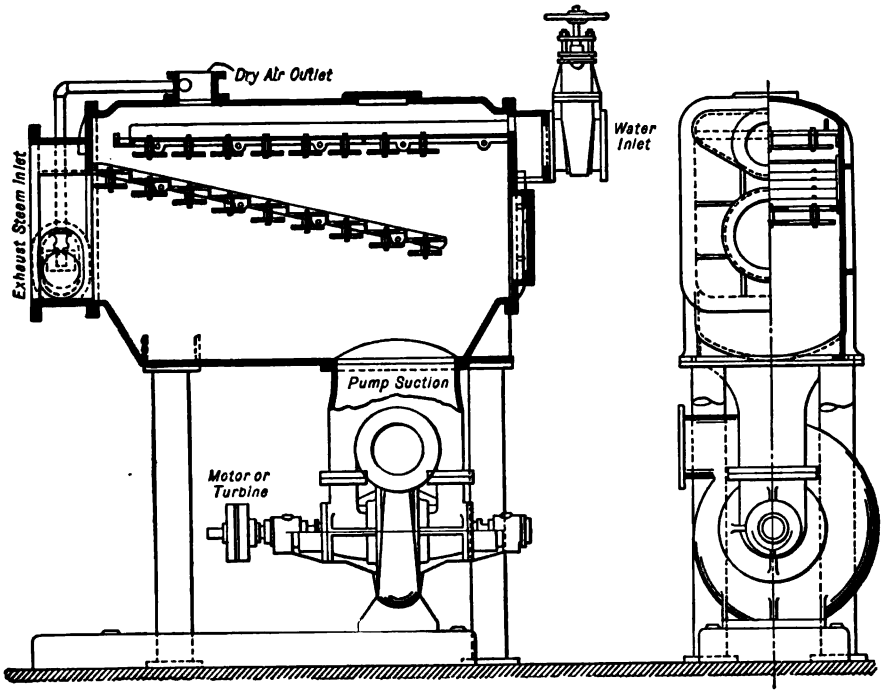

FIG. 7. WHEELER JET CONDENSER.

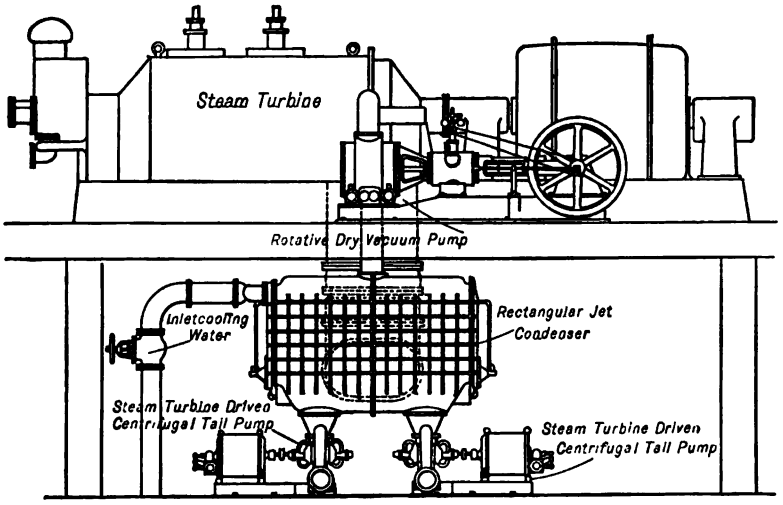

FIG. 7a. INSTALLATION OF WHEELER JET CONDENSER.

FIG. 8. WHEELER LOW-LEVEL TYPE JET CONDENSERS.

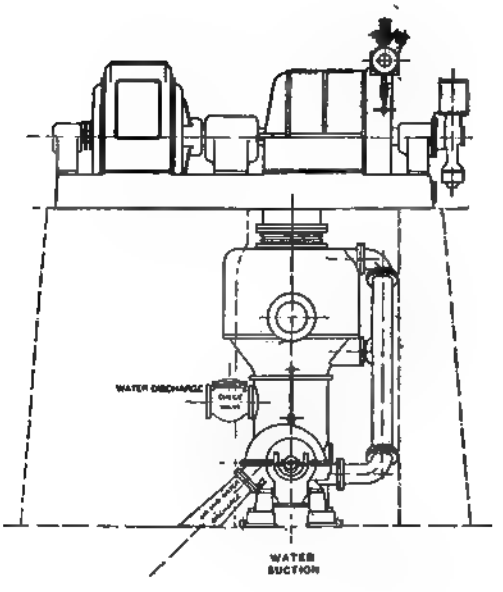

FIG. 9. INSTALLATION OF WHEELER LOW-LEVEL JET CONDENSER.

Condenser Head. The cool water being brought to the condenser inlet *B* is distributed around the entire circumference through annular opening *C* and enters the head through helical distributing nozzles *D*. These nozzles give the water a rotary motion, and break it up into a fine spray, so it mixes intimately with the steam which enters through opening *E*. As the cooling water enters by virtue of the vacuum within the condenser, the total suction head to inlet *B*

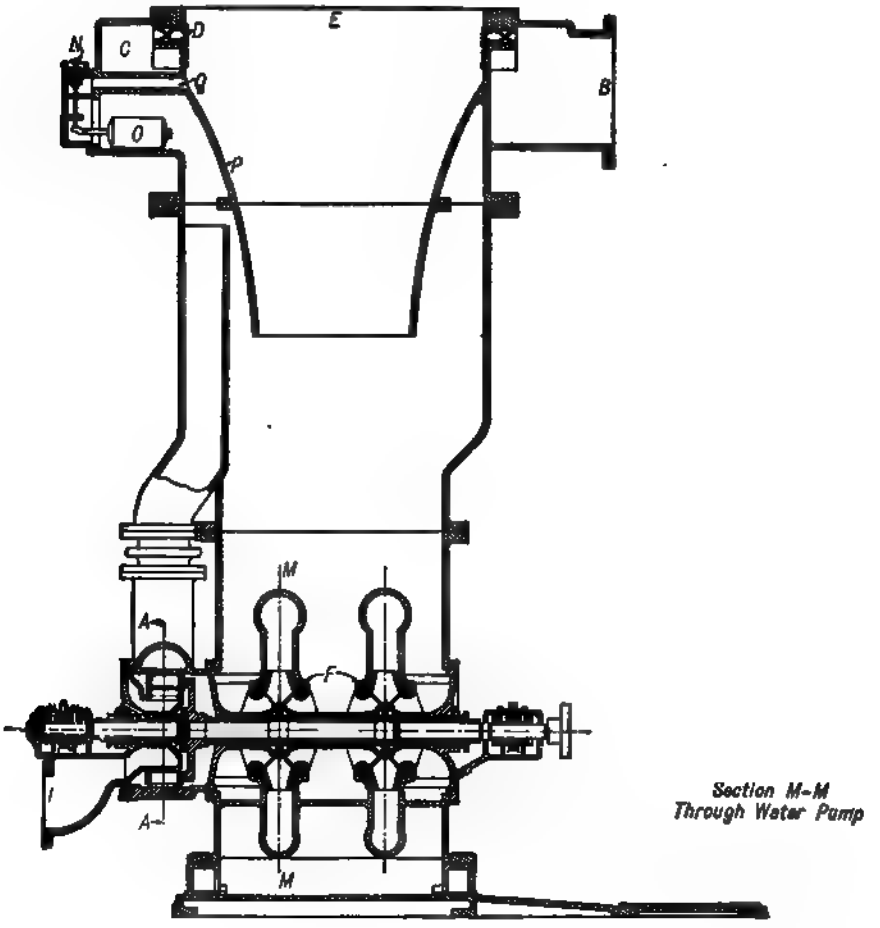

FIG. 10. CROSS-SECTION OF WESTINGHOUSE LEBLANC LOW-LEVEL JET CONDENSER.

should not exceed about 18 ft. While the nozzles *D* are of generous proportions, hand holes are provided so sticks, leaves or other debris which might be brought in with the water may be easily removed.

Water Pump. The mixture of condensed steam and water falls to the bottom of the condenser and is discharged by the double suction centrifugal pump *F*. The pump runner, as well as the stationary guide vanes, are of bronze. If desired, this pump may be designed to discharge against any external head such as might be imposed by cooling towers, spray nozzles or general mill supply.

Air Pump. (Fig. 11.) While the air- and water-pump runners are mounted on the same shaft, the inlet and discharge openings are entirely separate. The air-pump runner is a single piece of cast bronze. The bronze collector cone *G* and blocks *H* are so designed that they may be

Section A–A

FIG. 11. CROSS-SECTION OF AIR PUMP OF WESTINGHOUSE LEBLANC CONDENSER.

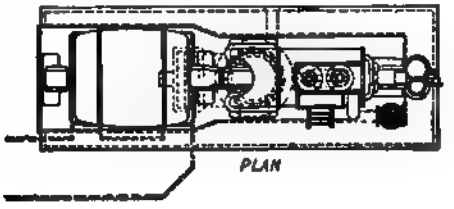

SIDE ELEVATION *END ELEVATION*

FIG. 12. INSTALLATION OF WESTINGHOUSE LEBLANC JET CONDENSER.

easily replaced should wear occur owing to the use of dirty or acidulous water. Water is drawn into the air pump through opening *I* and flows out through the rectangular orifice *J*. The pump runner *K*, rotating in the direction shown, cuts off layers of water which are thrown into the collector cone *G*. Between the successive pistons of water, layers of air drawn in through pipe *L* are imprisoned. As the specific heat of air is low and its weight small compared with that of the water, the air on entering the pump is immediately cooled to the lowest possible temperature. The high velocity of these water pistons is transformed into pressure by means of the diffuser K_1 so that the mixture may be discharged against atmospheric pressure or a some-

what higher head, as the local conditions may demand. If water under pressure is not available for putting the condenser in operation, the steam ejector *M* may be used for this purpose.

The advantages of this pump may be easily seen. There are no close clearances nor rubbing surfaces requiring attention. Neither are there reciprocating parts with their attendant packing troubles.

Owing to the use of water pistons, it is obvious that the air-handling capacity of this pump is much greater than the ordinary ejector arrangement where the air is simply carried along by

FIG. 13. KOERTING EDUCTOR CONDENSER.

friction. The water is discharged through a comparatively large opening which will allow small debris to pass without danger of clogging. Some hydraulic pumps of this general type have a very narrow discharge opening, extending around the entire circumference, and as a result much trouble is experienced from foreign matter, and it is often necessary to use perfectly clean water to insure satisfactory operation.

Vacuum-Breaker. This is of the float type operating the valve *N* which opens, in case the water level in the condenser raises to a dangerous height, and "breaks" the vacuum. As the water enters by virtue of the vacuum in the condenser, the supply is immediately cut off.

This type of condenser is particularly well adapted for high vacuum work. For vacuum of 26″ and under the power consumption of the *Leblanc* air pump is higher than that of the reciprocating type.

Eductor Condenser. Fig. 13 shows, in section, a type of jet condenser designed for use in conjunction with reciprocating engines for vacuum not exceeding 24″ to 26″ mercury.

In the *Koerting* condenser the exhaust steam enters with the cooling water into the con-

densing chamber, where the steam is condensed direct by the water. This physical process being completed, the water jet, united with condensed steam and the non-condensable gases, has to be discharged against the pressure of the atmosphere. This mechanical work is done by the same water jet, which, for that purpose, has to enter the condensing chamber in a solid jet, and after the steam is condensed enters the discharge cone or tail pipe with such a velocity that

FIG. 14. METHOD OF INSTALLING KORTING EDUCTOR CONDENSER.
A, Condenser; *B*, Water Check; *C*, Free Exhaust, *D*, Strainer; *E*, Foot Elbow. C_1 and C_2, Variations of Free Exhaust.

it overcomes the pressure of the atmosphere, being forceful enough to expel the air. To keep the jet straight it is surrounded by a combining tube, in which ports are drilled at a suitable angle, through which the steam from the condensing chamber enters and is condensed by the jet. The holes are cut in an angle tending to give the water a high velocity.

Fig. 14 shows the method of installing this type of condenser.

Table 14 gives the dimensions and rated capacities for eductor condensers.

An example showing the method employed in calculating the power required to operate eductor condensers is given under "Power required to operate condenser auxiliaries."

Koerting Multi-Jet Eductor Condenser. Fig. 15 shows this type of condenser in section designed for high vacuum work in conjunction with steam turbines. A vacuum of 28″ mercury referred to a 30″ barometer may be obtained with this type of condenser. The principle of operation is the same as for the eductor condenser previously described, but has, instead of one

EDUCTOR CONDENSER.

FIG. 15. KOERTING MULTI-JET EDUCTOR CONDENSER.

A, Condenser; *B*, Water Check Valve; *C*, Free Exhaust Valve; *D*, Strainer; *E*, Foot Elbow; *S*, Stand Pipe.

central condensing jet, a number of converging jets, meeting and forming a single jet in the lower part of the condensing tube. This tube is cast in one piece, and consists of a series of concentric nozzles of gradually diminishing bore. The steam flows through the annular passages between the nozzles, which guide it, so that it impinges at suitable angle on the condensing jets.

The multi-jet condensers are considerably shorter than the single-jet apparatus of equal capacity, but, in spite of this, the area of contact between the steam and the water is greater.

FIGS. 17 AND 18. INSTALLATION OF BULKLEY BAROMETRIC CONDENSER.

A further advantage is gained by the form of the condensing tube, which in vertical section is an inverted cone. In the upper part of the tube the steam is in contact with the coldest water, and condensation is keenest, so that a greater weight of steam is condensed per unit of area of contact than is the case in the lower part of the tube, where the water is hotter.

The method of installing this type of condenser is shown by Fig. 16 and Fig. 48.

FIG. 19. BULKLEY BAROMETRIC CONDENSER INSTALLATION SHOWING AIR SEPARATOR.

An example giving the power required to operate this type of condenser appears later in the text. See Table 21 for water consumption of this condenser.

Barometric Condensers. In this type of jet condenser the wet vacuum pump is dispensed with, the removal of water being accomplished by elevating the condenser to a sufficient height (approximately 35′ 0′) above the hot well. The vacuum in this case being maintained by the column of water in the tail pipe, which must be greater than the height of a column of water which would be supported by the difference between the atmospheric pressure and the absolute pressure corresponding to the vacuum maintained in the condenser.

The absolute pressure corresponding to a 28″ vacuum, assuming no air present, is 1 lb. per sq. in. The difference in pressure (at sea level) is 14.7 — 1 or 13.7 lb. per sq. in. Assuming a temperature of water in the tail pipe of 110° F. the density is 61.89 lb. per cu. ft. Under these conditions the water will stand 13.7 × 144/61.89 or 31.8 ft. above the level of the hot well.

Figs. 17 and 18 shows an installation of the *Bulkley* barometric type condenser with double injection pipe and air separating tank.

The object of the contracted passage of the ejector tube is to obtain a high velocity of the

FIG. 20. ALBERGER BAROMETRIC CONDENSER.

water in order to insure the entrainment of the air as fast as it accumulates in the condenser head.

On account of the vacuum maintained in the condenser the actual head, including friction against which the circulating water pump operates, is approximately 15 to 20 feet above the level of water in the hot well. The amount of power required to do this is the entire amount of power expended with this type of condenser.

If a natural head of water is available 17 feet or more above the level of the hot well the circulating water pump may be dispensed with.

Fig. 21. Tomlson Barometric Condenser.

A vacuum of 28″ referred to a 30″ barometer is guaranteed by the manufacturers when sufficient cooling water at 70° F. is available to condense the amount of steam to be handled. A hot well temperature within 10 per cent of that theoretically obtainable is guaranteed for the above conditions.

The distance from the center line of the riser to the center line of the tail pipe is approximately 4′ 0″; hence it is feasible to have the exhaust riser come up inside the power-house wall and the tail pipe on the outside when desired.

The *Bulkley* condenser is provided with an air-separating tank for the larger sizes as shown by Fig. 19.

There are a number of condensers of the barometric type, designed for high vacuum work,

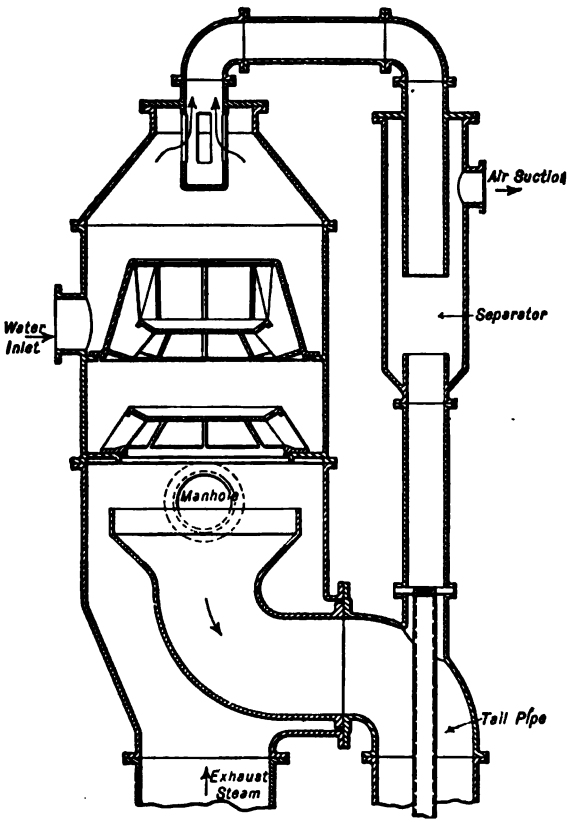

FIG. 22. HELANDER BAROMETRIC CONDENSER.

which dispense with the ejector tube and use a dry-air pump to remove the air, the connection for the pump being taken off at the top of the condenser.

In the *Alberger* condenser, Fig. 20, special provision is made to cool the air and condense out a portion of the vapor mixed with the air before it leaves the condenser in order to relieve the vacuum pump from handling an unnecessarily large volume.

In the *Tomilson*, *Weiss* and *Helander* (Figs. 21, 22 and 44) barometric condensers the condensing water flows over a series of trays in order to present a large surface of water to the steam, taking the place of a spraying device.

In some cases, owing to the physical layout of the ground or flood conditions to be contended with, it is necessary to place the hot well considerably higher than the level of the water in the suction well.

In connection with cooling ponds, the entire system may be operated by one pump, by elevating the hot well at such a height that the overflow will maintain a constant head on the

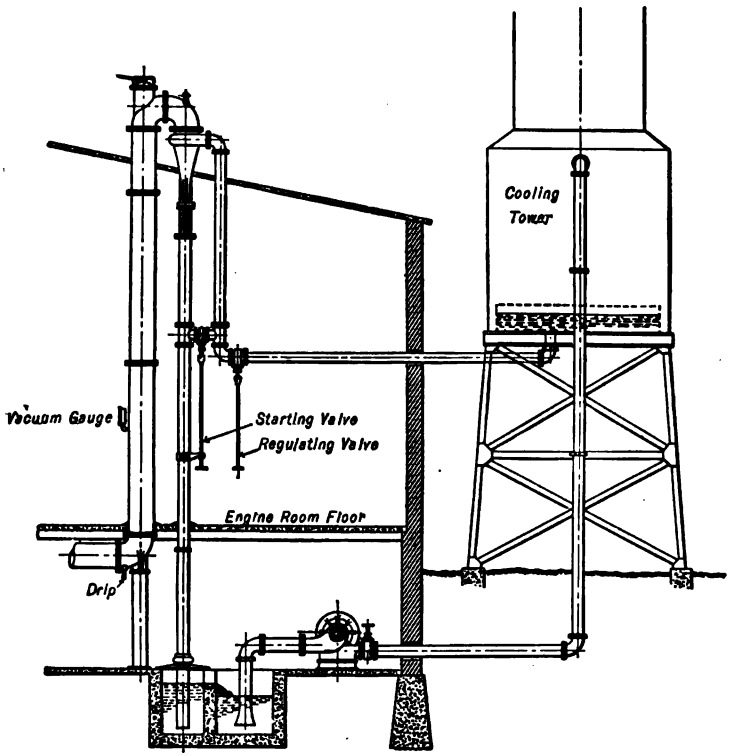

FIG. 23. INSTALLATION OF BAROMETRIC CONDENSER IN CONJUNCTION WITH COOLING TOWER.

spray nozzles, Fig. 24, or, in connection with cooling towers, Fig. 23, the catch basin of the tower may be located so that the level of the water is approximately 18 ft. above the hot well, and the condenser allowed to syphon its water. In this arrangement, only one pump is necessary to operate the system.

SURFACE CONDENSERS

The modern surface condenser equipment designed to produce a high vacuum for large units consists of a (1) *condenser*, (2) *water circulating pump*, (3) *dry air pump*, (4) *condensate pump*.

The *condenser* consists of a cast-iron shell in which are placed a number of brass tubes, through which the condensing water is circulated by the circulating pump; condensation of the steam, passing over and around the tubes, being brought about by the removal of the latent heat of the steam by transfer to the colder tube surface (condensing surface).

Modern surface condensers are either of the double-flow or the multi-flow type.

In the double-flow type the water passes through one bank of tubes and returns through a second bank. (Fig. 25.)

In the multi-flow type the water is passed back and forth through several banks of tubes.

In the larger sizes baffle or rain plates are provided so that the water of condensation from

FIG. 24. INSTALLATION OF BAROMETRIC CONDENSER IN CONJUNCTION WITH COOLING POND.

the upper rows of tubes is not permitted to fall on the lower rows, and thereby reduce the heat transmission of these rows by enveloping them with a blanket of water.

A condenser equipped with rain plates is termed a *dry tube* type surface condenser.

The effect of the baffle or rain plates is to increase considerably the average rate of heat transmission of the tubes producing a corresponding decrease in the tube surface required for a given duty.

A surface condenser equipment, as stated by *C. F. Braun*, should be designed to accomplish the following results:

"*Steam* should enter the condenser, be conducted freely to all parts with least possible resistance, reduced to the lowest practicable temperature (and corresponding pressure), and converted into water.

FIG. 25. SECTION OF STANDARD TWO-PASS SURFACE CONDENSER, HAVING TOP [redacted] INLET, AND ARRANGED FOR OPERATION ON THE WET SYSTEM.

"*Air*, a non-conductor, should be rapidly cleared from the heat-transmitting surfaces, collected at suitable places, practically freed from entrained water and water vapor, and cooled to a low temperature for removal at minimum volume, with consequent least expenditure of mechanical energy.

"*Condensate* should also be rapidly cleared from the heat-transmitting surfaces, freed from

PERSPECTIVE VIEW OF SPIRAL BAFFLE AND AIR COOLER

SECTION THROUGH A-B ELEVATION

FIG. 26. WELL-DESIGNED CYLINDRICAL CONDENSER.

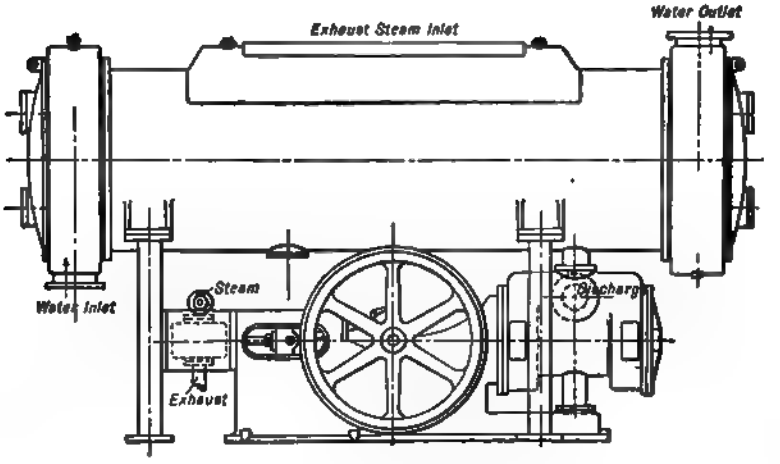

FIG. 27. SURFACE CONDENSER WITH WET VACUUM RECIPROCATING PUMP, FOR MEDIUM-SIZE INSTALLATIONS.

air, collected at suitable points for removal, and returned to the steam generator at the maximum practical temperature.

"*Circulating water* should pass through the condenser with least friction, deposit a minimum amount of precipitated chemicals or débris, and absorb a maximum amount of heat."

Fig. 26 shows a condenser for large installations, designed along the lines indicated by the preceding paragraphs.

Fig. 27 shows a combination of surface condenser and wet vacuum pump of the reciprocating type such as used in medium-size installations.

Fig. 28 shows an arrangement of a *Wheeler* surface condenser equipment designed for high vacuum work in connection with a steam turbine, a wet vacuum pump of the rotary type

FIG. 28. WHEELER SURFACE CONDENSER INSTALLATION.

being employed. The vacuum pump and centrifugal circulating pump in this installation are both driven by a vertical high-speed engine.

Fig. 29 shows a typical *Westinghouse* surface condenser installation in which a separate air pump is employed to remove the air.

The air pump and condensate pump are of the *Leblanc* type as for the *Leblanc* jet condenser.

Heat Transfer in Surface Condensers. The transfer of the heat in the exhaust steam to the cooling water in a surface condenser is dependent upon a number of conditions, each of which effect the result.

The experiments of *Geo. A. Orrok*, Trans. Am. Soc. M. E., Vol. 32, are in general considered to provide the most reliable data available on the heat transfer through condenser tubes.

The following matter, including the diagrams, has been taken from a paper by *C. F. Braun*, Trans. Am. Soc. M. E., 1915.

The transfer of heat from the steam, through the condenser tube, to the cooling water may be represented by the following formula:

Let K_s = heat transfer from steam to tube per sq. ft. per hour per degree difference between the tube surface and mean temperature of the circulating water.

K_w = heat transfer from tube surface to cooling water per sq. ft. per hour per degree difference between the tube surface and mean temperature of circulating water.

C = conductivity of the tube per sq. ft. per hour per degree difference between the inside and outside surface temperatures of tube.

U = B.t.u. transmitted from steam to water per sq. ft. per hour per degree difference between the steam and mean temperature of the circulating water. (Unit heat transmission.)

t_m = mean temperature difference between the circulating water and steam.

t_v = temperature of exhaust steam corresponding to the vacuum.

PUMP PUMP

FIG. 20. WESTINGHOUSE SURFACE CONDENSER INSTALLATION.

$$U = \frac{1}{\frac{1}{K_s} + \frac{1}{K_w} + \frac{1}{C}} \quad \ldots\ldots\ldots\ldots \quad (1)$$

The factors K_s and K_w are dependent upon the condition of the surface of the tubes and upon the velocities of the media from and to which heat is being transferred.

The mean temperature difference t_m between the circulating water and the steam t_v is generally assumed to be reliably stated by *Grashof's* formula:

$$t_m = \frac{t_2 - t_1}{\log_e \frac{t_v - t_1}{t_v - t_2}} \quad \ldots\ldots\ldots\ldots \quad (2)$$

For general purposes it is ordinarily considered sufficiently accurate to use the arithmetical mean as calculated from the formula, $t_m = t_s - \frac{t_1 + t_2}{2}$ in which t_2 = final temperature of circulating water, t_1 = initial temperature of water and t_s = temperature of the steam corresponding to the vacuum.

Condensing Surface Required:

Let W = weight of steam to be condensed per hour.

t_m = mean temperature difference between water and steam.

U = coefficient of heat transmission.

Q = total heat to be removed by cooling water per lb. of steam condensed (usually assumed as 1000 B.t.u. in all cases for simplicity).

S = square feet of cooling surface.

$$S = \frac{W \times Q}{t_m \times U} \quad \ldots \ldots \ldots \ldots \ldots \quad (3)$$

The values of U, Q and t_m may be taken from the diagrams Figs. 30 and 31.

The curve A, Fig. 30, is based on the tests by *Orrok* on clean tubes, the curves C and D are

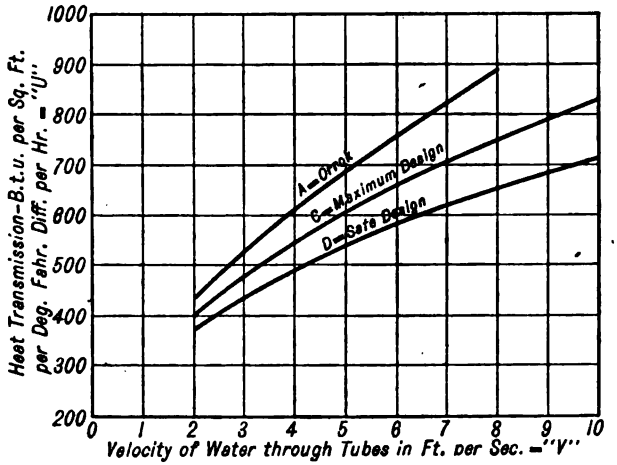

FIG. 30. HEAT TRANSMISSION—VELOCITY CURVES.

recommended by *Braun* as limits for U to be used in the design of modern *dry-tube* surface condensers using copper alloy tubes ¾" to ⅞" inside diameter as the maximum.

The velocity of water through the condenser tubes in practice varies from 2 to 6 ft. per sec. the average being about 4 ft. per sec. or 240 ft. per min.

In using the curves Fig. 31, it is assumed that the values for U are to be applied to modern type *dry-tube* condensers designed along the lines of the condenser shown by Fig. 26.

In the standard type two-pass surface condenser it is usual practice to limit the value of U to approximately 300 B.t.u. for water velocities of 4 to 5 ft. per sec.

The *C. H. Wheeler Mfg. Co.* uses a coefficient U varying from 300 to 400 B.t.u.

Example. Required the amount of cooling surface for a dry-tube type surface condenser to be attached to a 2000 kw. high-pressure turbine. Assume water rate 18 lb. per kw.-hour. Initial temp. circulating water 70° F., 28" vacuum referred to a 30" barometer, temperature corresponding to vacuum 101° F. Final temperature of water 101 − 6 = 95° F. Velocity of water through condenser tubes 5 ft. per sec. U = 540 B.t.u. for safe design, curve D, Fig. 30.

The mean temperature difference, equation 2 or Fig. 31, is:

$$t_m = \frac{95 - 70}{\log_e \frac{101 - 70}{101 - 95}} = 15.2$$

The steam to be condensed per hour is: $W = 2000 \times 18 = 36{,}000$ lb.

The heat to be removed per lb. of steam condensed: assume $Q = 1000$ B.t.u. The tube surface required, equation 3, is therefore: $S = \frac{36000 \times 1000}{15.2 \times 540} = 4{,}386$ sq. ft.

If the condenser is to be of the standard two-pass type a value of $U = 325$ may be used. The tube surface required will be:

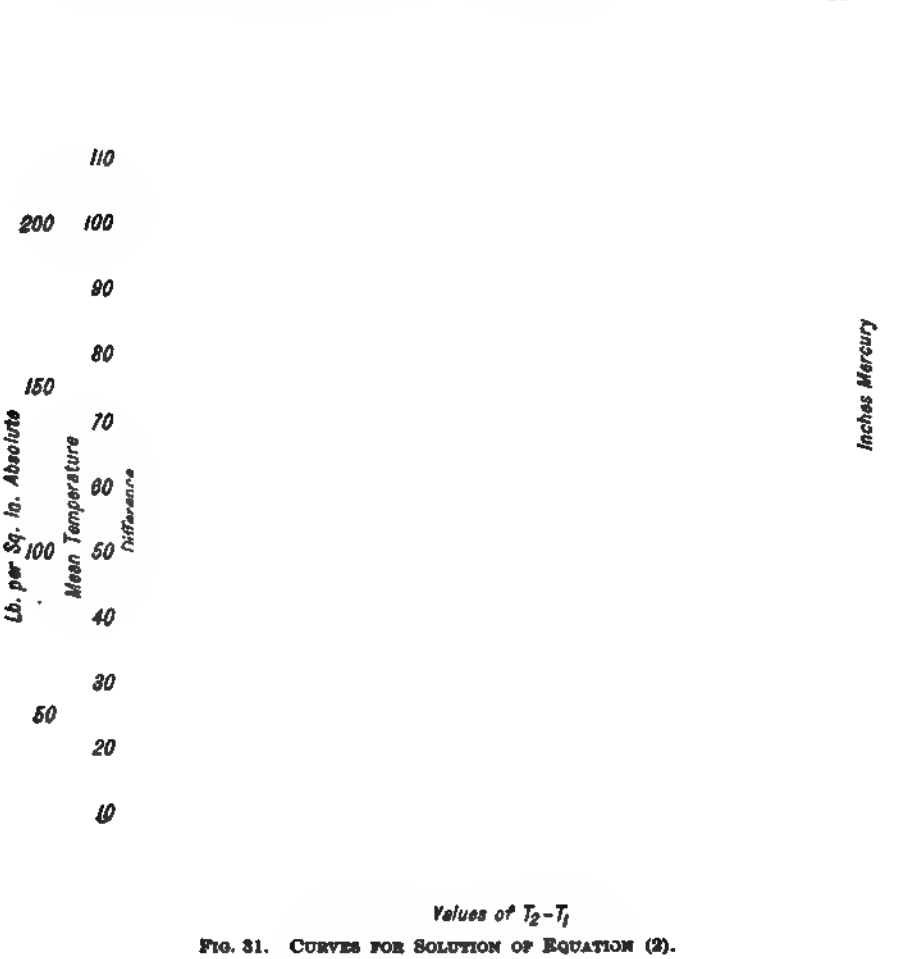

FIG. 31. CURVES FOR SOLUTION OF EQUATION (2).

$$S = \frac{36000 \times 1000}{15.2 \times 325} = 7300 \text{ sq. ft.}$$

Compare the latter figure with the data in Table 8.

The condenser cooling surface for a list of recent turbine installations follows:

TABLE 3

Kw. Turbine	Square Feet Tube Surface	Square Feet Tube Surface Per Kw.	Kw. Turbine	Square Feet Tube Surface	Square Feet Tube Surface Per Kw.
7,500	25,000	3.34	14,000	18,000	1.29
8,000	23,000	2.88	14,000	25,000	1.79
8,000	18,000	2.25	15,000	25,000	1.67
10,000	22,000	2.20	20,000	32,000	1.60
12,000	25,000	2.08			

Amount of Cooling Water Required for Condensers. Condenser calculations are based on the assumed observed vacuum and, as was previously shown, the actual temperature in the condenser, owing to the presence of air in the system, will be somewhat below the temperature corresponding to the observed vacuum.

It is therefore impossible for the final temperature of the cooling water t_2 to rise to the temperature t_c corresponding to the observed vacuum, and in practice, owing to the inefficiency of the heat transfer between the water and steam, condensers are designed for a difference in temperature $(t_c - t_2)$ of 5 to 15 degs. F. This difference is termed "temperature head" or "terminal difference."

In practice condensers are designed for the *normal load* of the machines to which they are to be connected. The initial temperature t_1 of the cooling water is that corresponding to average summer conditions. If the source of supply is a stream an initial temperature of 60° to 70° is ordinarily assumed.

If a cooling tower is to be used in conjunction with the condensing system an initial temperature of 80° F. may be assumed.

The amount of condensing water required may be approximated by the following formula:

Let r_c = latent heat corresponding to the vacuum desired or absolute pressure p_c.

q_c = heat of the liquid corresponding to p_c.

$i_c = r_c + q_c$

x = assumed quality of the exhaust.

= 0.90 to 1.0 for preliminary calculations.

q_x = heat of the liquid corresponding to the temperature t_x of the condensate.

t_1 = initial temperature of the circulating water.

t_2 = final temperature of the circulating water.

$t_x = t_2$ for jet condensers and $q_x = q_2$, heat of liquid corresponding to t_2.

w = pounds of condensing water per lb. of steam condensed.

$$x\,r_c + q_c - q_x = w\,(t_2 - t_1).$$

Assuming $x = 1$, then $w = \dfrac{i_c - q_x}{t_2 - t_1}$ for surface condensers and $w = \dfrac{i_c - q_2}{t_2 - t_1}$ for jet condensers.

It is usually considered sufficiently accurate to assume the value of the numerator as equal to 950 B.t.u. when the steam supplied the prime mover is dry saturated and 1000 B.t.u. when the supply is moderately superheated.

For more refined calculations the data given by Table 4 may be used.

The curves, Fig. 32 (*G. H. Wheeler Mfg. Co.*), are convenient for quickly determining the values of w, the weight of condensing water required per lb. of steam, for various conditions of operation.

Example. Required the weight of condensing water per hour for a 1000-kw. turbine, the water rate of which is 15.5 lb. per kw. when operating with a 28″ vacuum, p_c = 1 lb. absolute. Initial tem-

perature of circulating water assumed as $t_1 = 70°$ F. Assumed difference in temperature between temperature corresponding to the vacuum t_c and the final temperature of the condensing water t_2 equal to 15 degs. or $t_2 = 101.76 - 15 = 86.76°$, $r_c = 1035.6$, $q_c = 69.7$. Assume $x = 0.95$ and $t_x = t_c - 5$ or 96.7°, $q_x = 64.7$.

TABLE 4

Type of Condenser	Vacuum Ins. Mercury	t_x	t_2	Terminal Difference
Standard type jet condensers with wet air pump	24" to 26"	$t_x = t_2 = t_c - 15$ to 20		$t_c - t_x = 15$ to 20
Modern type jet condensers for high vacuum	28" +	$t_x = t_2 = t_c - 2$ to 5		$t_c - t_x = 2$ to 5
Ordinary surface condensers with wet vacuum pump; medium-size installations	27" to 28"	$t_c - 10$	$t_c - 15$	$t_c - t_2 = 10$ to 15
High-grade surface condensers, multi-flow, with both wet and dry vacuum pumps for large installations	28½" +	$t_c - 2$ to 5	$t_c - 2$ to 8	$t_c - t_2 = 2$ to 8

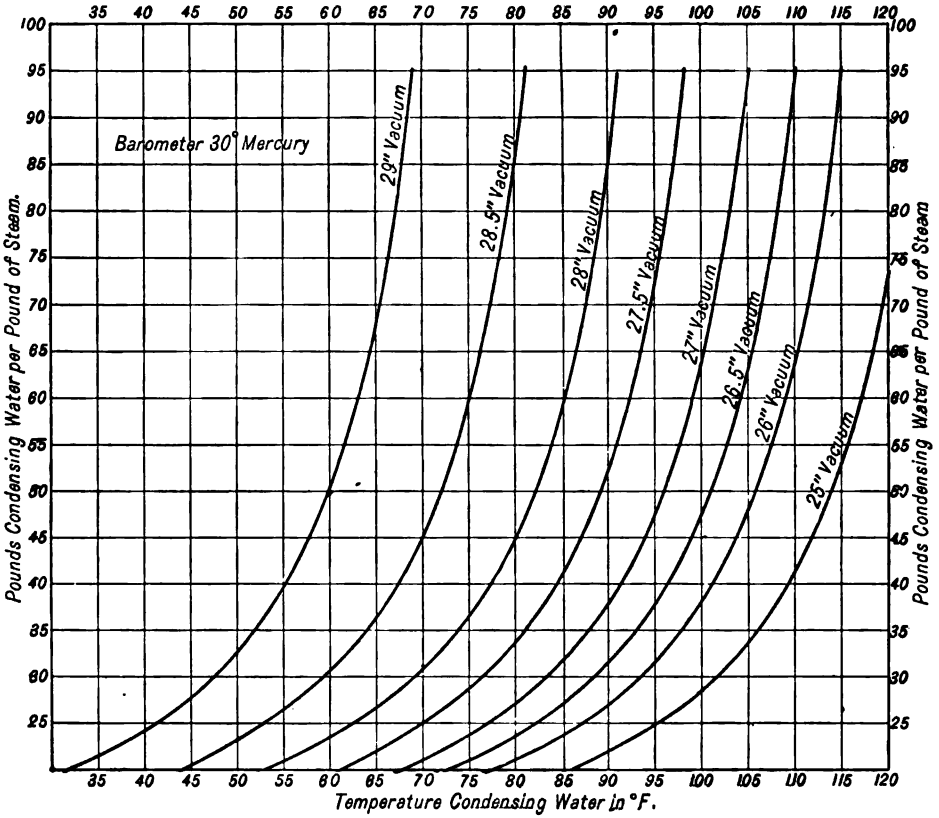

FIG. 32.

To use the diagram, add the desired terminal difference to the temperature of the injection water, and read up from the corresponding point on the base line to the proper vacuum curve. The ratio appears at the left. For example, for 70 degrees water, 15 degrees terminal difference or "temperature head" and 28-inch vacuum, read up from 85 degrees, intersecting the 28-inch vacuum curve at a point corresponding to the ratio of 59 to 1. These curves are intended for turbines or engines using saturated steam at the throttle.

$$\therefore w = \frac{0.95 \times 1035.6 + 69.7 - 64.7}{86.7 - 70} = 59 \text{ lb.}$$

The total weight of water to be supplied condenser per min. is:

$$\frac{1000 \times 15.5 \times 59}{60} = 15{,}241 \text{ lb. or } 1{,}830 \text{ gal.}$$

The table given below shows roughly the degree of vacuum which is commercially obtainable with varying initial water temperatures, without undue expenditure of capital or power, assuming that the conditions prevailing have nothing of an abnormal nature about them. (*M. W. Kellogg Co.*)

Temperature of Water	Vacuum Obtainable
60 deg. Fahr.	28 ½ inches
65 deg. Fahr.	28 ¼ inches
70 deg. Fahr.	28 inches
75 deg. Fahr.	27 ¾ inches
80 deg. Fahr.	27 ½ inches
85 deg. Fahr.	27 ¼ inches
90 deg. Fahr.	27 inches

TABLE 5

TESTS MADE ON WESTINGHOUSE SURFACE CONDENSERS
EQUIPMENT CONSISTING OF CONDENSER, DRY-AIR PUMP, CONDENSATE PUMP AND CIRCULATING PUMP

Rated Capacity Turbine Square Feet Condensing Surface	1,500 Kw. 5,000 Sq. Ft.	2,000 Kw. 4,000 Sq. Ft.	9,000 Kw. 20,000 Sq. Ft.
Barometer	28.99	29.25	30.16
Vacuum at top of condenser—inches, mercury	28.56	27.20	28.96
Absolute total pr. ins. mercury	1.32	2.05	1.20
*Absolute pr. lb. sq. in. p_c	0.64	1.02	0.589
*Temperature steam corresponding to vacuum, degrees Fahr. t_c	87.2	101.8	84.68
Actual temperature mixture at top of condenser t_s	84.0	102.0	88.0
*Steam pr. corresponding to t_s—p_s	0.577	1.008	0.558
*Air pressure $p_a = p_c - p_s$	0.063	0.012	0.031
*Ratio $\frac{p_s}{p_c}$	0.901	0.988	0.947
Vacuum at air pipe connection	28.7	27.2	29.08
Temperature condensate t_x	82.0	100.0	82.0
Initial temperature condensing water t_1	59.0	84.0	66.5
Final temperature condensing water t_2	77.0	100.0	78.0
$t_2 - t_1$	18.0	17.0	11.5
*Terminal difference $t_c - t_2$	10.2	1.8	6.68

* Data supplied by the authors.

TABLE 6

TESTS MADE ON WESTINGHOUSE LEBLANC JET CONDENSERS
(*Westinghouse Machine Co.*)

	National Tube Co., Lorain, Ohio, 1,500 Kw. Westinghouse Low Pressure Turbine.		Michigan Alkali Co., Wyandotte, Mich., 1,250 Kw. Allis - Chalmers Turbine.		Ellsworth Collieries Co., Ellsworth, Penna., 750 Kw. General Electric Mixed Pressure Turbine.		Utica Steam & Mohawk Val. Cotton Mills, Utica, N. Y., 1,000 Kw. Westinghouse Turbine.		
Load in kilowatts	1,700	1,750	800	1,250	800	800	1,000	950	925
Barometer	29.30	29.3	29.47	29.47	29.00	29.00	29.25	29.25	29.30
Vacuum at condenser	26.80	26.7	28.50	28.30	27.85	27.80	27.75	27.60	27.20
Vacuum corrected to 30″ Bar.	27.50	27.4	29.03	28.83	28.85	28.80	28.50	28.35	27.90
Temperature of injection deg. Fahr. t_1	73	73	62	62	54	57	73	70	86
Temperature of discharge deg. Fahr. t_2	105	105	78	83	77	80	90	95	102
Temperature of steam in exhaust line t_x	108	110	79	84	82	85	92	95	103
Terminal difference ($t_x - t_2$)	3	5	1	1	5	5	2	0	1

TABLE 6 (*Continued*)

	Narragansett Electric Lighting Co., Providence, R. I., 4,000 Kw. Westinghouse Turbine.			Empire Dist. Electric Co., Joplin, Mo., 6,000 Kw. Westinghouse High Pressure Turbine.			Mineral Point Public Service Co., Mineral Point, Wis. 1,200 Kw. Westinghouse Bleeder Turbine.		
Load in kilowatts	2,800	3,600	3,000	4,300	2,000	3,900	475	500	550
Barometer	29.90	29.90	29.40	28.91	29.30	29.24	29.00	29.00	29.00
Vacuum at condenser	28.25	27.70	27.40	27.30	28.15	28.00	26.50	26.40	26.40
Vacuum corrected to 30" Bar.	28.35	27.80	28.00	28.39	28.35	28.76	27.50	27.40	27.40
Temperature of injection deg. Fahr. t_1	34	34	42	77	69	67	85	86	88
Temperature of discharge deg. Fahr. t_2	93	101	100	92	80	83.5	108	111	111
Temperature of steam in exhaust line t_s	95	104	101	94	84	86	108	111	111
Terminal difference $(t_s - t_2)$	2	3	1	2	4	2.5	0	0	0

TABLE 7

TESTS MADE ON SURFACE CONDENSERS

(*Prof. R. L. Weighton*, "Trans. Institute Naval Arch.," vol. 48, 1906.)

	Total Cooling Surface, Sq. Ft.	Steam per Sq. Ft. per Hour.	Water per Lb. of Steam.	Rise of Temperature of Cooling Water.	Heat per Sq. Ft. per Hour.	Condenser Pressure, Lb. Absolute.	Steam Temperature at p_c	Initial Temperature of Water.	Final Temperature of Water.	Temperature of Condensed Steam.	Difference, Steam and Warm Water.	Difference, Steam and Hot Well.	Mean Difference of Temperature.	B.t.u. per Sq. Ft. per Deg. per Hour.	Water Velocity, Ft. per Sec.
			w	$t_2 - t_1$	Q	p_c	t_c	t_1	t_2	t_x	$t_s - t_2$	$t_s - t_x$	t_m	K	Vw
A	170	4.19	64.1	15.5	4,160	0.68	89.2	51.0	66.5	71.9	22.7	17.3	29.8	114	0.8
	170	6.47	41.7	22.6	6,100	0.98	101.2	50.6	73.2	94.1	28.0	7.1	38.2	160	0.8
	170	9.58	28.2	34.2	9,230	1.65	119.2	50.1	84.3	117.8	34.9	1.4	50.1	181	0.8
	170	10.94	24.8	39.3	10,660	2.07	127.4	50.0	89.3	128.4	38.1	— 1.0	55.4	198	0.8
B	101	17.22	31.8	30.0	16,440	0.67	88.9	45.3	75.3	90.0	13.6	— 1.1	25.7	640	4.5
	101	18.81	13.3	73.0	18,250	1.95	125.4	45.7	118.7	128.9	6.7	— 3.5	29.5	618	2.1
C	101	12.52	45.9	22.0	12,640	0.51	80.2	46.0	68.0	76.3	12.2	3.9	21.2	597	4.6
	101	18.30	14.2	71.5	18,560	1.71	120.5	42.5	114.0	121.9	6.5	— 1.4	28.3	644	2.0
D	62	35.6	26.0	35.9	33,220	0.96	100.4	41.3	77.2	101.3	23.2	— 0.9	38.5	864	4.6
	62	27.8	14.4	66.3	26,530	2.16	129.0	41.7	108.0	132.0	21.0	— 3.0	46.6	570	2.0

(A)—Old type plain condenser, ¾-inch tubes, 4 feet long, 5 passes.
(B)—"Contraflo" condenser, ⅝-inch tubes, 4 feet long, 4 passes.
(C)—Same as "B" but with separate dry-air pump.
(D)—Same as "B," tube length 2 feet 6 inches.
Data as arranged by *Prof. R. C. H. Heck.*

CIRCULATING PUMPS

The function of the circulating pump, as the name implies, is to either circulate the condensing water through the tubes of a surface condenser—or in the case of jet condensers, lift the water from the source of supply to a sufficient height so that the vacuum maintained in the condenser may be able to complete the lift. In general the *measured* head for the lift by the vacuum should not exceed 20 feet.

Both reciprocating and centrifugal pumps are employed for this purpose. Direct-connected motor or steam-turbine driven centrifugal pumps are quite universally used in electric-power plants.

The efficiency curve for centrifugal pumps designed particularly for this class of service is somewhat flatter than for the usual type of pump, giving a fairly good efficiency over a considerable range.

TABLE 8

JET CONDENSER TESTS

(*Wheeler Condenser & Engineering Co.*)

OLD STYLE JET CONDENSING OUTFIT *

Vacuum Gage	Barometer	Corrected Vacuum Referred to 30-inch Barometer	Steam Temperature Corresponding to Vacuum, Deg.	Temperature of Inlet Water, Deg.	Temperature of Outlet Water, Deg.	Vacuum Corresponding to Discharge Water Temperature
25.8	29.36	26.44	121	54	105	27.83
25.2	29.36	25.84	127	54	106	27.70
25.0	29.36	25.64	129	54	107	27.63
25.5	29.36	26.14	124	54	108	27.56
25.5	29.36	26.14	124	54	104	27.88
25.4	29.36	26.04	125	54	100	28.07
			WHEELER RECTANGULAR JET CONDENSER			
27.70	29.29	28.42	93	51	92.0	28.49
27.65	29.29	28.37	94	51	93.5	28.42
27.80	29.29	28.51	91	51	92.0	28.49
27.50	29.29	28.21	97	51	93.0	28.44
27.60	29.29	28.31	96	51	91.0	28.54
27.85	29.29	28.55	90	51	87.0	28.91

* This condenser was equipped with a dry-air pump.

Fig. 33 shows the characteristic curves for a centrifugal pump designed to operate in conjunction with a barometric condenser, the rating being based on 7500 gal. per min. when operating with a head of 29 feet.

The *maximum measured head* or lift which various degrees of vacuum will overcome may be determined by the following formula, all heads measured in feet of water column:

Let H = total available head due to vacuum.

$= \dfrac{p_b - p_c}{0.43}$ in which p_b = barometric pressure lb. per sq. in. and p_c = absolute pressure corresponding to the vacuum.

h_m = measured head.

h_f = friction head of pipe, valves and fittings.

h_v = final velocity head.

$= \dfrac{v^2}{2g}$ in which v = velocity of water in injection pipe ft. per sec.

$0.50\, h_v$ = loss at entrance to pipe.

Then $H = h_m + h_f + 0.50\, h_v + h_v$.

Example. Determine the maximum measured head for which a 27″ vacuum (referred to a 30″ barometer) will lift sufficient injection water at 70° to condense 42,000 lb. steam per hour. Size of injection pipe 12″ measured length of pipe 50 ft. with 3 elbows in the line.

For the above conditions, assuming a 10° "terminal difference," the final temperature of the condensing water will be 10° less than the temperature corresponding to a 27″ vacuum (3″ mercury absolute pressure) or 115 − 10 = 105°. From the diagram Fig. 32, we find that 27.5 lb. water will be required per lb. of steam condensed. The volume of water required per minute will therefore be: $\dfrac{42{,}000 \times 27.5}{60 \times 62.4} = 309$ cu. ft., or 2317 gal. Area of 12″ pipe = 0.785 sq. ft. Velocity = $\dfrac{309}{60 \times 0.785}$ or 7.0 ft. per sec., $h_v = \dfrac{7^2}{64.32} = 0.762$, $H = \dfrac{14.74 - 1.474}{0.43} = 30.8$ ft. The head lost by friction in the line from Table 2, Chapter on "Pumps," is 1.3 ft. per 100 feet of run.

The head lost for each elbow from Table 3, Chapter on "Pumps," is 0.62 ft.

$$\therefore h_f = \frac{1.3}{2} + 3 \times 0.62 = 2.5 \text{ ft.}$$

Then $30.8 = h_m + 2.5 + 1.5 \times 0.762$, solving for h_m gives 27.2 ft. for the maximum measure lift for the assumed conditions of operation.

If the problem is to determine the size of injection pipe for a given measured head and vacuum it is evidently necessary to solve the equation tentatively. The size of injection pipe connection is ordinarily figured for a velocity of 350 to 550 ft. per min.

Neglecting friction in the tail pipe for a barometric condenser, the following equation may

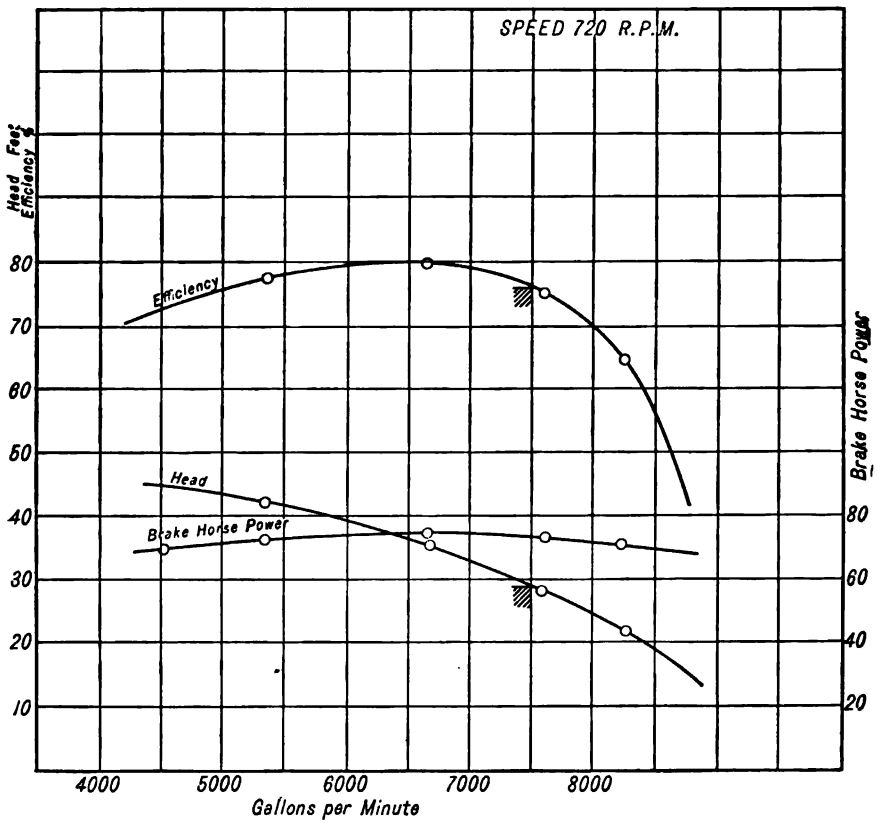

FIG. 33. CHARACTERISTIC CURVES OF CENTRIFUGAL CIRCULATING PUMP USED IN CONNECTION WITH 50-IN. BULKLEY BAROMETRIC CONDENSER FOR A 4500-KW. STEAM TURBINE.

be written: $\frac{v^2}{2g} = h_x - \left(\frac{p_b - p_c}{0.43}\right)$ in which h_x is the height of the column of water in the tail pipe above the surface of the water in the hot well.

Example. Assuming the same data as in the preceding problem for a barometric condenser, determine the minimum height h_x required if the diameter of the tail pipe is made 14 inches. Area pipe = 1.07 sq. ft. Total weight of water to be handled per min. by tail pipe = $\frac{42{,}000\ (1 + 27.5)}{60}$ = 19,950 lb.

or $\frac{19{,}950}{62.4 \times 60} = 5.33$ cu. ft. per sec. Velocity in pipe $v = \frac{5.33}{1.07} = 4.98$ ft. per sec. $\frac{v^2}{2g} = 0.39$, $\frac{p_b - p_c}{0.43} =$ 30.8, $0.39 = h_x - 30.8$ or $h_x = 31.2$ ft.; to allow for friction and other contingencies h_x may be made approximately 32 ft.

Loss of Head Through Surface Condensers. The loss of head through surface condensers may be approximated from the following data taken from a set of curves by *W. V. Treeby* (Power, 1910). The term "pass" refers to the number of turns the circulating water makes in flowing through the condenser tubes.

Suppose the water entered the condenser at one end, flowed straight through the tubes and out at the other end. This would be called a one-pass condenser. Similarly, if the water, instead of passing through all the tubes, flowed in one direction through half the total number of tubes and then returned through the other half, leaving the condenser at the same end as that at which it entered, this would be a two-pass condenser.

For example, with a one-pass condenser, with water flowing at a velocity of 3 ft. per second through ¾-inch o. d. tubes, 6 ft. long, it is found, upon referring to the table, that the frictional head in the condenser would be equal to 0.9 ft.

Now if the tubes are arranged so that the circulating water would flow through half the tubes to one end, then reverse and return through the other half, we would halve the water area, double the velocity and increase the frictional head to 3.5 ft.

TABLE 9

FRICTION HEAD IN SURFACE CONDENSERS

¾" O.D. TUBES

Length of Tube, Feet	Number of Passes															
	1				2				3				4			
	Velocities Feet per Second				Velocities Feet per Second				Velocities Feet per Second				Velocities, Feet per Second			
	3	4	5	6	3	4	5	6	3	4	5	6	3	4	5	6
6	0.9	1.6	2.4	3.5	1.5	3.1	4.8	6.9	2.6	4.7	7.4	10.5	3.5	6.1	9.6	14.0
8	1.0	1.7	2.8	4.0	2.0	3.6	5.5	8.0	3.1	5.4	8.5	12.0	4.0	7.0	11.0	16.0
10	1.1	2.0	3.2	4.5	2.3	3.9	6.3	9.0	3.4	6.0	9.5	13.5	4.5	8.0	12.4	17.9
12	1.3	2.3	3.5	5.0	2.5	4.4	7.0	10.0	3.7	6.7	10.5	14.8	5.0	9.0	13.8	19.8
14	1.4	2.5	3.8	5.6	2.8	4.9	7.6	10.9	4.3	7.5	11.5	16.5	5.5	9.9	15.3	22.3

NOTE.—For ½" tubes, multiply above figures by 1.4, and for 1" tubes, multiply by 0.9.

Example. Required the total head on an 8" centrifugal circulating pump supplying a two-pass surface condenser velocity through pipe 10 ft. per second; length of line, including allowance for ells, 100 ft., velocity through ¾" condenser tubes 4 ft. per sec., length of tubes 8 feet. The *measured head* is the difference between the elevation of the source of supply and the hot well level, and in this example will be assumed as 10 ft. Velocity head in pipe $= \frac{10^2}{2g} = 1.55$ ft.

The *total head* on the pump is equal to 5 (pipe friction Table 2, Chapter on "Pumps") + 3.6 (friction through condenser) + 10 + 1.55 = 20.2 ft.

AIR PUMPS

When the removal pump must handle both the air and water it is termed a *wet-air pump*. If the air is to be removed by a separate pump this pump is termed a *dry-air pump*.

In the standard type of jet condenser the removal pump handles the condensing water, condensed steam and the entrained air.

For surface condensers operating on the wet system the air pump handles only the condensate and air, and is therefore considerably smaller in capacity for an equal weight of steam condensed than the air pump of a jet condenser.

Fig. 34 shows a section through the cylinder of the *Edwards* vertical single-acting "wet" air pump used in connection with surface condensers.

It is noticeable that there is only one set of valves in this pump, namely, the discharge valves. Water enters the cylinder of the pump by gravity from the hot well of the condenser, and on

FIG. 34. EDWARDS AIR PUMP.

the down stroke of the cone-shaped piston is splashed through the ports in the cylinder wall up into the top of the cylinder. This process partially compresses the air already above the cylinder and also draws more air by inspiration from the condenser shell. The up stroke of the piston immediately closes the ports in the cylinder wall and compresses the water vapor and air within the cylinder until the discharge valves are opened and the gases and water discharged.

This pump is of the crank and fly-wheel type with the steam cylinder above the air cylinder. Dimensions of the various sizes of this type of air pump are given by Table 17.

In moderate-size plants it is a quite common arrangement to drive all the pumps used with the condenser equipment with a single engine, turbine or motor.

The dry-air pump is simply an air compressor working between the pressure limits of the vacuum carried in the condenser (suction pressure) and atmospheric pressure (terminal pressure).

Reciprocating and rotary type pumps are used for this purpose, as are also centrifugal entrainment pumps, the latter being a special form of centrifugal pump. Water is discharged radially by the impeller into annular nozzles surrounding the periphery of the impeller and entrains the air through secondary nozzles.

In the "wet" system the water (condensate) serves a useful purpose in sealing the piston and valves of a reciprocating pump against air leakage and in absorbing a portion of the heat generated by compressing the air to atmospheric pressure.

"Actual tests have proven that for ordinary wet-vacuum pumps to handle the mixture of air, vapor, and water, and maintain even moderately high vacuums, it is necessary to cool the condensate 10 to 15 degs. below that due to the vacuum, which of course requires more circulating water and wastes more heat from the system. Another serious objection to the wet-vacuum system is that compressing an emulsion of air and water is a most effective method of mixing

the air with the condensate to return to boilers. Centrifugal air pumps having no clearance space do not lose efficiency at high vacuums, and are rapidly coming into use, but the reciprocating type still has the advantage of requiring less power for operation."

Fig. 35 shows a section through the *Mullen* vacuum pump for surface condensers. This pump is adapted to operate on either the wet or dry systems. When used as a dry-air pump

FIG. 35. MULLEN VACUUM PUMP.
Suitable for High-Vacuum Steam Turbine Requirements up to 500 Kw.

to remove air and water vapor only, a small stream of water is sprayed into the suction to reduce the vapor pressure and absorb the heat of compression, also to lubricate and seal the piston. The sealing water is utilized as "make up" water for the boiler feed.

When operating on the wet system the condensate flows into the pump by gravity. The piston creates a vacuum at each stroke until, near the end of its travel, it uncovers a series of

FIG. 36. CROSS-SECTION OF LEBLANC AIR AND CONDENSATE PUMP.

ports located around the middle of the cylinder and through which the water, air, and vapors are drawn.

The valves used on the discharge ends of the pumps consist of a steel or phosphor bronze plate coiled at one end, the other end being left flat to serve as a flap to the valve.

This pump is driven by either a direct-acting steam cylinder (Fig. 35) or may be of the crank and fly-wheel type (Fig 27).

Centrifugal Entrainment Pumps. The centrifugal type of dry-air pump, owing to the

absence of valves, may be driven at high speed, and is supplanting the reciprocating type to a considerable extent for high-vacuum work in connection with all forms of condensers.

The Leblanc Air Pump. By referring to Fig. 36, which shows an air and condensate pump mounted on the same shaft, it will be seen that air enters the pump through the pipe *C*. To start the pump in operation, high-pressure steam is turned into the connection *D*. The cone

FIG. 37. THYSSEN ENTRAINMENT VACUUM PUMP.
AA, Air Suction Chambers; *BB*, Water Suction Passages; *CC*, Water and Air Discharge Passages.

forms the annular nozzle of a steam ejector, so that on opening the valve in the steam line a vacuum is created in the body of the air pump. The chamber *E* being piped up to a source of water supply, is immediately filled on account of the vacuum created by the steam ejector. Water then flows through the distributing nozzle *F* and is projected in layers through the combining passage *G* into the diffuser *H*. Between the successive layers of water, layers of air are imprisoned; these layers of water (on account of the high peripheral speed of the turbine wheel which throws them off) have a velocity sufficient to enable them to overcome the pressure of the atmosphere and force their way out of the pump in which a high vacuum exists. The layers of water act like a succession of water pistons with large volumes of air between them.

Cold water is used in the air pump; the specific heat of air is low and its weight small compared with that of the water, and therefore the air is immediately cooled on entering the pump to the lowest possible temperature.

The water discharged from the air pump is not appreciably heated, and may, therefore, be returned to the cold well. It must be remembered, however, that in reality a mixture of water and air is discharged, so that in discharging to the cold well, proper provision must be made for separating the air from the water.

The Thyssen Air Pump. Fig. 37 shows a section through this pump. The working principle upon which the pump is designed consists of two continuous water films, discharged radially through annular nozzles surrounding the periphery of two impellers supplying the necessary entrainment water. These water films entrain the air through secondary nozzles and the mixture is discharged against the atmospheric pressure.

The entrainment water is supplied from a tank, usually located under the pump, and is recirculated through the pump as shown by Fig. 38.

Amount of Air to Be Removed from Condensers. The amount of air present in water from

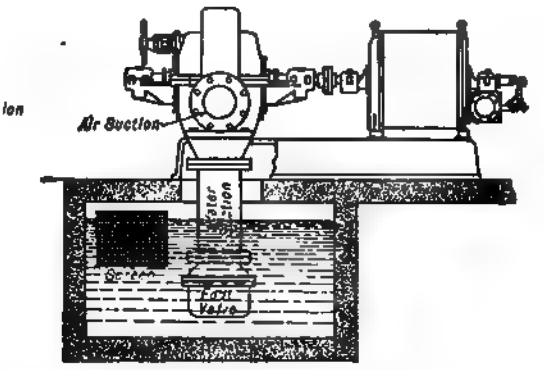

FIG. 38. GENERAL ARRANGEMENT OF TURBINE DRIVEN THYSSEN PUMP OVER TANK CONTAINING THE ENTRAINING WATER.

determinations made by *G. A. Orrok*, Trans. A. S. M. E., Vol. XXIV, is by volume at atmospheric pressure as follows:

Fresh Croton water entering heaters and condensers	4.3%
Leaving feed-water heater at 187°	0.93%
Leaving hot well of condenser	0.269%

The air liberated in the condenser from each cu. ft. of feed water or condensate is 0.0093 − 0.00269 or 0.00661 cu. ft. at atmospheric pressure.

At the low partial pressures existing in a condenser this amount is greatly increased in volume.

The actual amount of air to be removed by the air pump of a surface condenser is greatly in excess of the amount stated above, due to air leakage into the condensing system through the stuffing-boxes of the engine or turbine and the joints in the exhaust piping and condenser.

The amount, as stated by various authorities, varies from 0.35 to 0.55 cu. ft. of "free air" per cu. ft. of feed water when the condensing system is tight and in good condition.

In the discussion following, 0.50 cu. ft. of free air per cu. ft. of feed water or condensate will be assumed as the amount entering the condensing system from the feed water and by leakage.

The above amount corresponds to 0.50 × 0.075/62.4 or 0.0006 lb. of air per lb. of feed water at atmospheric pressure and 60° to 70° F. With a jet or barometric condenser, in addition to the amount of air entering with the condensate and leakage, there is an additional amount of air liberated by the condensing water that must be taken into account.

The air liberated by the condensing water amounts to approximately 2 per cent by volume of the water supplied.

With an initial temperature of condensing water of 60° F. and 4° "terminal difference," approximately 26 lb. water is required to condense 1 lb. steam for a 28" vacuum corresponding to 1 lb. per sq. in. absolute back pressure.

For the assumed condition of operation the amount of air liberated by the condensing water will be approximately $0.02 \times 26/62.4$ or 0.0083 cu. ft., per lb. of steam condensed, measured at atmospheric pressure and 60° to 70° F. This amount corresponds to $0.0083 \times 0.075 = 0.00062$ lb. of air per lb. of steam condensed.

The weight of air to be removed, based on a 28″ vacuum per lb. of steam condensed for surface and jet condensers for the conditions assumed is:

Surface condensers	0.0006 lb.
Jet condensers	$0.0006 + 0.00062 = 0.00122$ lb.

The volume of saturated air to be removed by an air pump depends upon the temperature of the mixture at which it is removed.

In the case of a wet-air pump this temperature will necessarily be that of the condensate. With a dry-air pump, however, it is possible to reduce this temperature to within a few degrees

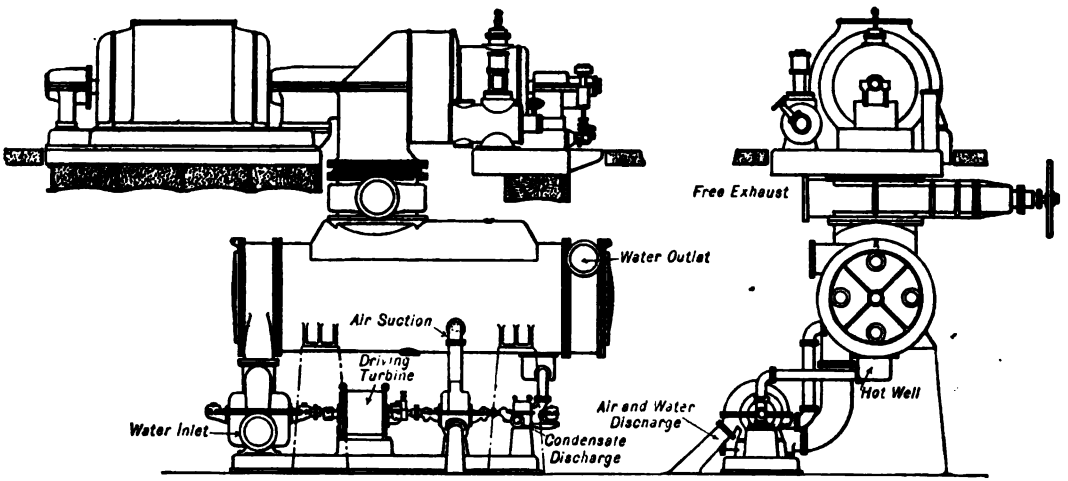

FIG. 39. INSTALLATION OF THYSSEN AIR PUMP IN CONJUNCTION WITH A SURFACE CONDENSER.

of the initial temperature of the cooling water if special provision is made in the design of the condenser. This is accomplished by removing the air so that it will be brought into contact with the coldest water in jet condensers and the coldest tubes in surface condensers.

The volume of a saturated mixture of air and water vapor per lb. of dry air may be determined by making use of *Dalton's* law and the law of perfect gases.

Let t_s = observed temperature of mixture.

$T_s = t_s + 460$ = absolute temperature of mixture.

p_c = observed pressure absolute lb. per sq. in.

p_s = pressure of saturated water vapor corresponding to t_s (see Tables on the Properties of Saturated Steam, Chapter II).

p_a = pressure of air corresponding to t_s, lb. per sq. in.

$= p_c - p_s$.

V_a = volume in cu. ft. of a saturated mixture of water vapor and air per lb. of air.

$144\, p_a V_a = R T_s = 53.35\, T_s$.

$$V_a = \frac{53.35\, T_s}{p_a \times 144} \text{ cu. ft.}$$

Example. Required the volume of a saturated mixture of water vapor and air per lb. of dry air for a condenser pressure $p_c = 1$ lb. corresponding to a 28″ vacuum, temperature of condensate $t_s = 90°$.

$p_s = 0.698$ lb. Then $p_a = 1 - 0.698 = 0.302$ lb. $V_a = \dfrac{53.35\ (90 + 460)}{0.302 \times 144} = 675$ cu. ft.

The curves Fig. 40 were obtained by calculation similar to the foregoing and are useful in determining the volume of the vapor mixture to be removed by the air pump of a condenser.

With both jet and surface condensers the size of the air pump and the power consumed in its operation depend largely upon the temperature at which the non-condensable gases are

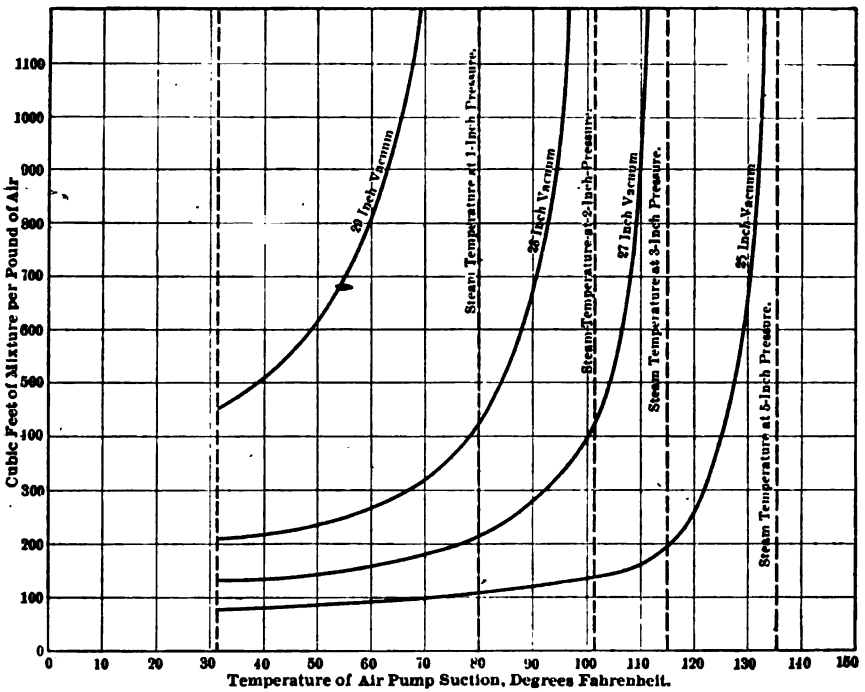

FIG. 40. MIXTURE PER POUND OF AIR AT DIFFERENT TEMPERATURES AND PRESSURES.

withdrawn. This temperature determines the weight of air in each cubic foot of the mixture of steam and air passing to the pump. If with a 28-inch vacuum the air-pump suction be at 90 degrees Fahrenheit, an air pump to remove *one pound of air* and the steam mixed with it must have a volumetric capacity of about 675 cu. ft. But if the suction temperature instead of being 90 degrees were 70 degrees, the volumetric capacity of the pump need be only 320 cu. ft.

Assuming that the initial temperature of the cooling water is 60° F. and that the temperature of the mixture at the end of the suction stroke or at the beginning of compression is 90° F., the volume of the mixture, V_a per lb. of air for a 28″ vacuum, is approximately 670 cu. ft. from Fig. 40.

The volume to be removed by the air pump based on the preceding assumptions as to the weight of air to be removed will be per lb. of steam condensed:

Surface condensers, $0.0006 \times 670 = 0.40$ cu. ft. measured at 90° F.

Jet condensers, $0.00122 \times 670 = 0.82$ cu. ft. measured at 90° F.

The above figures correspond to 25 cu. ft. of mixture per cu. ft. of condensate for surface condensers and 51 cu. ft. for jet condensers.

Capacity of Dry-Air Pumps.

Let v = volume of steam condensed per minute, cu. ft.

v_s = volume of saturated vapor to be removed per minute, cu. ft.

= $v \times$ number of cu. ft. of air per cu. ft. of condensate entering system per min.

E = volumetric efficiency of air pump.

D = pump displacement required per minute, cu. ft.

$$D = \frac{v_s}{E}.$$

According to the preceding calculations and assumptions as to the weight of air entering the system for a 28″ vacuum, $v_s = 25\,v$ for a surface condenser and $v_s = 51\,v$ for a jet condenser. With an assumed volumetric efficiency $E = 0.85$, $D = 30\,v$ for surface condensers and $D = 60\,v$ for jet condensers. *Gebhardt* gives the following values as representing current practice:

$D = 20\,v$ to $30\,v$ for *vacua* 27″.
$D = 35\,v$ to $50\,v$ for *vacua* 28″.

Example. Required the displacement for a dry-air pump to be used in conjunction with a surface condenser attached to a 2,000 kw. turbine, 28″ vacuum to be maintained with 60° cooling water. Water rate of turbine, at normal load, 18 lb. per kw.-hour. $v = \frac{18 \times 2000}{62.4 \times 60} = 9.6$ cu. ft. volume of condensate per min.

Assuming the same data as in the preceding discussion, $D = 30v$ or 288 cu. ft. per min. This displacement is obtained with a 8½″ × 12″ double-acting pump running 74 r.p.m. or with a 24″ × 12″ single-acting pump operating 72 r.p.m.

Capacity of Wet-Air Pumps for Surface Condensers. In this case the pump must handle the condensate as well as the air. Making use of the same data as given for dry-air pumps for a 28″ vacuum,

$D = 30\,v + v = 31\,v$ for surface condensers.

A practical rule given by some authorities for surface condensers is:

$D = 20\,v$ for 26″ vacuum.
$= 30\,v$ for 27″ vacuum.
$= 40\,v$ for 28″ vacuum.

Capacity of Wet-Air Pump Standard Jet Condensers. In this case the pump must handle the air, condensate, and the cooling water. Assume 0.00122 lb. air per lb. of steam entering system with the feed water and cooling water as previously stated. With a 27″ vacuum and 100° hot well temperature $V_a = 400$.

Then $0.00122 \times 400 = 0.49$ cu. ft. volume of saturated vapor per lb. of condensate.

Let V = volume of cooling water per lb. condensate, cu. ft.

v = volume of 1 lb. condensate.

= 0.016 cu. ft.

v_s = volume of air mixture per lb. condensate.

Q = total volume to be removed per lb. of condensate.

$= V + v + v_s$.

For a 27″ vacuum and 63° cooling water and 15° "terminal difference" 26 lb. water will be required per lb. steam condensed.

$$V = \frac{26}{62.4} = 0.42,\quad v = \frac{1}{62.4} = 0.016,\quad v_s = 0.49.$$

$Q = 0.42 + 0.016 + 0.49 = 0.92$ cu. ft. With an assumed volumetric efficiency, $E = 75$ per cent, $D = 1.23$ cu. ft. per lb. of steam, or $D = 3$ cu. ft. per cu. ft. of cooling water supplied ($D = 3\ V$). Average practice gives $D = 3\ V$ for single-acting air pumps and $D = 3.5$ for double-acting pumps (*Gebhardt*) as the displacement required for the air pump of the ordinary type of jet condenser used in connection with reciprocating engines for a 26" vacuum.

Power Required to Operate Condenser Auxiliaries. *Dry-Air Pumps.*

Let p_c = condenser pressure absolute lb. per sq. in.
p_b = barometric pressure absolute lb. per sq. in.
D = displacement of air pump cu. ft. per min.
V_b = volume at end of compression, cu. ft.
W = work of compressor ft.-lb. per min.
n = exponent of compression curve.
= 1.4 (approx.).

Neglecting clearance, we have the relation:

$$W = \frac{n}{n-1} p_c D \left[1 - \frac{p_b V_b}{p_c D}\right] \text{ ft.-lb. per min.}$$

$$= 3.45\ p_c D \left[1 - \frac{p_b V_b}{p_c D}\right]$$

In the above equation p_c, D and p_b are known or assumed and V_b is obtained from the relation:

$$p_c D^n = p_b V_b^n \text{ then } V_b = D\left(\frac{p_c}{p_b}\right)^{\frac{1}{n}} = D\left(\frac{p_c}{p_b}\right)^{0.71}$$

$$\text{i.hp.} = W/33{,}000.$$

The following diagram, Fig. 41, is based on a barometric pressure $p_b = 14.7$ lb. sq. in. and one cubic foot of air and vapor mixture per minute.

To obtain the expected or probable brake horsepower of air pump, add 30 to 50 per cent to the theoretical i.hp.

Example. Required the probable brake horsepower of a dry-air pump attached to the surface condenser of a 2000 kw. turbine in a preceding example, $D = 288$ cu. ft. per min. for 28" vacuum. The theoretical i.hp. $= 0.0177 \times 288 = 5.1$. Adding 40 per cent gives 7.2 as the probable brake horsepower required.

The power consumption for the wet-vacuum pump of a surface condenser may be assumed the same as for a dry-vacuum pump. The extra power required to handle the water, unless it is to be pumped some distance to the hot well or heater, is relatively small.

The power required to operate the wet-vacuum or removal pump of a jet condenser may be estimated by the following formula:

Let p_c = absolute pressure corresponding to the vacuum lb. per sq. in.
p_b = barometric pressure.
h = head of water in the condenser approximately 3 to 5 ft.
H = effective head pumped against, ft.

$$= \frac{p_b - p_c}{0.43} - h.$$

C = total weight of condensed steam and cooling water per hour, lb.
E = efficiency of removal pump.

$$\text{Brake horsepower} = \frac{C\ H}{60 \times E \times 33{,}000}.$$

Example. Required the brake horsepower of a centrifugal removal pump used in conjunction with a "low level" jet condenser attached to a 2000 kw. turbine. 28" vacuum. Initial temperature cooling water 70° F., terminal difference 10° F. Ratio of cooling water to steam condensed, from curves Fig. 32, is 45. Assumed water rate of turbine 18 lb. per kw.-hour

$$C = (1 + 45)\ (2000 \times 18) = 1{,}656{,}000 \text{ lb.}$$

$p_b = 14.7$. $p_c = 2$. $h = 4$ ft. $H = 26$ ft: Assumed efficiency of pump $E = 0.50$. Brake horsepower $= \dfrac{1{,}656{,}000 \times 26}{60 \times 0.50 \times 33000} = 43.5$.

The power required to operate the "wet" air pump for a jet condenser may be estimated by taking the sum of $W + C$, as in this case the pump must handle both the air and water.

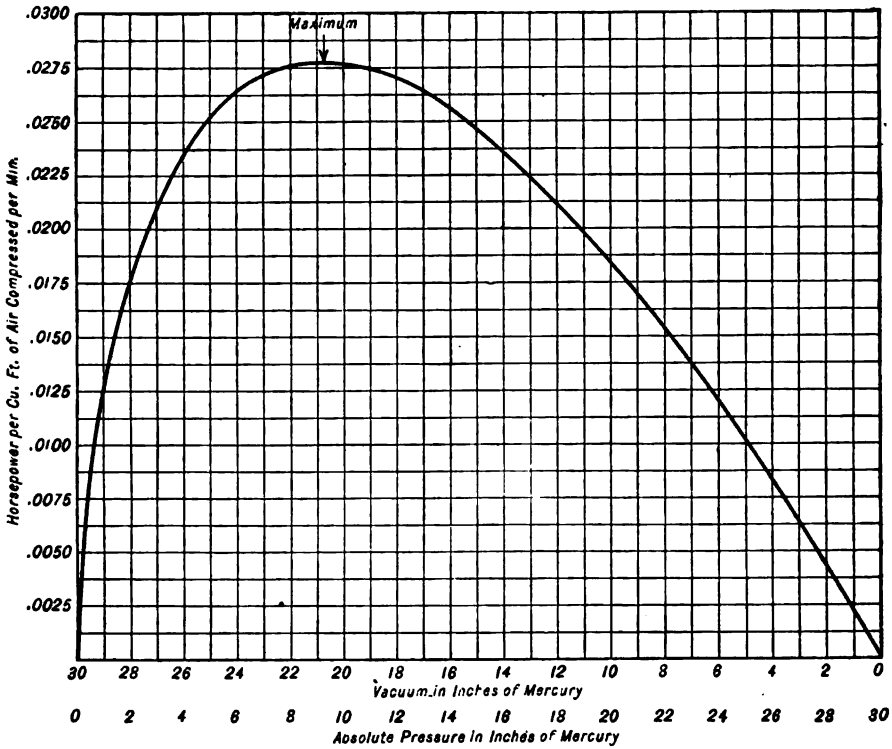

FIG. 41. POWER REQUIRED TO OPERATE AIR PUMPS.

An exact estimate of the power consumption of the auxiliaries for a proposed installation is obviously impossible. The total power consumption is, however, not a very large percentage of power developed by the main units and may be approximated, with sufficient exactness, from the data already given for practical purposes of design.

In practice the power consumption for the auxiliaries is approximately 2 to 5 per cent of the power developed by the main units. See Table 10.

The steam required for operating the auxiliaries, however, depends upon the type of drive selected and will exceed the percentages stated above if steam engines or turbines are used for the purpose.

Example. Required the power consumption of the auxiliaries (circulating pump and wet-vacuum pump) for a surface condenser connected to a 2000 kw. turbine; estimated water rate of turbine 18 lb. per kw.-hour. Conditions of operation to be 28" vacuum referred to a 30" barometer. Initial temperature of circulating water, 70° F. Assumed "terminal difference" $(t_c - t_2) = 15°$. Ratio condensing water to steam = 59. Steam temperature, $t_c = 102°$ F. Total head for circulating pump = 15 ft.

Assumed displacement for wet-vacuum pump 40 × volume of steam condensed or $40 \times \frac{2000 \times 18}{62.4} = 23{,}080$ cu. ft. per hour or $D = 385$ cu. ft. per min.

The theoretical power required for $D = 1$ from Fig. 41 is 0.018. Assuming a 40 per cent loss, the expected brake horsepower of air pump is $1.4 \times 385 \times 0.018 = 10$.

The brake horsepower of the circulating pump, with an assumed efficiency of 55 per cent, is:

$$\frac{2000 \times 18 \times 59 \times 15}{60 \times 0.55 \times 33{,}000} = 30.$$

The total estimated brake horsepower required is, therefore, $30 + 10 = 40$.

Assuming that the pumps are driven by motors having an efficiency of 85 per cent and an assumed loss of 10 per cent in the line and transformers, the power required at the generator terminals is $\frac{40}{0.85 \times 0.90}$ = 52 horsepower. The horsepower output of the generator is $1.34 \times 2000 = 2680$.

The power required to operate the condenser auxiliaries is, therefore, 52/2680 = 0.02 (nearly), or 2 per cent of the power developed by the main units. The steam used by the condenser auxiliaries, in this case, is 52 × 18 or 936 lb. per hour.

TABLE 10

POWER CONSUMPTION OF CONDENSER AUXILIARIES FROM TESTS

Type of Condenser	Vacuum Ins. Mercury Referred to a 30" Bar	Initial Temperature Cooling Water Deg. Fahr.	Ratio of Cooling Water to Steam Condensed	Weight of Steam Condensed per Hour	Per Cent. of Total Power Used by Condenser Auxiliaries	References
Jet	27.1	82	....	37,500	2.2	Proc. Inst. E. E., Jan., 1905.
Leblanc Jet	28.0	71	45.8	28,750	2.6	
Barometric	27.0	50	18.0	128,000	1.1	N. W. El., Chicago.
Barometric	27.8	40	30.0	70,000	1.0	South Side El., Chicago.
Surface	....	..	....	11,200*	2.5	Citizens' Light, Heat and Power Co., Johnstown, Pa.
Surface	....	..	....	36,000*	6.4	Louisiana Purchase Exposition.
Surface	28.2	67	90.0	95,200	2.5	Edison Co., Boston.
Surface	....	..	....	10,250	8.1	Nashua Light, Heat and Power Co.
Surface	28.5	80	....	32,000	4.1	Los Angeles.

* Estimated at 18 pounds per kw.-hour.

Unless there is the equivalent of approximately 10 to 12 per cent of the total steam available for heating the feed water from other steam driven auxiliaries (feed pumps, stokers, fans, etc.), there is no gain in economy by driving the condenser auxiliaries by motors, as the above mentioned percentage of the heat in the exhaust may be returned direct to the boilers by means of a feed-water heater.

Example. Assume in the preceding example that the condenser auxiliaries and the feed pumps are steam driven. If the condenser auxiliaries are operated by a high-speed engine having a water rate of 35 lb. steam per i.hp.-hour and the mechanical efficiency of the engine is 85 per cent, the steam used per hour will be: $\frac{40 \times 35}{0.85} = 1647$ lb.

The weight of steam used by a direct-acting boiler-feed pump, the water rate of which is 120 lb. per water horsepower-hour for a boiler pressure of 150 lb. gage, may be calculated as follows:

Assume an efficiency of pump $E = 0.80$ and neglect the comparatively small weight of feed water required by feed pump.

Then $\frac{150 \times (2000 \times 18 + 1647)}{0.43 \times 60 \times 0.80 \times 33{,}000} = 8.7$ delivered water horsepower of feed pump.

The steam consumption of the feed pump is, therefore, 120×8.7 or 1044 lb. per hour. The total steam required for the auxiliaries is $w = 1647 + 1044 = 2691$ lb.

$R = \frac{w}{W+w}$ or $\frac{2691}{(2000 \times 18) + 2691} = 0.07$ or 7 per cent of the total steam generated is used by the auxiliaries.

Assuming a loss in temperature of 10° in the condensate returned from the surface condenser, the initial temperature of the feed water t_1 may be assumed as 90° F.

Then the final temperature of the feed water t_2 is: $t_2 = 0.9\ [(iR + (1 - R)\ (t_1 - 32)] + 32$ (Chapter on "Feed-Water Heaters").

With an open type heater, atmospheric exhaust $i = 1151.7$.

$$t_2 = 0.9\ [(1151.7 \times 0.07 + (1 - 0.07)\ (90 - 32)] + 32 = 153°\ \text{F.}$$

Power Required to Operate Eductor Condensers. The following example is quoted from a bulletin issued by the *Schutte and Koerting Co.:*

Standard Single-Jet Eductor Condenser. With injection water at a temperature of 60 deg. Fahr. and barometer at 30 inches, eductor condensers will maintain a vacuum of 24 in. hg. column, with a proportion of water to steam of 25 to 1. In most instances the quantity of water used is of importance only in relation to the power required for working the plant, and in this respect the installation of eductor condensers compares favorably with either surface or jet condensing plant.

For comparison a compound condensing plant for a 1,000 d.hp. engine may be taken. Assuming a steam consumption of 20 lb. per d.hp., the plant would condense 20,000 lb. of steam per hour, and a 12″ *Koerting* condenser, using 1050 gallons of water per minute, would maintain a vacuum of 24 in. hg. The condenser is 8 feet long, and with 15 feet head of water and a 2 feet long discharge pipe, the total difference would be 25 feet and the actual hp. required $(1050 \times 25 \times 8.3) \div (33{,}000) = 6.6$. An efficiency of 50 per cent. can be obtained with electrically driven centrifugal pumps with full allowance for motor-pump and dynamo losses. The actual d.hp. required for working such a plant would be $(6.6 \times 100) \div 50 = 13\frac{1}{2}$ d.hp., or less than $1\frac{1}{2}$ per cent of the power developed by the main engine.

In this calculation no allowance is made for loss by friction in pipes or for gravitation flow from the hot well, as similar allowance would have to be made with any condensing plant.

Multi-Jet Eductor Condensers. Taking, as example, a 1000 kw., reciprocating set, using at full rated output 20,000 lb. of steam per hour, a multi-jet condenser, using 72,800 gallons of water per hour, ratio 30 to 1, would maintain 27″ mercury vacuum when dealing with this weight of steam with water supplied at a temperature of 60° Fahr. and barometer 30″. The condenser would be 6 feet long and the water would have to be delivered at a pressure equal to 21 feet head at the level of the inlet flange. The lift for the circulating pump would be, therefore, 6 ft. plus 21 ft. plus allowance for friction losses and difference of level between the pump intake and the condenser outlet flange.

Assuming an allowance of 6 feet would suffice for these last items, the pump duty would be 1200 gallons per minute through a total lift of 33 feet, representing 9.9 water horsepower. The combined efficiency of the motor-driven centrifugal pump should be not less than 60 per cent, and the power required would be 11 kw., or 1.1 per cent of the full load output of the set.

With a turbine of the same size requiring a vacuum of full rated output of 27¾″ mercury a condenser using 106,024 gallons of water per hour, ratio 44 to 1, would be needed, and the power required would be $1.1 \times \frac{106{,}024}{72{,}800} = 1.6$ per cent.

With an exhaust steam turbine of the same capacity, using, say, twice the weight of steam per kilowatt output, the power required for working the condenser with 28″ vacuum would be 3.6 per cent of the full load output. With circulating water at a temperature of 70° Fahr., the power required, other conditions being as above, would represent about 2 per cent, 5 per cent and 10 per cent of the

full load outputs, and at 75° Fahr. about 3 per cent, 7½ per cent and 15 per cent. If recooled water has to be used for condensing, it is important that efficient cooling arrangements be adopted, as with water at temperatures above 75° Fahr. the quantity of circulating water and the power required for working the condensing plant become disproportionately high.

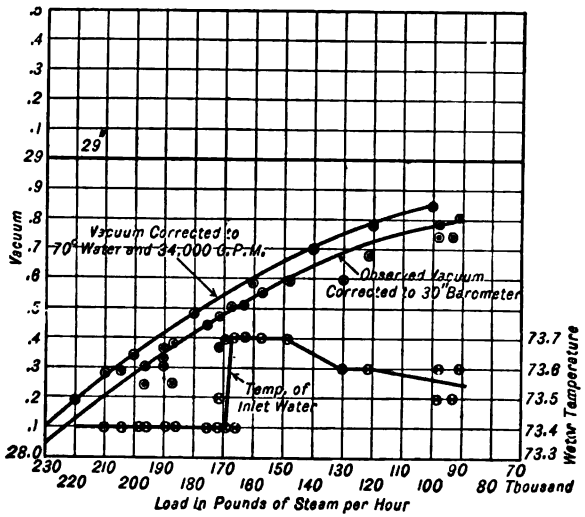

FIG. 42. RESULTS OF CONDENSER TESTS.

Surface Condenser Test. The results of a test made on a *Wheeler* surface condenser installed at the south works of the *Illinois Steel Co.* are shown graphically by Figs. 42 and 43. This condenser contains about 6000 1-in. tubes, corresponding to approximately 25,000 sq. ft.

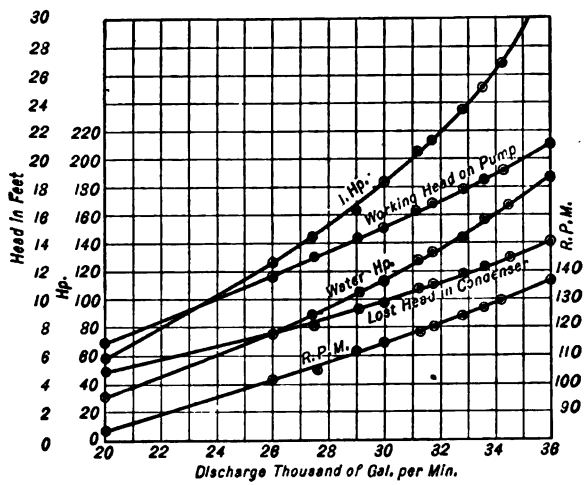

FIG. 43. RESULTS OF TESTS OF CENTRIFUGAL CIRCULATING PUMP.

of surface. The circulating water makes two passes through the tubes, entering at one end and passing through the lower bank of tubes on both sides of the center, returning through the top bank to the discharge.

TABLE 11
APPROXIMATE DIMENSIONS OF WEISS COUNTER-CURRENT CONDENSERS

Size of Condenser																	Weights	
Number	*A*	*B*	*C*	*D*	*E*	*F*	*G*	*H*	*I*	*J*	*K*	*L*	*M*	*N*	*O*	*P*	Water	Cond.
VIII	22″	8″	5″	39′ 6″	36′0″	44′3″	42′ 1″	4′ 0″	4′ 0″	.....	.....	.....	.....	3′ 9½″	2′4½″	14″	4,788	15,000
IX	24″	10″	5″	40′ 8″	36′5″	46′1 ¼″	43′11″	4′ 0″	4′ 0″	.....	.....	.....	.....	3′11½″	2′4½″	15″	4,950	15,500
X	30″	12″	7″	39′11½″	36′0″	46′2¾″	43′ 4½″	4′ 2″	4′ 6″	12′0″	12′10″	9′0″	9′ 0″	4′ 4″	2′6″	15″	6,145	13,200
XI	30″	12″	7″	40′ 6″	36′0″	46′9″	43′11″	4′ 2″	4′ 6″	12′0″	12′10″	9′0″	9′ 0″	4′ 7″	2′9″	16″	6,900	14,500
XII	36″	14″	7″	42′ 2″	37′2″	50′1 ½″	46′11½″	4′10″	4′ 0″	13′6″	16′ 9″	11′0″	9′ 4″	5′ 6″	3′5″	20″	12,400	25,500
XIII	40″	16″	8″	43′ 1″	37′8″	52′2″	48′ 8½″	5′ 1″	4′ 8″	14′8″	17′ 9″	11′0″	10′ 0″	7′ 0″	3′8½″	22″	14,250	30,000
XIV	46″	18″	9″	43′ 9″	37′9″	53′1¾″	49′ 4″	5′ 9″	4′ 3″	15′0″	18′ 3″	12′6″	10′ 3″	7′ 9″	4′5½″	26½″	19,902	35,000
XV	48″	24″	12″	44′ 4″	38′2″	55′3¾″	51′ 0½″	7′ 0″	5′ 0″	15′6″	18′ 9″	14′0″	10′ 6″	8′ 6″	5′3″	2′8″	28,280	41,000
XVI	61″	26″	16″	45′ 1″	37′5¼″	58′2½″	58′ 2″	8′ 9″	5′ 8″	16′6″	21′ 7″	13′8½″	10′ 6″	8′11½″	5′6″	2′8″	36,950	46,500
XVII	66″	28″	18″	48′ 7″	40′0″	63′7¾″	58′ 2″	8′ 0″	5′10″	20′8″	23′10″	16′4″	12′10″	9′ 4″	6′1½″	3′2″	43,450	64,500
XVIII	72″	30″	18″	49′ 8″	40′6″	64′9½″	59′ 0½″	8′ 0″	6′ 0″	20′8″	25′ 8″	.....	.....	9′ 9″	6′4″	3′6″	46,100	68,000

NOTE.—Dimension *I* can vary to suit any ground level, but must not be less than dimension given.

For engine service the average conditions are 70° F. temperature of cooling water and 25″ vacuum, and under these conditions the maximum amounts of water which can be handled by the Weiss counter-current condenser, and the sizes of Weiss "dry" air pumps necessary are as follows:

TABLE 12

Number	Gallons Condensing Water per Minute	Size of Air Cylinder Dry-Vacuum Pump	Number	Gallons Condensing Water per Minute	Size of Air Cylinder Dry-Vacuum Pump
VIII	720	13½″ x 12″	XIV	3,900	24″ x 20″
IX	920	13½″ x 16″	XV	5,300	27″ x 24″
X	1,200	16 ″ x 16″	XVI	7,600	34″ x 24″
XI	1,600	18 ″ x 16″	XVII	9,300	34″ x 30″
XII	2,250	18 ″ x 20″	XVIII	10,500	34″ x 30″
XIII	3,000	22 ″ x 20″			

On the same conditions, viz., 70° water and 25″ vacuum, the water required is about 2 gallons per pound of steam to be condensed.

Fig. 44. Weiss Counter-Current Barometric Condenser (Table 11).

TABLE 13

BUFFALO BAROMETRIC CONDENSERS

A	B	C	D	E	F	G	H	I	J	K
No.	Standard Exhaust Inlet Flange	Exhaust Inlet Flange on Special Order May Be Made (See Note)	Size Tail Pipe Flange	Size Injection Inlet Flange	Size Relief Valve	Size Overflow Flange	Max. Capacity Injection Gals. Minute	Pounds Steam Condensed, Hour, 70 Deg. Injection, 26" Vacuum	Pounds Steam Condensed, Hour, 80 Deg. Injection, 26" Vacuum	Pounds Steam Condensed, Hour, 90 Deg. Injection, 26" Vacuum
8	8"	10"–12"	4"	3½"	6"	2"	350	5,500	4,500	3,000
10	10"	12"–14"	5"	4"	8"	2½"	500	8,000	6,500	4,500
12	12"	14"–16"	6"	5"	10"	3"	600	10,000	8,000	5,500
14	14"	16" 18"	7"	6"	12"	3"	750	12,500	10,000	7,000
16	16"	18"–20"	8"	7"	14"	4"	1,000	16,500	13,000	9,000
18	18"	20"–24"	8"	7"	16"	5"	1,250	21,000	16,000	11,500
20	20"	22"–24"	10"	8"	18"	5"	1,500	25,000	19,500	14,000
24	24"	26"–30"	12"	10"	20"	6"	2,000	33,000	26,000	18,500

F.—For steam capacity in column *I*.
H, I, J, K.—May be exceeded 10 per cent.
I, J, K.—Based on injection capacity stated in *H*.
Pump capacity, to supply injection, should be figured about 5-10 per cent above the quantity injection water estimated to be required for any given conditions.

TABLE 14

KOERTING EDUCTOR CONDENSERS (See Fig. 13)

DIMENSIONS AND RATING

Size Condenser Diam. Exhaust	Water Consumption per Minute, Maximum		Diam. Water Supply and Discharge Pipe	Approximate Horse-Power for Evaporation per Horsepower per Hour			Condenser				Total Approx. Shipping Weight
	Gals.	Cu. Ft.		20 Lb.	30 Lb.	40 Lb.	A	B	C	D	
1½	15	2	1	15	10	7.5	6¾	5¼	2⅝	2	150
2	26	3.5	1¼	26	17	13	9	6¾	3⅛	2½	200
2½	37	5	1½	38	25	19	10¾	7	3½	2¾	250
3	52	7	2	52	35	26	12½	8	4⅛	3¼	300
3½	75	10	2½	75	50	38	15	10	4½	3½	400
4	112	15	3	112	75	56	17½	11	5	4	500
5	165	22	3½	165	110	82	21½	13	5½	4½	600
6	240	32	4	240	160	120	25¾	15	6½	4¾	750
7	330	44	4½	330	220	165	30½	17	7¼	5	900
8	450	60	5	450	300	225	35½	19	8	5¼	1,400
9	600	80	6	600	400	300	41	21½	9	5¾	1,900
10	750	100	7	750	500	375	46¼	23½	10	6½	2,800
12	1,050	140	8	1,050	700	525	53	27	11	7	3,600
14	1,425	190	9	1,425	950	712	61¾	30	12	7⅝	5,000
16	1,800	240	10	1,800	1,200	900	70	34	14	8¼	6,500
18	2,400	320	12	2,400	1,600	1,200	80¼	38½	15	10	8,000
20	3,000	400	14	3,000	2,000	1,500	90	43	18	11¼	10,000
24	4,500	600	16	4,500	3,000	2,250	108	51	21	12½	14,000

NOTE.—The above table is based on a water consumption of 25 volumes at 60 degrees temperature. Where water of a higher temperature is to be used, there must be a correspondingly increased volume, or, in other words, a larger size condenser must be used. For a temperature of 70 degrees, increase should be about 20 per cent., and for a temperature of 80 degrees it should be about 50 per cent.

Referring to Fig. 42, it will be noted high vacuums are obtained with cooling water at 73½° temperature.

The difference in temperature between the discharged condensing water and the steam ranged from 4° to 10° during the test, and the hot well temperature ranged only 2° to 6°

below steam temperature. The high coefficient of heat transmission was 500 B.t.u. per sq. ft. per hour per degree difference in temperature with a load of 210,000 lb. of steam per hour.

The greatest load on the condenser was 210,000 lb. of steam per hour, but it is evident from the test that a load of 250,000 lb. of steam per hour would have carried with 28-in. vacuum and 70° water. This is equivalent to 10 lb. of steam per sq. ft. of surface, and under these conditions the coefficient of heat transmission would have been about 600.

The coefficients of heat transmission are calculated on the basis of 980 B.t.u. per pound of condensate, and by the logarithmic formula for heat transmission.

The test on the *Wheeler* dry-vacuum pump showed an average mechanical efficiency of 83.9 per cent, which is remarkably high. The test on the centrifugal circulating pump is covered by the chart of Fig. 43.

TABLE 15

SURFACE CONDENSER EQUIPMENT

(Assumed operating data.)
26" vacuum referred to 30" barometer.

Initial temperature of water t_1 = 70 deg. Fahr. Final temperature water t_2 = 110 deg. Fahr.
Temperature steam t_s = 125 deg. Fahr. Total head on circulating pump = 20 feet.

Ratio: Lb. water per lb. steam = 25.

Lb. Steam Condensed per Hour	Sq. Ft. Tube Surface	Outside Diam. Tubes	Size of Air Pump Single-Acting	Size of Centrifugal Pump	Size of Engine for Centrifugal Pump	Shipping Weight, Total Lb.	Price F. O. B. Factory
2,650	265	⅝"	3½"– 8" x 6"	3"	4" x 4"	4,550	$1,230.00
3,600	360	⅝"	3½"– 8" x 6"	4"	4" x 4"	5,450	1,375.00
4,600	465	⅝"	4 "–10" x 8"	4"	4" x 4"	7,100	1,749.00
6,200	620	⅝"	4 "–10" x 8"	4"	4" x 4"	8,000	1,929.00
7,700	775	⅝"	4 "–10" x 8"	5"	5" x 5"	9,800	2,296.00
9,000	900	⅝"	5 "–12" x 10"	5"	5" x 5"	12,500	2,584.00
14,000	1,410	¾"	6 "–14" x 10"	6"	5" x 5"	16,800	3,498.00
18,000	1,800	¾"	6 "–14" x 10"	8"	6" x 6"	20,800	4,081.00
22,700	2,275	¾"	7 "–16" x 10"	8"	6" x 6"	27,000	4,797.00
28,000	2,800	¾"	8 "–18" x 12"	10"	8" x 6"	34,000	5,699.00
35,000	3,500	¾"	8 "–18" x 12"	10"	8" x 6"	36,000	6,437.00
45,000	4,500	¾"	8 "–20" x 12"	12"	8" x 6"	40,500	7,921.00

TABLE 16

SURFACE CONDENSER EQUIPMENT

(Assumed operating data.)
28" vacuum referred to 30" barometer

Initial temperature cooling water t_1 = 70 deg. Fahr. Final temperature water t_2 = 85 deg. Fahr.
Temperature of exhaust steam t_s = 101 deg. Fahr. Total head on circulating pump = 20 feet.

Ratio: Lb. water per lb. of steam = 60.

Lb. Steam Condensed per Hour	Sq. Ft. Tube Surface	Outside Diam. Tubes	Size of Air Pump Single-Acting	Size of Centrifugal Pump	Size of Engine for Centrifugal Pump	Shipping Weight, Total Lb.	Price F. O. B. Factory
2,800	465	⅝"	4"–10" x 8"	4"	4" x 4"	7,100	$1,749.00
3,700	620	⅝"	4"–10" x 8"	5"	5" x 5"	9,200	2,129.00
4,600	775	⅝"	5"–12" x 10"	5"	5" x 5"	11,000	2,449.00
5,500	900	¾"	5"–12" x 10"	6"	5" x 5"	12,700	2,616.00
8,500	1,410	¾"	6"–14" x 10"	8"	6" x 6"	18,000	3,595.00
11,000	1,800	¾"	7"–16" x 10"	8"	6" x 6"	21,500	4,270.00
13,500	2,275	¾"	7"–16" x 10"	10"	8" x 8"	28,000	4,916.00
17,000	2,800	¾"	8"–18" x 12"	10"	8" x 8"	34,000	5,699.00
21,000	3,500	¾"	8"–20" x 12"	12"	8" x 8"	39,000	6,755.00
27,000	4,500	¾"	10"–24" x 12"	15"	8" x 8"	44,000	8,461.00
32,000	5,400	¾"	10"–24" x 12"	15"	10" x 10"	49,000	9,766.00
45,000	7,625	¾"	12"–30" x 14"	18"	10" x 10"	59,000	13,508.00

Ordinary Type Surface Condenser Installation Data. The type of surface condenser equipment ordinarily installed in the average medium-size plant consists of a (1) two-pass condenser;

(2) wet-vacuum pump, reciprocating type; (3) centrifugal circulating pump. The vacuum to be maintained being 26″ for reciprocating engine plants and 28″ for steam turbines.

FIG. 45. DIMENSION DRAWINGS OF EDWARDS AIR PUMP.

TABLE 17

PRINCIPAL DIMENSIONS OF EDWARDS AIR PUMP

All Dimensions in Inches

For higher vacuum as used in large central station work the condenser is of the *dry-tube* type and a dry-air pump is employed in addition to the condensate pump.

Tables 15 and 16 refer to installations for the medium-size plant and consist of a condenser, single wet-air pump, and a centrifugal circulating pump direct-connected to a steam engine.

(*H. A. Strauss.*) The ratio of $\frac{\text{steam condensed}}{\text{condenser surface}} = 10$ for 26″ vacuum and 5.5 to 6 for 28″ vacuum in the tables.

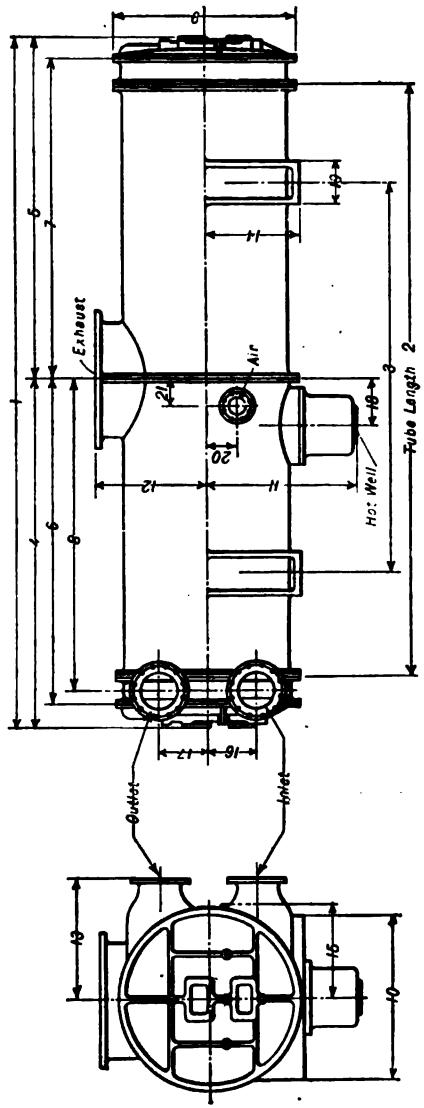

FIG. 46. DIMENSION DRAWINGS OF WESTINGHOUSE SURFACE CONDENSER.

TABLE 18

PRINCIPAL DIMENSIONS OF WESTINGHOUSE SURFACE CONDENSERS

All Dimensions in Inches

Size, Sq. Ft.	1	2	3	4	5	6	7	8	9	10	11	12	13	14	15	16	17	18	19	20	21
1,000	127½	98	58	63¾	63¾	57¾	57¾	53⅞	53	48	45½	31	33	27½	27	12	12	0	10	8	0
2,000	223½	194	126	111¾	111¾	105¾	105¾	101⅞	53	48	45½	32	33	27½	27	12	12	16	10	9	9
3,000	222½	194	126	111¾	111¾	105¾	105¾	101⅞	60	55	49½	36	39	31	31	16	16	32	14	12	9
4,000	224½	194	126	112¾	111¾	106¾	106¾	101⅞	69	63	53¾	41	44	35	35	18½	18½	34	14	12	9
5,000	228½	194	126	116	112½	106½	106	103¾	74	69	56¾	43	46	38	38	19	19	17	16	12	9
6,000	232½	194	126	117½	115	110	107½	103½	83	78	61¾	49	52	43	42	23	23	17	16	17	12
8,000	238½	194	126	120½	118	112½	110	104¾	94	86	66¾	56	58	48	47	24	24	17	16	15	12

Size	Exhaust				Circulating Water			Hot Well Outlet			Air Pump		
	Size	Flange Diam.	Bolt Circle	Bolts	Size	Flange Diam.	Bolt Circle	Bolts	Size	Flange Diam.	Stud Circle	Studs	Size	Flange Diam.	Stud Circle	Studs
1,000	24	31½	29¼	20–1	10	16	14¼	12–¾	3	7½	6	4–½	4	8	7½	4–½
2,000	33	41	38½	28–1¼	10	16	14¼	12–¾	3	7½	6	4–½	6	11	9½	8–½
3,000	40	49	46½	36–1¼	12	19	17	12–¾	5	10	8¼	8–½	6	11	9½	8–½
4,000	46	55¼	53½	40–1¼	14	21	18¾	12–1	5	10	8½	8–½	6	11	9½	8–½
5,000	..	....	....	.....	16	23½	21¼	16–1	5	10	8½	8–½	6	11	9½	8–½
6,000	..	....	....	.....	18	25	22¾	16–1¼	5	10	8½	8–½	8	13½	11¾	8–½
8,000	64	74	71	48–1¼	20	27½	25	20–1¼	7	12½	10¾	8–¾	8	13½	11¾	8–¾

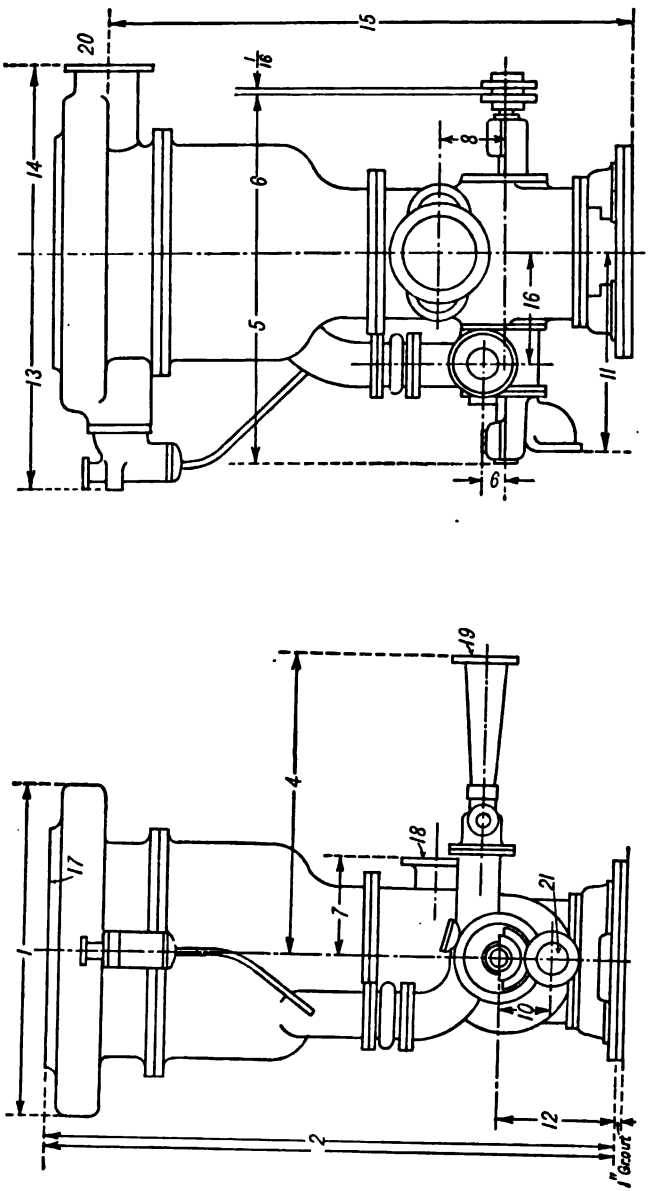

FIG. 47. DIMENSION DRAWINGS OF WESTINGHOUSE LEBLANC JET CONDENSERS (See Table 19).

TABLE 19

DIMENSIONS OF WESTINGHOUSE LEBLANC JET CONDENSERS (See Fig. 47)

SLOW SPEED—TYPE B—670 TO 750 R.P.M.

NOTE.—The above quantities of water are for the average standard condenser. The quantity of steam that will be condensed at 28" vacuum may be obtained by dividing the above quantities of water by 36, as 36 is the ratio obtaining for 70° water and 28" vacuum.

The water rates of the turbines, Fig. 2, Chapter on "Steam Turbines," vary from 28 lb. per kw.-hr. for the 300 kw. condensing unit to 18 lb. per kw.-hr. for the 2000 kw. condensing unit when operating at 28" vacuum.

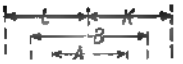

TABLE 21

WEIGHT OF WATER TO CONDENSE ONE POUND OF STEAM FOR MULTI-JET CONDENSERS

Vacuum In. Hg.	Initial Temperature Water Degs. F.						
	60	65	70	75	80	85	90
28½	80	95	..	..	..	..	..
28	52	60	70	82	100	..	..
27½	37	43	50	57	68	88	..
27	29	34	38	44	53	64	77
26½	24	28	32	37	45	54	68
26	21	24	28	33	39	47	55
25½	19	22	25	29	35	42	49
25	17½	21	23	27	33	39	45
24	17	19	22	25	30	35	41

Fig. 48. Multi-Jet Condenser. (See Table 20.)

TABLE 20

DIMENSION SCHEDULE OF MULTI-JET CONDENSERS

Size of steam inlet may be changed to suit conditions.

CHAPTER XIV

COOLING PONDS AND TOWERS

HUMIDITY

Definition. Humidity is the water vapor (steam or moisture) mixed with the air.

The maximum weight of vapor which a given enclosure will contain is dependent only upon the temperature (see Steam Tables) regardless of the presence or absence of any other vapor or gas. That is, the weight of vapor is exactly the same whether the air is present or not.

Dalton's Law. Each gas or vapor in a mixture, at a given temperature, contributes to the observed pressure the same amount that it would have exerted by itself at the same temperature, had no other gas or vapor been present. If p = the observed pressure of the mixture and p_1 p_2, p_3, etc., = the pressure of the gases or vapors corresponding to the observed temperature, then

$$p = p_1 + p_2 + p_3, \text{ etc.}$$

Saturated Air. Air is said to be *saturated* when it has mixed with it the maximum possible amount of vapor, the amount of which varies with the temperature. The vapor itself under this condition is also saturated (quality $x = 1$). If the air is not in a saturated condition, then the contained vapor is in a superheated state.

The *actual humidity* of the air, in meteorological work, is the number of grains (1 lb. = 7000 grains) or pounds of water vapor contained by one cu. ft. of a mixture of air and vapor at the observed temperature.

The *relative humidity* or *degree* of *humidity* is the percentage or ratio of the actual amount of moisture (grains or lb.) contained by one cu. ft. of the mixture to the amount which one cu. ft. of the mixture would hold at the same temperature, if saturated. The condition is stated as so many per cent relative humidity.

It simplifies calculations somewhat, if the actual humidity is considered as the *number of pounds of saturated vapor mixed with one pound of dry air, when saturated at a given temperature and pressure*, and the relative humidity, as the *weight of vapor actually mixed with one pound of air divided by the amount of saturated vapor mixed with one pound of air when saturated at the same temperature and pressure*, and expressed as a percentage.

Example. Let it be required to find the weight of vapor carried by one pound of air in a saturated mixture of air and vapor at a temperature of 60° F. and atmospheric pressure (14.7 lb. per sq. in. absolute at sea level).

If p_1 = Absolute partial pressure of the vapor lb. per sq. in. corresponding to the temperature. (See Steam Tables.)

p_2 = Absolute partial pressure of the air lb. per sq. in.

p = Total or barometric pressure = (14.7 lb. per sq. in. absolute at sea level, or 29.92 in. of mercury).

$p = p_1 + p_2 = 14.7$ at sea level.

From the steam tables (saturated water vapor) for a temperature of 60° F.,

$p_1 = .26$ and density = 0.00082 lb. per cu. ft.

$p_2 = 14.70 - 0.26 = 14.44$ partial air pressure.

From the relation $PV = MRT$, (Law for perfect gases).

Where R for air = 53.35, $T = 459.6 + 60$, $P = 144 \times 14.44$, $M = 1$ lb.,

$$V = \frac{53.35 \times 519.6}{144 \times 14.44} = 13.33 \text{ cu. ft. volume of the air.}$$

This also is the volume of the saturated vapor, as the air and vapor occupy the same amount of space. The weight of the saturated vapor is therefore:

13.33 × 0.00082 or 0.01093 lb. per lb. of the air in the mixture.

The weight of vapor per cu. ft. of the mixture is 0.01093/13.33 = 0.00082 lb. or 0.00082 × 7000 = 5.74 grains. The density of the mixture (1 lb. of air and its vapor) is 1.0109/13.33 or 0.0758 lb. and its specific volume is 1/0.0758 or 13.18 cu. ft.

Formula for Saturated Air. (100 per cent Relative Humidity.) The operation in the previous problem may be expressed by a formula as follows:

t = Temperature of the mixture degrees F.

T = Absolute temperature = $(t + 459.6)$.

P = Barometric pressure lb. per sq. ft.

P_s = Absolute vapor pressure lb. per sq. ft. corresponding to temperature t.

P_a = Absolute air pressure lb. per sq. ft.

$P = P_s + P_a$ and $P_a = P - P_s$.

V = Specific volume of air (cu. ft. per lb.) at temperature t.

V_s = Specific volume of saturated vapor at temperature t.

D_s = Density of saturated vapor at temperature t.

W = Weight of saturated vapor per pound of dry air in the mixture = $V D_s$.

Then $P_a V = RT = 53.35\ (t + 459.6)$.

$$V = \frac{53.35\ (t + 459.6)}{P_a} = \frac{53.35 + (t + 459.6)}{P - P_s}$$

and $$W = \frac{53.35\ (t + 459.6)\ D_s}{P - P_s}$$

or $$W = \frac{0.37\ (t + 459.6)\ D_s}{P - P_s}$$ when the pressures are stated in pounds per sq. inch.

If the weight is stated in grains and the pressures in inches of mercury,

1 lb. = 7000 grains, 1 in. mercury = 70.721 lb. per sq. ft.

Then $$G = \frac{5284\ (t + 459.6)\ D_s}{P_m - P_n}$$

in which G = grains moisture per lb. of dry air, P_m = barometric pressure inches of mercury and P_n = absolute pressure of saturated water vapor corresponding to the temperature, in inches of mercury. See Table 1 for "Properties of Saturated Air," also "Heat Exchange Diagram" (Fig. 4).

Dew Point Temperature. The temperature corresponding to saturation (100 per cent relative humidity) for a given weight of vapor is known as the *dew point.*

Any lowering of the temperature produces a contraction of volume and a partial condensation, the amount of vapor condensed being the difference between the original amount and the amount carried at saturation for the new or lower temperature. Air with any amount of vapor has a "dew point," as the temperature can always be lowered so that condensation must take place.

The maximum amount of saturated vapor which may be mixed with air in forming a *saturated mixture* may be calculated by making use of *Dalton's* law of partial vapor pressures.

The total pressure (barometric pressure) of a mixture of air and vapor is made up of the sum of the partial vapor pressure (vapor tension) and the partial air pressure.

Adiabatic Saturation of Dry Air. If absolutely dry air is passed through an insulated chamber containing a sponge, saturated with water, Fig. 1, it is observed that the temperature of the water will be lowered until a stationary temperature t' is reached, which is lower than the temperature t of the incoming air. Furthermore, the temperature of the leaving saturated air will be the same as the temperature of the water.

It is evident that an exchange of heat must take place between the air and water, as heat is neither supplied by or extracted from an external source. A heat transfer of this sort is said to be *adiabatic*.

The evaporation of the water takes place at the recorded temperature of the liquid t'.

Let W = weight of water evaporated per lb. of dry air passed through the apparatus, determined by actual measurement.

r' = latent heat of saturated vapor corresponding to temperature of liquid or t'.

Then $0.2411\ (t - t')$ = B.t.u. given up by one pound of air,

$r'\ W$ = heat required to evaporate the weight of moisture added to the air.

$r'\ W = 0.2411\ (t - t')$ which is the equation for the adiabatic saturation of dry air.

If the experiment were performed with dry air having an initial temperature $t = 75°$ the observed temperature of the water would be $t' = 46°$ and the weight of water evaporated per lb. of dry air, by measurement, $W = 0.00656$ lb. The latent heat for 46° is $r' = 1065.6$; then

FIG. 1. ADIABATIC SATURATION OF DRY AIR.

the heat required for evaporation is 1065.6×0.00656 or 6.99 B.t.u. which is seen to be exactly the same as the heat given up by the pound of dry air or $0.2411 \times (75 - 46)$ or 6.99 B.t.u.

Adiabatic Saturation of a Mixture of Air and Vapor. Assume (Fig. 3) a saturated mixture of 1 lb. of dry air plus W_1 lb. of vapor corresponding to temperature t_1 as obtained above corresponding to condition (2). If the temperature of this mixture is now raised to t corresponding to condition (3) the vapor is superheated.

The mixture will become adiabatically saturated at temperature t' corresponding to condition (4).

The heat given up by the superheated mixture of 1 lb. of air plus W_1 lb. of vapor in having its temperature lowered from t to t' is

$$C_{pa}\ (t - t') + C_{ps}\ W_1\ (t - t') \text{ B.t.u.}$$

C_{ps} = Sp. heat of vapor at constant pressure.

If W' is the weight of vapor in a saturated mixture at temperature t' then the weight of vapor added to saturate the mixture adiabatically is $(W' - W_1)$. And the heat required for evaporation is $r'\ (W' - W_1)$. As this is an adiabatic change, no heat supplied from an external source, the following equality exists:

$$r'\ (W' - W_1) = C_{pa}\ (t - t') + C_{ps}\ W_1\ (t - t').$$

The constant weight of vapor lines are plotted by adding the heat required to raise the temperature of the mixture from saturation t_1 to the required temperature t. Thus for condition (3) add $C_{pa}\ (t - t_1) + C_{ps}\ W_1\ (t - t_1)$ to the B.t.u. in 1 lb. of saturated air above 0° at temperature t_1, condition (2).

The Wet and Dry Bulb Psychrometer Principles Involved. The water [illegible] mixed with the air under various conditions of temperature and degree of [illegible] conveniently ascertained by observing the [illegible] actual temperature of the air.

The temperature of [illegible] bulb of which is placed [illegible].

If the spray water, through which air is [illegible] be simply recirculated and is supplied with heat from an external source [illegible] temperature constant and having an initial temperature higher than that [illegible] the temperature of the water will soon be lowered to that of the entering air [illegible] then not be able to heat the air further but will have its temperature lowered by any [illegible] that may take place. The temperature of the water being lowered by evaporation [illegible] water will lower the temperature of the air which in turn will give up some heat [illegible] by the reduction of its temperature. This heat exchange between the air and water continue until a stationary water temperature is reached at which point the heat [illegible] the air to the water will just balance the heat required for evaporation. As no heat [illegible] from an external source, it will be evident that this is an adiabatic change.

The air leaving is then in an adiabatic saturated condition, the temperature of that as recorded by the wet bulb thermometer as the action described is similar to [illegible] takes place when air is passed over the wet bulb of the wet bulb thermometer.

This furnishes a means for ascertaining the actual amount of moisture mixed with as given by the following method, wherein [illegible]

Fundamental Relations Involved in Determining the Actual Weight of Moisture per Pound of Dry Air.

t = temperature of the air degrees F. dry bulb.

t' = temperature of the air wet bulb. This is the temperature at which [illegible] becomes adiabatically saturated and at the same time [illegible]

$t - t'$ = wet bulb depression.

W = weight of moisture actually mixed with one lb. of dry air at temperature t.

$W' - W$ = weight of moisture per lb. dry air added in order to saturate the air.

r = latent heat of vaporization at temperature t.

$(W' - W)r'$ = heat necessary to be [illegible] $W' - W$ lb. water at temperature t'.

c_w = Sp. heat of water at constant pressure, average value 0.44.

c_a = Sp. heat of air at constant pressure, average value 0.24.

As this is an adiabatic change, no heat abstracted or added from an external source, heat required for evaporation being furnished by the air and its contained vapor in lowering temperature from t to t', then

$$W' - W = \frac{c_a(t - t')}{r' - c_w t'}$$

$$W = W' - \frac{c_a(t - t')}{r' - c_w t'}$$

The [illegible] W, W_s, T, being the weight of moisture per [illegible] when saturated with vapor at temperature t. The wet bulb temperature is the temperature corresponding to saturation of the mixture of W lb. of vapor per lb. of air in the mixture and [illegible] at constant pressure and temperature.

The determination of the actual weight of vapor in one pound of dry air is made by the use of a wet and dry bulb psychrometer.

This instrument (Fig. 2) consists of a wet bulb thermometer mounted adjacent to a dry bulb thermometer and so arranged that the air moving, which is about 15 inches per second, passes over both bulbs. In order to secure accurate and consistent results the instrument should be whirled from 120 to 200 times per min. For very accurate work *Carrie*

The Wet and Dry Bulb Psychrometer Principles Involved. The actual amount of moisture mixed with the air under various conditions of temperature and degrees of saturation is most conveniently ascertained by observing the *temperature at which evaporation takes place*, and the actual temperature of the air.

The temperature at which evaporation takes place is recorded by a thermometer, around the bulb of which is placed a moist cloth. This thermometer is termed the *wet bulb thermometer.*

If the spray water, through which air not initially saturated is passed, as in a humidifier, be simply recirculated and not supplied with heat from an external source in order to maintain its temperature constant, and having an initial temperature higher than that of the entering air, the temperature of the water will soon be lowered to that of the entering air. The water will then not be able to heat the air further, but will have its temperature lowered by any evaporation that may take place. The temperature of the water being lowered by evaporation, the cooled water will lower the temperature of the air, which, in turn, will give up some heat to the water by the reduction of its temperature. This heat exchange, between the air and water, will continue until a stationary water temperature (t') is reached, at which point the heat given up by the air to the water will just balance the heat required for evaporation. As no heat is supplied from an external source, it will be observed that this is an adiabatic change.

The air leaving is then in an adiabatically saturated condition, the temperature of which is that as recorded by the wet bulb thermometer, as the action described is similar to that which takes place when air is passed over the wet cloth of the wet bulb thermometer.

This furnishes a means for ascertaining the actual amount of moisture mixed with the air as given by the following method, devised by *W. H. Carrier:*

Psychrometric Method for the Determination of the Actual Weight of Moisture per Pound of Dry Air.

t = temperature of the air degrees F. (dry bulb).

t' = temperature of the air wet bulb. (This is the temperature at which the air becomes adiabatically saturated, *and not the dew-point temp.*)

$t - t'$ = wet bulb depression.

W = weight of moisture actually mixed with one lb. of dry air at temperature t.

$W' - W$ = weight of moisture per lb. dry air added in order to saturate the air.

r' = latent heat of vaporization at temperature t'.

$(W' - W)\,r'$ = heat necessary (B.t.u.) to evaporate $(W' - W)$ lb. water at temperature t'.

C_{ps} = Sp. heat of vapor at constant pressure (average value 0.44).

C_{pa} = Sp. heat of air at constant pressure (average value 0.24).

As this is an adiabatic change (no heat abstracted or added from an external source), the heat required for evaporation being supplied by the air and its contained vapor in lowering the temperature from t to t', then

$$(W' - W)\,r' = C_{ps}\,W\,(t - t') + C_{pa}\,(t - t')$$

$$W = \frac{r'\,W' - 0.24\,(t - t')}{r' + 0.44\,(t - t')}$$

The relative humidity is the ratio of W/W_x, W_x being the weight of moisture per lb. of air when saturated with vapor at temperature t. The *dew point* temperature is the temperature corresponding to saturated air containing W lb. of vapor per lb. of air in the mixture and should not be confounded with the *wet bulb temperature.*

The determination of the actual weight of vapor in one pound of dry air is most conveniently made by the use of *the wet and dry bulb sling psychrometer.*

This instrument (Fig. 2) consists of a wet bulb thermometer mounted adjacent to a dry bulb thermometer and so arranged that the entire mounting, which is about 15 inches in length, may be swung about a handle. In order to secure accurate and consistent results the instrument should be revolved from 150 to 225 times per min. For very accurate work *Carrier* states

PSYCHROMETRIC CHART AND HEAT EXCHANGE

L. A. HARDING

Examples in the Use of Chart and Diagram. Required the relative humidity fo wet-bulb reading of 66° F.

The intersection of a horizontal line through 66° F. on the ***saturation curve***, and the the base line gives, approximately, 37 per cent for the relative humidity. The ***dew p*** the corresponding ***constant weight vapor line*** to its intersection with the ***saturation curv*** tion. The actual weight of vapor per pound of dry air may be read direct from the sa perature or 55° F. and is 0.009 pound.

Humidifying. Assuming a room temperature of 70° F. and 40 per cent relative h outside temperature is 0° F. Locate the intersection of the vertical 70° F. dry-bulb relative humidity curve, follow the ***constant weight vapor line***, passing through the inte saturation curve or 45° F. corresponding to 0.0063 lb. vapor per lb. of dry air. This is saturated air must leave the washer, and is the temperature for which the thermosta must be set.

The heat per pound of dry air required for the tempering coil and water heater is and is 17.5 B.t.u. to raise the temperature of the incoming air from 0° F. to 45° F. The additional heat required for the reheater will depend upon the final temperature d

Air Cooling. Entering air 89° F. dry bulb and a relative humidity of 50 per cent corresponding to a wet-bulb temperature of 74° F., wet-bulb depression 89 − 74 or 15 degrees. If the ***humidifying efficiency*** of a washer is 60 per cent, then the temperature drop will be 15 × 0.60 or 9 degrees. Temperature of leaving air 89 − 9 or 80 degrees. The wet-bulb temperature remains constant.

Drying. Outside air temperature 80° F. and 40 per cent relative humidity. Heater to raise the temperature to 110° F., at which temperature it is introduced into the drier. Air to leave the drier, 70 per cent saturated. From the intersection of the vertical 80° F. dry-bulb temperature line and the 40 per cent relative humidity curve, follow the diagonal ***equal weight of vapor line*** until it intersects the vertical 110° F. line corresponding to 15 per cent relative humidity. Read horizontally to the left to the intersection with the 70 per cent curve. The corresponding dry-bulb temperature is 81° F., which is the required temperature

Dry Bulb Temper

Fig. 4

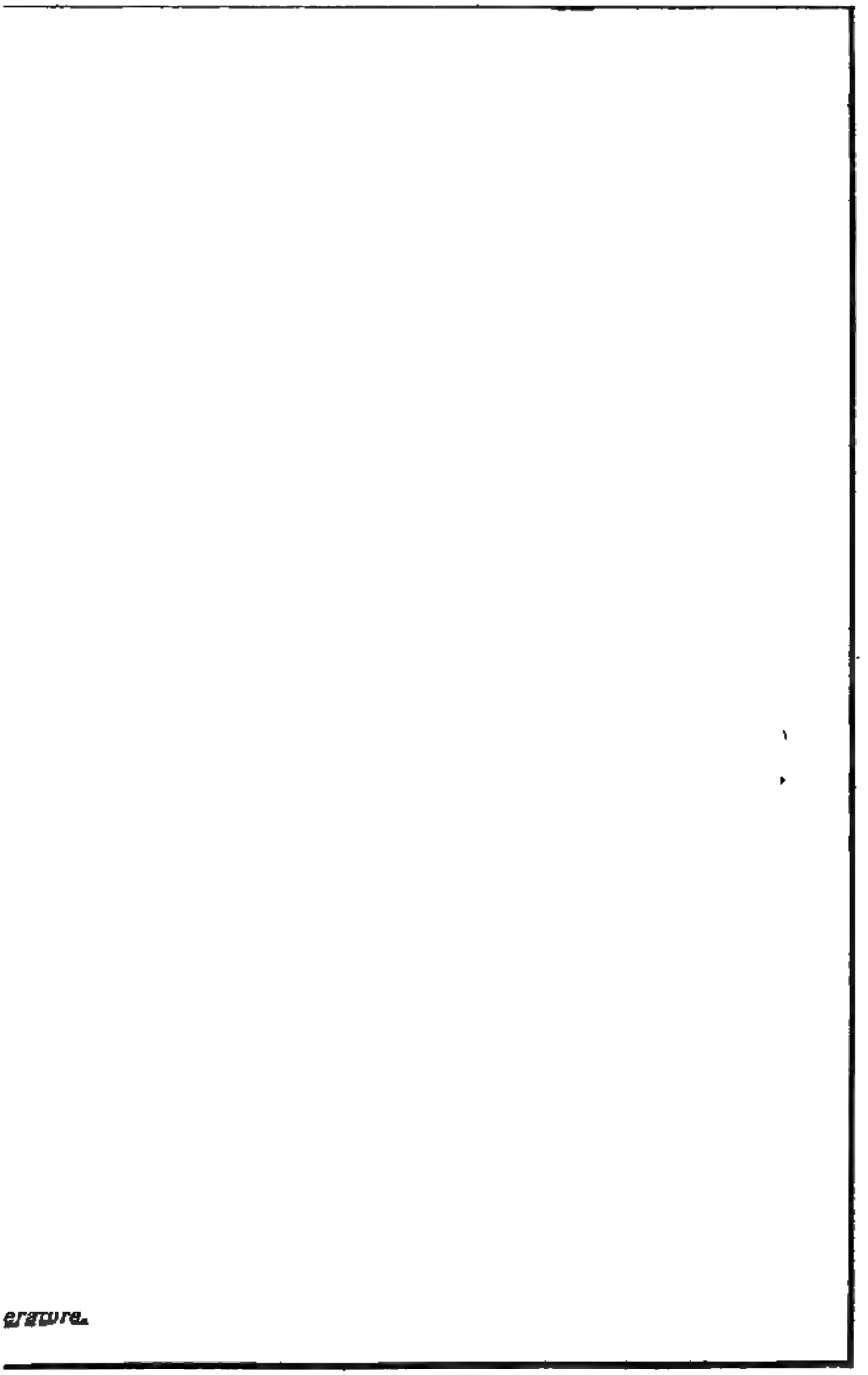

erature.

that a negative correction for radiation of approximately 1.6 per cent of the wet bulb depression should be made to obtain the true depression.

A more refined type of apparatus, known as the *Assmann Aspirating Psychrometer*, makes use of a small fan to draw air over the thermometer bulbs at a constant rate, and in addition each bulb is carefully shielded to protect it from radiation.

Heat Exchange Diagram and Psychrometric Chart. The heat exchange diagram (Fig. 4) is plotted using temperatures as abscissæ and B.t.u. as ordinates. The heat required to raise the temperature of 1 lb. of dry air from 0° to any temperature t is equal to $C_{pa}\,t$ (C_{pa} = specific heat of air at constant pressure = 0.2411). The *dry air* line having been drawn as shown, the *saturation* curve is plotted by adding the heat required, $r\,W$, to evaporate the weight of vapor mixed with saturated air, as may be calculated, to that of one pound of dry air above 0°, for the same temperature. The heat required to raise the temperature of one pound of dry air from zero to the required temperature and evaporate the weight of moisture added to saturate the air is known as the heat content of saturated air and is expressed by the formula $C_{pa}\,t + r\,W$.

To find the per cent relative humidity when the wet bulb reading is 66° F. and dry bulb reading is 84° F. The intersection of the horizontal line through 66° F. on the saturation curve and the vertical through 84° F. dry bulb temperature gives approximately 37 per cent for the relative humidity.

The *dew point* temperature for the above condition is found by following the diagonal *constant weight vapor line* to its intersection with the saturation curve giving 55° F+.

The actual weight of vapor mixed with one pound dry air is therefore 0.37 × 0.0252 (weight of vapor per lb. of dry air when saturated at 84° F.) or 0.009. This may be read direct on the saturation curve for 55° F. The *dew point* temperature should not be confounded with the temperature of adiabatic saturation which is always recorded by the wet bulb thermometer and in this case is 66° F.

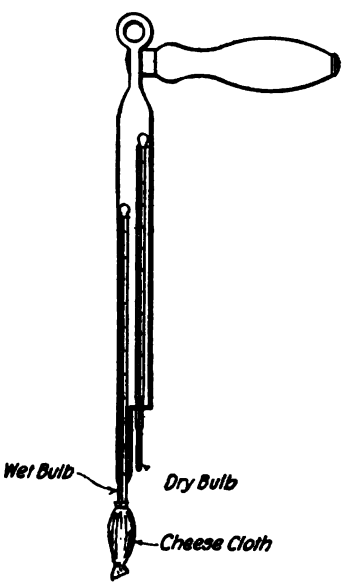

Sling Psychrometer
Fig. 2

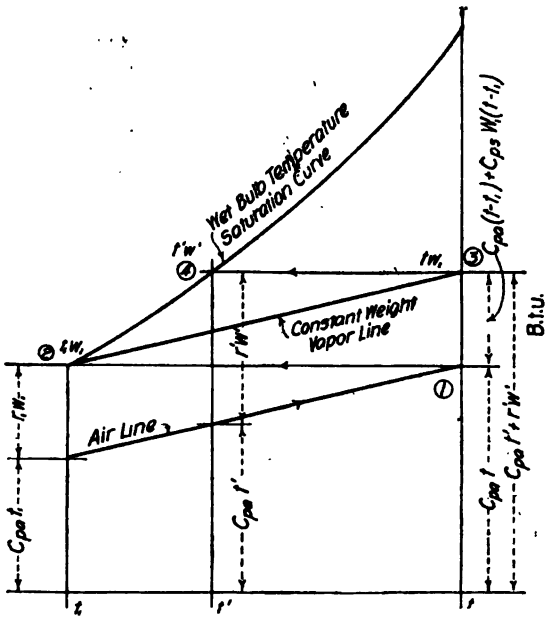

Dry Bulb Temperature
Fig. 3

TABLE 1
MIXTURES OF AIR AND SATURATED WATER VAPOR
G. A. GOODENOUGH

Temp., °F.	* Pressure of saturated vapor		Weight of saturated vapor				Volume in cu. ft.		Heat content in B.t.u. of 1 lb of dry air above 0° F.	Latent heat of vapor, B.t.u.	† Heat content in B.t.u. of 1 lb. of dry air with vapor to saturate it
			per cu. ft.		per lb. of dry air		of 1 lb. of dry air	of 1 lb. of dry air + vapor to saturate it			
	In. of Hg.	Lb. per sq. in.	Pounds	Grains	Pounds	Grains					
0	0.0375	0.0184	0.0000674	0.472	0.000781	5.47	11.58	11.59	0.0	0.964	0.964
2	.0417	.0204	.0000746	.522	.000869	6.08	11.63	11.65	0.482	1.071	1.553
4	.0462	.0227	.0000823	.576	.000963	6.74	11.68	11.70	0.964	1.186	2.150
6	.0512	.0252	.0000909	.636	.001067	7.47	11.73	11.75	1.446	1.313	2.759
8	.0567	.0279	.0001001	.701	.001183	8.28	11.78	11.80	1.928	1.455	3.383
10	0.0628	0.0308	0.0001103	0.772	0.001309	9.16	11.83	11.86	2.411	1.608	4.019
12	.0694	.0341	.000121	.850	.001447	10.13	11.88	11.91	2.893	1.776	4.669
14	.0766	.0376	.000134	.935	.001599	11.19	11.94	11.97	3.375	1.961	5.336
16	.0846	.0415	.000147	1.028	.001764	12.35	11.99	12.02	3.858	2.162	6.020
18	.0932	.0458	.000161	1.128	.001946	13.62	12.04	12.08	4.340	2.383	6.723
20	0.1027	0.0504	0.000177	1.237	0.002144	15.01	12.09	12.13	4.823	2.623	7.446
22	.1130	.0555	.000194	1.356	.002360	16.52	12.14	12.19	5.305	2.885	8.190
24	.1242	.0610	.000212	1.485	.002596	18.17	12.19	12.24	5.787	3.170	8.957
26	.1365	.0670	.000232	1.625	.002854	19.98	12.24	12.30	6.270	3.482	9.752
28	.1499	.0736	.000254	1.776	.003134	21.94	12.29	12.35	6.752	3.821	10.573
30	0.1646	0.0809	0.000278	1.943	0.003444	24.11	12.34	12.41	7.234	4.195	11.429
32	.1806	.0887	.000303	2.124	.003782	26.47	12.39	12.47	7.716	4.058	11.783
33	.1880	.0923	.000315	2.206	.003938	27.57	12.41	12.49	7.96	4.22	12.18
34	.1957	.0961	.000327	2.292	.004100	28.70	12.44	12.52	8.20	4.40	12.60
35	0.2036	0.1000	0.000340	2.380	0.004268	29.88	12.47	12.55	8.44	4.57	13.02
36	.2119	.1041	.000353	2.471	.004442	31.09	12.49	12.58	8.68	4.76	13.44
37	.2204	.1083	.000367	2.566	.004622	32.35	12.52	12.61	8.93	4.95	13.87
38	.2292	.1126	.000381	2.663	.004809	33.66	12.54	12.64	9.17	5.14	14.31
39	.2384	.1171	.000395	2.764	.005002	35.01	12.57	12.67	9.41	5.35	14.76
40	0.2478	0.1217	0.000410	2.868	0.005202	36.41	12.59	12.70	9.65	5.56	15.21
41	.2576	.1266	.000425	2.976	.005410	37.87	12.62	12.73	9.89	5.78	15.67
42	.2678	.1315	.000441	3.087	.005625	39.38	12.64	12.76	10.14	6.01	16.14
43	.2783	.1367	.000457	3.201	.005848	40.93	12.67	12.79	10.38	6.24	16.62
44	.2891	.1420	.000474	3.319	.006078	42.55	12.69	12.82	10.62	6.48	17.10

* Below 32° F. the pressure of saturated vapor in contact with ice is given. † Values in this column do not include the heat of the liquid. Below 32° F. the heat of sublimation of ice is included.
Table based on 29.92" barometric pressure.

TABLE 1—(*Continued*)
MIXTURES OF AIR AND SATURATED WATER VAPOR
G. A. GOODENOUGH

Temp., °F.	Pressure of saturated vapor		Weight of saturated vapor				Volume in cu. ft.		Heat content in B.t.u. of 1 lb of dry air above 0° F.	Latent heat of vapor, B.t.u.	*Heat content in B.t.u. of 1 lb. of dry air with vapor to saturate it
			per cu. ft.		per lb. of dry air		of 1 lb. of dry air	of 1 lb. of dry air + vapor to saturate it			
	In. of Hg.	Lb. per sq. in.	Pounds	Grains	Pounds	Grains					
45	0.3003	0.1475	0.000492	3.442	0.00632	44.21	12.72	12.85	10.86	6.73	17.59
46	.3120	.1532	.000510	3.568	.00656	45.94	12.74	12.88	11.10	6.99	18.09
47	.3240	.1591	.000528	3.698	.00682	47.73	12.77	12.91	11.34	7.26	18.60
48	.3364	.1652	.000547	3.832	.00708	49.58	12.79	12.94	11.58	7.54	19.12
49	.3492	.1715	.000567	3.970	.00736	51.49	12.82	12.97	11.83	7.83	19.65
50	0.3624	0.1780	0.000588	4.113	0.00764	53.47	12.84	13.00	12.07	8.12	20.19
51	.3761	.1848	.000609	4.260	.00793	55.52	12.87	13.03	12.31	8.43	20.74
52	.3903	.1917	.000630	4.411	.00823	57.64	12.89	13.07	12.55	8.75	21.30
53	.4049	.1989	.000653	4.568	.00855	59.83	12.92	13.10	12.79	9.08	21.87
54	.4200	.2063	.000676	4.729	.00887	62.09	12.95	13.13	13.03	9.41	22.45
55	0.4356	0.2140	0.000699	4.895	0.00920	64.43	12.97	13.16	13.28	9.76	23.04
56	.4517	.2219	.000724	5.066	.00955	66.85	13.00	13.20	13.52	10.13	23.64
57	.4684	.2300	.000749	5.242	.00991	69.35	13.02	13.23	13.76	10.50	24.25
58	.4855	.2384	.000775	5.424	.01028	71.93	13.05	13.26	14.00	10.89	24.88
59	.5032	.2471	.000802	5.611	.01066	74.60	13.07	13.30	14.24	11.28	25.52
60	0.5214	0.2561	0.000829	5.804	0.01105	77.3	13.10	13.33	14.48	11.69	26.18
61	.5403	.2654	.000858	6.003	.01146	80.2	13.12	13.36	14.72	12.12	26.84
62	.5597	.2749	.000887	6.208	.01188	83.2	13.15	13.40	14.97	12.56	27.52
63	.5798	.2848	.000917	6.418	.01231	86.2	13.17	13.43	15.21	13.01	28.22
64	.6005	.2949	.000948	6.633	.01276	89.3	13.20	13.47	15.45	13.48	28.93
65	0.6218	0.3054	0.000979	6.855	0.01323	92.6	13.22	13.50	15.69	13.96	29.65
66	.6438	.3162	.001012	7.084	.01370	95.9	13.25	13.54	15.93	14.46	30.39
67	.6664	.3273	.001046	7.320	.01420	99.4	13.27	13.58	16.18	14.97	31.15
68	.6898	.3388	.001080	7.563	.01471	103.0	13.30	13.61	16.42	15.50	31.92
69	.7139	.3506	.001116	7.813	.01524	106.6	13.32	13.65	16.66	16.05	32.71
70	0.7386	0.3628	0.001153	8.069	0.01578	110.5	13.35	13.69	16.90	16.61	33.51
71	.7642	.3754	.001190	8.332	.01634	114.4	13.38	13.73	17.14	17.19	34.33
72	.7906	.3883	.001229	8.603	.01692	118.4	13.40	13.76	17.38	17.79	35.17
73	.8177	.4016	.001269	8.882	.01751	122.6	13.43	13.80	17.63	18.41	36.03
74	.8456	.4153	.001310	9.168	.01813	126.9	13.45	13.84	17.87	19.05	36.91

* Values in this column do not include the heat of the liquid.

TABLE 1—(*Continued*)

MIXTURES OF AIR AND SATURATED WATER VAPOR

G. A. GOODENOUGH

Temp., ° F.	Pressure of saturated vapor		Weight of saturated vapor				Volume in cu. ft.		Heat content in B.t.u. of 1 lb of dry air above 0° F.	Latent heat of vapor, B.t.u.	* Heat content in B.t.u. of 1 lb. of dry air with vapor to saturate it
			per cu. ft.		per lb. of dry air		of 1 lb. of dry air.	of 1 lb. of dry air + vapor to saturate it			
	In. of Hg.	Lb. per sq. in.	Pounds	Grains	Pounds	Grains					
75	0.8744	0.4295	0.001352	9.46	0.01877	131.4	13.48	13.88	18.11	19.71	37.81
76	.9040	.4440	.001395	9.76	.01942	135.9	13.50	13.92	18.35	20.38	38.73
77	.9345	.4590	.001439	10.07	.02010	140.7	13.53	13.96	18.59	21.08	39.67
78	.9658	.4744	.001485	10.39	.02080	145.6	13.55	14.00	18.84	21.80	40.64
79	.9981	.4903	.001532	10.72	.02152	150.6	13.58	14.05	19.08	22.55	41.63
80	1.0314	0.5066	0.001580	11.06	0.02226	155.8	13.60	14.09	19.32	23.31	42.64
81	1.0656	.5234	.001629	11.40	.02303	161.2	13.63	14.13	19.56	24.11	43.67
82	1.1008	.5406	.001680	11.76	.02381	166.7	13.65	14.17	19.80	24.92	44.72
83	1.1370	.5584	.001732	12.12	.02463	172.4	13.68	14.22	20.04	25.76	45.80
84	1.174	.5767	.001786	12.50	.02547	178.3	13.70	14.26	20.29	26.62	46.91
85	1.212	0.5955	0.001841	12.89	0.02634	184.4	13.73	14.31	20.53	27.51	48.04
86	1.251	.6148	.001897	13.28	.02723	190.6	13.75	14.35	20.77	28.43	49.20
87	1.292	.6347	.001955	13.68	.02815	197.0	13.78	14.40	21.01	29.38	50.39
88	1.334	.6551	.002014	14.10	.02910	203.7	13.80	14.45	21.25	30.35	51.61
89	1.377	.6761	.002075	14.53	.03008	210.6	13.83	14.50	21.50	31.36	52.86
90	1.421	0.6977	0.002137	14.96	0.03109	217.6	13.86	14.55	21.74	32.39	54.13
91	1.466	.7200	.002201	15.41	.03213	224.9	13.88	14.60	21.98	33.46	55.44
92	1.512	.7427	.002267	15.87	.03320	232.4	13.91	14.65	22.22	34.59	56.78
93	1.560	.7660	.002334	16.34	.03430	240.1	13.93	14.70	22.46	35.69	58.15
94	1.609	.7901	.002403	16.82	.03544	247.1	13.96	14.75	22.71	36.86	59.56
95	1.659	0.8148	0.002474	17.32	0.03662	256.3	13.98	14.80	22.95	38.06	61.01
96	1.710	.8401	.002546	17.82	.03783	264.8	14.01	14.86	23.19	39.30	62.48
97	1.763	.8662	.002621	18.35	.03908	273.6	14.03	14.91	23.43	40.57	64.00
98	1.818	.8929	.002697	18.88	.04036	282.5	14.06	14.97	23.67	41.88	65.55
99	1.874	.9204	.002775	19.42	.04169	291.8	14.08	15.02	23.91	43.24	67.15
100	1.931	0.9486	0.002855	19.98	0.04305	301.3	14.11	15.08	24.16	44.63	68.79
101	1.990	0.9775	.002937	20.56	.04446	311.2	14.14	15.14	24.40	46.07	70.47
102	2.051	1.0072	.003021	21.15	.04591	321.4	14.16	15.20	24.64	47.54	72.18
103	2.113	1.0376	.003107	21.75	.04741	331.9	14.19	15.26	24.88	49.07	73.95
104	2.176	1.0689	.003195	22.36	.04895	342.7	14.21	15.33	25.13	50.64	75.77

* Values in this column do not include the heat of the liquid.

TABLE 1—(*Continued*)
MIXTURES OF AIR AND SATURATED WATER VAPOR
G. A. GOODENOUGH

Temp., °F.	Pressure of saturated vapor		Weight of saturated vapor				Volume in cu. ft.		Heat content in B.t.u. of 1 lb of dry air above 0° F.	Latent heat of vapor, B.t.u.	[2] Heat content in B.t.u. of 1 lb. of dry air with vapor to saturate it
			per cu. ft.		per lb. of dry air		of 1 lb. of dry air	of 1 lb. of dry air + vapor to saturate it			
	In. of Hg.	Lb. per sq. in.	Pounds	Grains	Pounds	Grains					
105	2.241	1.1010	0.003285	22.99	0.0505	354	14.24	15.39	25.37	52.26	77.63
106	2.308	1.134	.003377	23.64	.0522	365	14.26	15.46	25.61	53.92	79.53
107	2.377	1.168	.003472	24.30	.0539	377	14.29	15.52	25.85	55.64	81.49
108	2.448	1.202	.003568	24.98	.0556	389	14.31	15.59	26.09	57.41	83.50
109	2.520	1.238	.003667	25.67	.0574	402	14.34	15.66	26.33	59.23	85.57
110	2.594	1.274	0.003769	26.38	0.0593	415	14.36	15.73	26.58	61.11	87.69
111	2.670	1.311	.003873	27.11	.0612	428	14.39	15.80	26.82	63.04	89.86
112	2.748	1.350	.003979	27.85	.0631	442	14.41	15.87	27.06	65.04	92.10
113	2.827	1.389	.004087	28.61	.0652	456	14.44	15.95	27.30	67.10	94.40
114	2.909	1.429	.004198	29.39	.0673	471	14.46	16.02	27.55	69.22	96.77
115	2.993	1.470	0.004312	30.18	0.0694	486	14.49	16.10	27.79	71.40	99.10
116	3.079	1.512	.004428	31.00	.0717	502	14.52	16.18	28.03	73.65	101.68
117	3.167	1.555	.004547	31.83	.0739	518	14.54	16.26	28.27	75.97	104.24
118	3.257	1.600	.004669	32.68	.0763	534	14.57	16.35	28.51	78.36	106.87
119	3.349	1.645	.004793	33.55	.0788	551	14.59	16.43	28.76	80.80	109.56
120	3.444	1.692	0.004920	34.44	0.0813	569	14.62	16.52	29.00	83.37	112.37
125	3.952	1.941	.005599	39.19	.0953	667	14.75	16.99	30.21	97.33	127.54
130	4.523	2.221	.006356	44.49	.1114	780	14.88	17.53	31.42	113.64	145.06
135	5.163	2.536	.007197	50.38	.1305	913	15.00	18.13	32.63	132.71	165.34
140	5.878	2.887	.008130	56.91	.1532	1072	15.13	18.84	33.85	155.37	189.22
145	6.677	3.280	0.00916	64.1	0.1800	1260	15.26	19.64	35.06	182.05	217.1
150	7.566	3.716	.01030	72.1	.2122	1485	15.39	20.60	36.27	214.03	250.3
155	8.554	4.201	.01156	80.9	.2511	1758	15.52	21.73	37.48	252.61	290.1
160	9.649	4.739	.01294	90.6	.2987	2091	15.64	23.09	38.69	299.55	338.2
165	10.860	5.334	.01445	101.1	.3577	2504	15.77	24.75	39.91	357.75	397.7
170	12.20	5.990	0.01611	112.8	0.4324	....	15.90	26.84	41.12	431.2	472.3
175	13.67	6.71	.01793	125.5	.5290	....	16.03	29.51	42.33	526.0	568.3
180	15.29	7.51	.01991	139.4	.6577	....	16.16	33.04	43.55	651.9	695.5
185	17.07	8.38	.02206	154.4	.8359	....	16.28	37.89	44.76	826.1	870.9
190	19.01	9.34	.02441	170.9	1.0985	....	16.41	45.00	45.97	1082.3	1128.3
200	23.46	11.53	0.02972	208.0	2.2953	....	16.67	77.24	48.40	2247.5	2296

[2] Values in this column do not include the heat of the liquid.

CONDITIONS REQUIRING COOLING PONDS OR TOWERS

In localities where the water supply is limited or is only obtainable at a comparatively high cost, the cooling water required for steam and ammonia condensers, gas and oil engines may be continuously recirculated when it is feasible to construct a cooling pond or install a cooling tower. The cooling effect is obtained by the evaporation in the air of a small portion of the water, 3 to 7 per cent of the amount circulated, which represents the total amount of fresh make-up water to be supplied.

On account of the comparatively large evaporating surface necessary cooling ponds *without sprays* are not often used.

On account of the excessive amount of water to be pumped and initial cost of construction, neither cooling ponds nor cooling towers are ordinarily installed for steam condenser work requiring a vacuum in excess of 26 in. hg., the ordinary demand being between 23 and 25 in. referred to a 30-in. barometer.

TABLE 2

AVERAGE ATMOSPHERIC CONDITIONS FOR VARIOUS CITIES DURING THE SUMMER MONTHS

City	Mean Relative Humidity Per Cent			Mean Temperature Dry Bulb		
	June	July	Aug.	June	July	Aug.
Boston	71.6	71.4	75.4	65.8	71.3	68.9
New York	72.5	73.6	75.4	68.5	73.5	72.2
Philadelphia	67.9	69.8	71.9	71.2	75.8	73.8
Washington	72.6	74.4	76.8	72.7	76.8	74.5
Charleston	78.7	79.8	81.4	78.4	81.3	80.3
Jacksonville, Fla	78.8	79.7	81.4	79.0	80.9	80.1
New Orleans	77.2	77.7	78.9	79.6	81.3	81.0
Galveston	79.6	77.4	78.4	80.9	83.0	82.6
Pittsburg	69.7	67.8	69.0	71.1	74.6	72.5
Cleveland	70.6	68.2	70.5	67.9	72.5	70.4
Chicago	72.9	69.5	71.4	66.3	72.2	71.2
St. Paul	67.9	66.0	69.6	67.4	72.1	69.5
St. Louis	68.2	66.1	67.5	75.1	79.1	77.2
Kansas City	70.0	68.4	69.5	73.0	77.6	75.8
Denver	45.8	49.0	44.0	66.4	71.8	70.4
Portland, Ore	69.0	64.3	67.3	61.3	66.3	65.9
San Francisco	80.1	84.4	85.8	57.0	57.3	58.0
Los Angeles	74.7	75.6	75.8	64.5	67.4	68.6

COOLING PONDS

Cooling Ponds without Spray Nozzles. *Box*, in his treatise on "Heat," gives the following formula for the rate of evaporation from a pond or reservoir in still air:

$G = (240 + 3.7t)\ (P_s - P)$ in which

G = grains moisture evaporated per sq. ft. per hour (7000 grains = 1 lb.).

t = average temperature of the water, deg. F.

P_s = pressure of saturated vapor in inches of mercury corresponding to the temperature t.

P = the actual vapor pressure of the air in inches of mercury.

Actual tests of cooling ponds under average summer conditions, *without sprays*, have shown that approximately 4 B.t.u. are dissipated per sq. ft. per hour per degree difference in temperature between the air and the average temperature of the water in the pond. During the winter months the heat loss is reduced to approximately 2 B.t.u.

The suction well should be provided with removable screens with submerged openings in order to prevent the hot surface water from short circuiting. The inlet pipe should be submerged at least 6 ft. below the surface, as otherwise air is liable to be drawn into the circulating water, which is detrimental to the vacuum in the jet type condenser.

TABLE 3

AVERAGE TEMPERATURE AND HUMIDITY FOR VARIOUS CITIES IN THE UNITED STATES

City	Mean Values for January			Mean Values for July			
	Humidity Per Cent	Temp. Deg. F.	Lb. Water per 1000 Cu. Ft. Air	Humidity Per Cent	Temp. Deg. F.	Lb. Water per 1000 Cu. Ft. Air	Temp. Cooled Water* Deg. F.
Albany, N. Y.	80.4	23.0	.....	71.9	73.0	1.01	76
Atlanta, Ga.	76.4	42.5	0.344	75.6	78.5	1.25	81
Baltimore, Md.	71.6	34.0	.....	69.6	77.5	1.13	79
Bismarck, N. D.	73.9	6.5	.....	65.3	70.0	0.80	70
Boston, Mass.	72.1	27.0	.....	71.4	72.0	0.95	77
Chicago, Ill.	82.1	23.5	.....	69.5	72.5	0.96	76
Cleveland, O.	....	....	.....	68.2	72.5	0.94	73
Denver, Colo.	52.6	29.0	.....	40.0	72.0	0.65	74
El Paso, Tex.	47.3	44.0	0.350	45.0	82.0	0.86	61
Galveston, Tex.	83.9	53.5	0.590	77.4	84.5	1.60	80
Los Angeles, Cal.	67.4	54.0	0.800	75.6	71.0	0.96	65
Milwaukee, Wis.	78.4	20.0	.....	70.6	70.0	0.88	67
New Orleans, La.	78.9	54.0	0.560	77.7	82.5	1.57	78
New York, N. Y.	75.2	30.5	.....	73.6	74.5	1.09	71
Portland, Me.	75.3	22.5	.....	76.4	68.5	0.88	67
Portland, Ore.	85.4	38.5	0.330	64.3	67.0	0.07	62
St. Louis, Mo.	74.3	32.0	.....	66.1	79.5	1.15	74
St. Paul, Minn.	80.0	11.0	.....	66.0	72.5	0.90	67
San Francisco, Cal.	79.7	50.0	0.470	84.4	59.0	0.72	58
Wichita, Kan.	73.8	32.5	.....	66.5	79.0	1.14	73

* Probable temperature to which water may be cooled by a well-proportioned cooling system.

There is nothing gained, from the standpoint of cooling effect, in constructing a cooling pond more than 3 ft. in depth.

Example. Required the area of a cooling pond without sprays for a 500 i.hp. condensing plant having a daily load factor of 40 per cent, the steam consumption averaging 15 lb. per i.hp.-hour.

Assuming that the average summer temperature for the locality is 75° and a relative humidity of 60 per cent, initial temperature of the water from the hot well 110°, the water is to be cooled down to 80° and returned to a barometric or jet condenser.

Approximately 32 lb. of injection water will be required per lb. of steam condensed to maintain a 26-in. vacuum with a 15-deg. "terminal difference."

$$15 \times 32 \times 500 \times 0.40 = 96{,}000 \text{ lb. condensing water per hour.}$$

Weight of steam condensed per hour is:

$$15 \times 500 \times 0.40 = 3000 \text{ lb.}$$

Then $96{,}000 + 3000 = 99{,}000$ lb. entering cooling pond per hour at a temperature of 110° F.

Solution. Average temperature of water $t = \frac{110 + 80}{2} = 95°$ (approx.); P_s corresponding to 95° = 1.659 in. hg.; P corresponding to 75° and a relative humidity of 60 per cent = $0.8744 \times 0.60 = 0.525$ in. hg. $G = (240 + 3.7 \times 95)\ (1.659 - 0.525) = 671$ grains evaporated per sq. ft. per hour or approximately, 0.10 lb.

To evaporate 1 lb. of water from and at 95° requires the addition of 1039 B.t.u. (latent heat) Therefore the evaporation of 0.10 lb. will remove from the water $1039 \times 0.10 = 104$ B.t.u. per sq. ft. per hour. This corresponds to $\frac{104}{95 - 75}$ or 5.2 B.t.u.* dissipated per sq. ft. per hour

* This is greater than is generally found in practice.

per degree difference between the average temperature of the water and the surrounding air. The heat to be abstracted from the water is:

$$99{,}000 \times (110 - 80) = 2{,}970{,}000 \text{ B.t.u. per hour.}$$

$$\text{Area of pond for 40 per cent load factor} = \frac{2{,}970{,}000}{104} = 28{,}550 \text{ sq. ft.}$$

$$\text{Area of pond for 100 per cent load factor} = \frac{2{,}970{,}000}{104 \times 0.40} = 71{,}300 \text{ sq. ft.}$$

Basing the area on 4 B.t.u. dissipated per sq. ft. per degree difference in temperature per hour increases the above figures to $28{,}550 \times \frac{5.2}{4} = 37{,}100$ sq. ft. for 40 per cent load factor and $\frac{37{,}100}{0.40} = 92{,}800$ sq. ft. for 100 per cent load factor.

The above figures correspond to:

$$\frac{37{,}100}{500} = 74 \text{ sq. ft. per i.hp. for 40 per cent load factor.}$$

$$\frac{92{,}800}{500} = 186 \text{ sq. ft. per i.hp. for 100 per cent load factor.}$$

The per cent loss by evaporation is $100 \times \frac{28{,}550 \times 0.10}{99{,}000}$ or 2.9.

Cooling Pond Test. The results of tests obtained from a cooling pond located at Wampum, Pa., as reported by the "Practical Engineer," July 15, 1912, follow:

It appears that under conditions in the northern part of the United States with engines using 15 lb. of steam per hour per horsepower with a vacuum of 26 in., a reservoir having a surface of 120 sq. ft. per hp. would be ample for cooling the condensing water.

TABLE 4

HEAT RADIATION TESTS ON CONDENSER-WATER RESERVOIR

Area of reservoir, 288,000 sq. ft.; average depth of reservoir, 5.36 ft.; capacity of reservoir, 1,543,680 cu. ft. = 96,480,000 pounds

Date of Tests	Week Ending May 7, 1911	Week Ending July 12, 1911	Week Ending Nov. 27, 1911
Amount of water pumped from river, lb	10,458,956	29,050,875	4,648,140
Average temperature of river water, deg. F	57.5	77	36
Average temperature of intake to power-house, deg. F	72.75	91.43	61.71
Average temperature of tail water from condenser, deg. F	101.36	129.43	90.71
Average temperature of reservoir, deg. F	87.05	110.00	76.71
Average temperature of air, deg. F	51.00	78.43	33.30
Average difference of temperature between water and air, deg. F	36.05	31.57	43.41
Change in temperature of reservoir during test, deg. F	0.25	7.00	2.00
Steam condensed by engines, lb	5,752,289	6,433,045	6,145,148
Steam condensed by compressors, lb	877,204	936,314	876,273
Latent heat of steam condensed, lb	1024.7	1007.1	1026.0
Heat delivered to reservoir by engines, B.t.u.	5,894,370,000	6,478,720,000	6,304,922,000
Heat delivered to reservoir by compressors, B.t.u.	898,871,000	942,961,000	899,056,000
Heat to raise river water to average temperature of reservoir, B.t.u.	309,062,000	958,679,000	189,226,000
Heat given up or retained in reservoir during test, B.t.u.	24,120,000	675,360,000	192,960,000
Heat reduction in reservoir due to rain, B.t.u.	21,630,000	56,700,000	46,200,000
Heat absorbed by air and evaporation during seven days, B.t.u.	6,438,429,000	5,730,942,000	6,564,509,000
Heat absorbed by air and evaporation per sq. ft. of surface seven days, B.t.u.	22,356	19,899	23,495
Heat absorbed by air and evaporation per sq. ft. per hr., B.t.u.	133.1	118.4	139.8
Heat absorbed by air and evaporation per sq. ft. per hr., per 1 deg. difference B.t.u.	3.69	3.71	3.22

Cooling Ponds with Spray Nozzles. By spraying water into the air, a cooling may be effected through the evaporation of a part of the water, as is the case in the cooling tower.

The total exposed surface of the sprayed jet meets less air per pound than in the cooling tower, and on this account it is often advisable to spray 30 to 50 per cent of the water a second time before sending it through the condenser.

Generally, spray nozzles of the size known as 2-inch are the most economical. The 2-inch size screws on to a 2-inch outlet, the opening in the nozzle tip being about 0.8 inch. As many

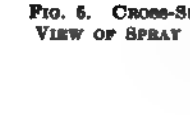

FIG. 5. CROSS-SECTIONAL VIEW OF SPRAY NOZZLE.

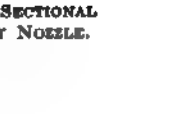

FIG. 6. SECTION THROUGH SPRAYS.

FIG. 7. ARRANGEMENT OF NOZZLES.

nozzles should be provided as are needed to discharge the entire weight of condensing water under a pressure of not over 15 pounds gage at the nozzle.

The nozzles should be set from 8 to 10 feet apart, if 2 inch; a greater distance if over 2-inch. Where a considerable number of nozzles are used, it is customary to have the water which is sprayed into the air fall back into an artificial pond one or two feet deep.

When a number of nozzles are in use the aspirator action exerted by the jets causes a current

of air to flow along the surface of the pond from the edge toward the center. This current of air assists, to some extent, in the cooling.

In some few instances spray nozzles have been put along the edges of a narrow brook and the falling spray caught on board fences inclined 30 degrees with the ground and draining into the brook.

There are several small plants where the cooling nozzles discharge on to the roof of the building. The extra head of water on the circulating pump, however, makes this inadvisable.

Experiments on *Schuette-Koerting* nozzles of sizes known as 3-inch, 2-inch, and 1-inch have been carried on at the *Massachusetts Institute of Technology* since 1908.

The nozzle under test is placed at the center of a flat roof about 44 feet by 40 feet, sloping 1 foot in 10 feet, and the water caught on the roof drained into weighing tanks and weighed.

The discharge through the nozzle is figured from the pressure shown by a gage attached to a piezometer just beneath the nozzle, the coefficient for each nozzle having been determined to three figures by exhaustive tests made in the laboratory. From the tests on the *Schuette-Koerting* nozzles, it appears that:

(1) The temperature of the water after spraying is more dependent upon the temperature and humidity of the atmosphere and upon the fineness of the spray than upon the initial temperature of the water. Therefore it is advisable to spray the water as hot as may be without excessive steaming.

(2) At high humidity, 80 or 90 per cent, the temperature of the water may be lowered to within 12 or 13 degrees F. of the temperature of the air, with a total drop in temperature of 35 to 40 degrees F.

(3) At low humidity, 20 to 30 per cent, the temperature of the water after spraying may be as much as 8 degrees F. below the temperature of the air and the total drop in temperature 40 to 45 degrees F.

(4) The loss of water by evaporation is approximately 0.15 pound per degree lowering of temperature per 100 pounds of water discharged, or a gross loss of about 6 per cent for 40 degrees F. lowering of temperature. In no case was the loss found to exceed 7 per cent.

TABLE 5

SCHUETTE-KOERTING NOZZLE CAPACITIES

Size of Nozzle in Inches	Capacities in Gallons per Minute at Various Pressures					
	5 Lb.	6 Lb.	7 Lb.	8 Lb.	9 Lb.	10 Lb.
2	54	60	65.5	70.5	75	78
2½	77	85	92	98	103	106
3	115	125	133	140	146	151

Under ordinary atmospheric conditions (air at 70° F., and 60 per cent relative humidity) the operation of a condensing and recooling outfit of this type will be approximately as follows:

Vacuum Inches	Lb. of Water Per Lb. Steam	Corresponding Rise in Temp. of Cooling Water	Approx. Temp. of Discharge from Condenser F.	Degrees Reduction	Temp. of Water After Spraying F.	Degrees Above Atmosphere F.	Reduction Obtained by
28″	50	20	92	20	72	2	Single Spraying
27″	35	29	105	29	76	6	Single Spraying
26″	30	34	110	34	81	11	Single Spraying

TABLE 6

LOG OF SPRAY-COOLING POND 5000-KW. STEAM TURBINE PLANT IN NEW ENGLAND

Month	Humidity	Temp's	8 A.M.	12 M.	4 P.M.	
January	62%	T_1	68°	73°	73°	Clear
		T_2	48°	58°	58°	
		T_3	8°	14°	20°	
February	88%	T_1	75°	81°	83°	Cloudy
		T_2	54°	61°	63°	
		T_3	29°	33°	35°	
March	50%	T_1	79°	86°	90°	Clear
		T_2	58°	66°	70°	
		T_3	30°	50°	43°	
April	55%	T_1	85°	90°	92°	Clear
		T_2	66°	71°	73°	
		T_3	56°	68°	68°	
May	72%	T_1	89°	94°	97°	Clear
		T_2	70°	75°	78°	
		T_3	65°	72°	70°	
June	90%	T_1	107°	111°	116°	Cloudy
		T_2	78°	83°	85°	
		T_3	57°	68°	68°	
July	70%	T_1	108°	118°	118°	Clear
		T_2	90°	93°	93°	
		T_3	90°	98°	102°	
August	84%	T_1	112°	114°	116°	Cloudy
		T_2	88°	89°	90°	
		T_3	72°	74°	79°	
November	70%	T_1	89°	90°	88°	Cloudy
		T_2	62°	64°	63°	
		T_3	27°	33°	34°	

Operating Pressure, 11 lb. per sq. in.
T_1 = temperature of discharge water, in degrees F.
T_2 = temperature of water after spraying, in degrees F.
T_3 = temperature of surrounding air, in degrees F.
Hum. = relative humidities taken at 8 P. M.

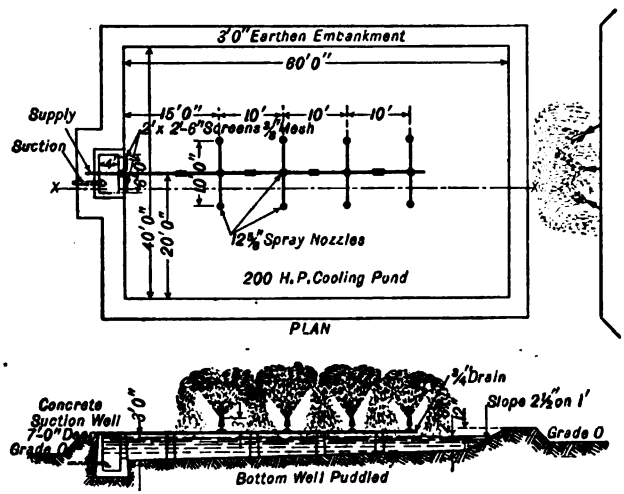

FIG. 8. COOLING POND WITH SPRAY NOZZLES.

Area of Cooling Pond Equipped with Spray Nozzles. Based on the average weather conditions prevailing in the Central and Northern States, it is customary to allow about 1 sq. ft. of pond surface for every 200 to 250 lb. of water sprayed per hour for plants above 1000 i.hp.

Smaller plants will require a somewhat larger area due to the fact that it is desirable to keep the spray nozzles about 20 feet from the edge of the pond. Fig. 8 shows the design suitable for a 200 hp. plant equipped with twelve ⅝-in. *Spray Engineering Co.'s* nozzles. The area required for large installations may be calculated on a basis of using 0.2-in. nozzles working at ten pounds per sq. in. pressure, giving a discharge of 39,000 lb. water per hour.

COOLING TOWERS

The condensing water coming from either steam or ammonia condensers is pumped to the top of a tower, which is usually filled with wooden or tile checkerwork or galvanized steel wire screens. The water in its passage down through the checkerwork presents a large evaporating surface to the air flowing upward through the tower, the cooling of the water being effected principally by the evaporation of a small portion of it. In theory the action is similar to that of a humidifier. The air will leave the top of the tower 90 to 100 per cent saturated and 5 to

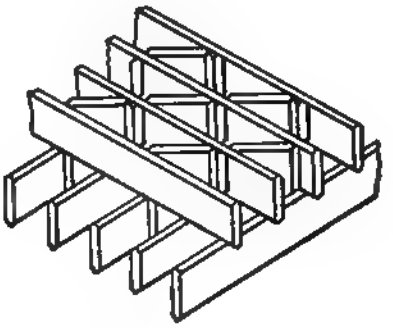

FIG. 9. TYPES OF WOOD CHECKERWORK FOR COOLING TOWERS.

15 degrees lower than the temperature of the entering water, average figures being 95 per cent saturation and 10 degrees lower temperature.

The *limit of cooling effect* is reached when the water has been reduced in temperature to the wet-bulb temperature of the entering air at which point evaporation ceases. This is the temperature of adiabatic saturation for the given condition. Commercial installations vary considerably in the degree to which they approach this limit.

Published tests indicate that the actual drop in temperature of the water passing through the tower will be approximately 30 to 50 per cent of the maximum possible drop.

Let t_1 = temperature of hot water entering top of tower.
t_2 = temperature of water leaving base of tower.
t = wet-bulb temperature of entering air at base of tower.
$t_1 - t$ = maximum possible drop in temperature of the water.
$0.40\ (t_1 - t)$ = drop in temperature that may ordinarily be obtained in commercial installations.

Then $t_2 = t_1 - 0.40\ (t_1 - t)$.

E = efficiency of tower.

$$= \frac{t_1 - t_2}{t_1 - t}$$

= 0.30 to 0.50, average value 0.40.
Q_1 = heat content of entering air above 0° F.
Q_2 = heat content of leaving air above 0° F.
W = weight of water to be cooled per min.
w = weight of air to be circulated per min.
d = density of air corresponding to dry-bulb temperature of entering air.
C = cu. ft. of air measured at dry-bulb temperature of entering air.

$$w(Q_2 - Q_1) = W(t_2 - t_1), \qquad w = \frac{W(t_2 - t_1)}{Q_2 - Q_1}, \qquad C = \frac{w}{d}$$

The values of Q_1 and Q_2 may be read direct from the "Psychrometric Chart" (Fig 4), or calculated by means of the saturated air tables. See Table 7 for examples.

The air is circulated through cooling towers either by natural draft or by means of fans. Fan draft towers, as ordinarily constructed, have an overall height of approximately 30 to 35 feet, the water being raised to a height of about 28 to 32 feet to the distributing trough. With natural draft towers a chimney of approximately 40 feet in height is added, making the overall height about 75 feet. The water is elevated to the same height as with the fan draft type of tower.

FIG. 10. FAN DRAFT TOWER—WOOD CONSTRUCTION.

Cooling Tower Test. The following gives the results of a test made on a *Wheeler* fan draft cooling tower plant at Elizabethport, N. J. The tower is working in connection with a *Wheeler*

TABLE 7
COOLING EFFECT FOR VARIOUS TOWER EFFICIENCIES

Wet Bulb Temperature of Air t	Initial Temperature of Water Entering Tower, t_1, 105°					110°					115°				
	Max. Possible Temp. Drop Degs.	$E = 0.40$ Actual Drop in Temp. 0.40(105-t)	$E = 0.40$ Final Temp. t_2	$E = 0.60$ Actual Drop Degrees 0.60(105-t)	$E = 0.60$ Final Temp. t_2	Max. Possible Temp. Drop Degrees	$E = 0.40$ Actual Drop Degrees 0.40(110-t)	$E = 0.40$ Final Temp t_2	$E = 0.60$ Actual Drop Degrees 0.60(110-t)	$E = 0.60$ Final Temp. t_2	Max. Possible Temp. Drop Degs.	$E = 0.40$ Actual Drop 0.40(115-t)°	$E = 0.40$ Final Temp. t_2	$E = 0.60$ Actual Drop 0.60(115-t)	$E = 0.60$ Final Temp. t_2
35	70	28	77	42	63	75	30	80	45	65	80	32	83	48	67
40	65	26	79	39	66	70	28	82	42	68	75	30	85	45	70
45	60	24	81	36	69	65	26	84	39	71	70	28	87	42	73
50	55	22	83	33	72	60	24	86	36	74	65	26	89	39	76
55	50	20	85	30	75	55	22	88	33	77	60	24	91	36	79
60	45	18	87	27	78	50	20	90	30	80	55	22	93	33	82
65	40	16	89	24	81	45	18	92	27	83	50	20	95	30	85
70	35	14	91	21	84	40	16	94	24	86	45	18	97	27	88
75	30	12	93	18	87	35	14	96	21	89	40	16	99	24	91
80	25	10	95	15	90	30	12	98	18	92	35	14	101	21	94
85	20	8	97	12	93	25	10	100	15	95	30	12	103	18	97

TABLE 8
RESULTS OF TESTS ON A WHEELER FORCED DRAFT COOLING TOWER

Cooling Water			Air					Cu. Ft. of Air per Minute		Efficiency E†
Gallons per Minute	Temperature		Entering			Outgoing				
	t_1	t_2	Temp.	Hum.	Wet Bulb Temp t	Temp.	Hum.	Anemometer	Calculated‡	
651	105	84.7	71	40	57	90	100	53,900	42,000	0.42
638	107.8	87.5	72	60	63	93	100	50,100	.....	0.45
638	112	88.5	66	60	56	96	100	51,400	.....	0.42
643	108.5	87	69	48	57	92	100	50,200	.....	0.39
640	109.9	90.5	83	48	69	95	100	50,600	41,100	0.47
632*	116	98	43	75	40	101	100	23,500	.....	0.23
630*	135	115.8	60	73	55	118	100	17,575	.....	0.24

* In these tests the fan was not running—natural draft.

† Efficiency as calculated by authors $\left(E = \frac{t_1 - t_2}{t_1 - t}\right)$

‡ Calculated by authors.

surface condenser of 280 square feet of cooling surface, mounted over a 10 x 12 x 12 combined air and circulating pump. The efficiency (E) has been added by the authors:

Observations made on June 24, 1904:

Temperature of air	81 degrees.
Wet bulb, t	69 degrees.
Temperature of air at top of tower	89 degrees.
Temperature of water in troughs, t_1	105 degrees.
Temperature of water in tank, t_2	83 degrees.
Revolutions of fan, 239 r.p.m., air pressure	$\frac{5}{8}$ inch water.
Velocity of air out of tower	822 feet per minute.
Gallons of water per minute passing over mats	385 per minute.
Vacuum	26 inches.

Temperature of air-pump discharge	87 degrees.
Efficiency of tower, E	0.61.

Observations made June 28, 1904, 9 A.M.

Temperature of air	76 degrees.
Wet bulb, t	59 degrees.
Temperature of air at top of tower	81 degrees.
Temperature of water in troughs, t_1	96 degrees.
Temperature of water in tank, t_2	78 degrees.
Revolutions of fan, 232 r.p.m., air pressure	$\frac{3}{8}$ inch water.
Velocity of air out of tower	680 feet per minute.
Gallons of water passing over mats	406 per minute.
Vacuum	25.5 inches.
Temperature of air-pump discharge	90 degrees.
Efficiency of tower, E	0.49.

Observations made June 28, 1904, 3 P.M.

Temperature of air	74 degrees.
Wet bulb, t	57 degrees.
Temperature of air at top of tower	83 degrees.
Temperature of water in troughs, t_1	99 degrees.
Temperature of water in tank, t_2	80 degrees.
Revolutions of fan, 237 r.p.m., air pressure	$\frac{5}{16}$ inch water.
Velocity of air out of tower	769 feet per minute.
Gallons of water passing over mats	470 per minute.
Vacuum	25.5 inches.
Temperature of air-pump discharge	92 degrees.
Efficiency of tower, E	0.45.

Observations made June 29, 1904:

Temperature of air	78 degrees.
Wet bulb, t	71 degrees.
Temperature of air at top of tower	86 degrees.
Temperature of water in troughs, t_1	108 degrees.
Temperature of water in tank, t_2	82 degrees.
Revolutions of fan, 241 r.p.m., air pressure	$\frac{3}{8}$ inch.
Velocity of air out of tower	772 feet per minute.
Gallons of water passing over mats	430 per minute.
Vacuum	25.5 inches.
Temperature of air-pump discharge	93 degrees.
Efficiency of tower, E	0.71.

TABLE 9

TEST OF WHEELER-BALCKE NATURAL DRAFT COOLING TOWER AT BRISTOL, CONN.

Test Number	Aug. 1912	Water			Air			
		G. P. M.	Temp. In	Temp. Out	Temp. In	Temp. Out	Humidity In	Humidity Out
1	13	850	114	84	84	..	62	100
2	15	877	104	86	80	95	51	100
3	16	880	94	76	68	84	47	100
4	16	1065	92	75	70	83	37	100
5	16	1058	100	74	70	91	37	100
6	26	850	114	87	81	99	76	100
7	27	850	104	80	77	95	48	100

Example. Required the amount of air to be circulated per minute, size of fan and power required for a cooling tower to cool the circulating water for a jet type condenser connected to a 500-kw. unit. Assumed water rate of unit, 20 lb. per kw.-hour 26 in. vacuum referred to a 30-in. barometer. Temperature corresponding to vacuum is 125° F.; with a 10° terminal difference the temperature of the water leaving will be 115° F. Assume that the average outside air temperature is 65° F. and the relative humidity is 60 per cent for the locality in question.

Referring to the "Psychrometric Chart," it is found that the wet bulb temperature corresponding to this condition is 57° F. The maximum theoretical drop in temperature of the water

FIG. 11. FAN DRAFT COOLING TOWER. TILE FILLING. (*Worthington.*)

if cooled down to the limit would be 115 − 57 = 58 degs. In a properly designed cooling tower the actual drop in temperature should be about 40 per cent (tower efficiency 0.40) of this amount, or 58 × 0.40 = 23 degs. The final temperature of the water leaving the base of tower and the initial temperature of the circulating water for the condenser may be safely assumed as 115 − 23 = 92° F., say 90° F., for the conditions specified.

The air leaving top of tower will be assumed 10 degs. lower than the entering water or 115 − 10 = 105° F. and 95 per cent saturated.

The *heat removed per pound of air circulated* will be the difference between the heat content per lb. of the air leaving the top of tower and the heat content per lb. of the entering outside air measured above 0° F. in each case.

The "heat content" of a mixture of air and vapor for any condition is given by the formula: $Q = C_{ps}\, t + xrW$ in which C_{ps} = 0.24 sp. ht. of air at constant pressure, t = dry bulb temperature, x = relative humidity expressed as a decimal, r = latent heat corresponding to temperature t, W = weight of vapor mixed with 1 lb. of dry air when "saturated" (100 per cent relative humidity) at temperature t. Heat content of entering air (initial condition), 65° F. and a relative humidity of 50 per cent.

$$Q_1 = 0.24 \times 65 + 0.50 \times 1055.5 \times 0.0132 = 22.5 \text{ B.t.u.}$$

Heat content of leaving air (final condition) 105° F. and a relative humidity of 95 per cent.

$$Q_2 = 0.24 \times 105 + 0.95 \times 1033.9 \times 0.0500 = 74.3 \text{ B.t.u.}$$

The heat removed per lb. of air circulated is therefore $Q_2 - Q_1 = 74.3 - 22.5 = 51.8$ B.t.u.

The total heat to be removed from the circulating water on a basis of 38 lb. water per lb. of steam condensed, corresponding to a 26-in. vacuum, will be:

$$\frac{500 \times 20 \times 39 \times (115 - 90)}{60} = 162{,}500 \text{ B.t.u. per min.}$$

The weight of air to be handled by the fans per min. is therefore 162,500 / 51.8 = 3138 lb. The density of air at 65° F. is approximately 0.0756 lb. per cu. ft. The capacity of fan required is 3138 / 0.0756 = 41,500 cu. ft. per min. The total resistance against which the fan is to operate should not ordinarily exceed ⅜" water.

Referring to Table 10 we find that the nearest size disc type fan for the above capacity and pressure is a 96-in. diam. wheel. The efficiency of this type of fan is approximately 0.33. The brake horsepower for the fan is then: $\text{d.hp.} = \frac{41{,}500 \times \frac{3}{8} \times 5.2}{0.33 \times 33{,}000} = 7.4.$

Size of Tower and Evaporating Surface. In planning a cooling tower the water should be kept in contact with the evaporating surface (checkerwork, mats, etc.) and not allowed to fall free.

The inside area of the tower may be approximated by allowing an air velocity of approximately 700 ft. per min. through the free area. The area of the evaporating surface may be calculated on a basis of 200 B.t.u. per sq. ft. per hour for a 10-deg. drop in the temperature of the circulating water and about 700 B.t.u. for a 35-deg. drop.

Example. The net or free area of tower required for the amount of air given by the preceding example is 41,110 ÷ 700 = 60 sq. ft. The total area will depend upon the type of evaporating surface employed. In this example a checkerwork of 1" x 4" cypress boards placed on edge and 5" centers will be assumed, the free area being equal to 64 per cent of the total or gross area. The total area required is therefore 60 ÷ 0.64 = 94 sq. ft.

For a 25 deg. temperature drop approximately 500 B.t.u. per sq. ft. per hour will be dissipated. The total area of evaporating surface required is: 60 × 162,500 ÷ 500 = 19,500 sq. ft.

With the arrangement of evaporating surface stated there will be nearly 8 sq. ft. of surface per cu. ft. of checkerwork, then 19,500 ÷ 8 = 2,438 cu. ft. is necessary.

This volume is secured by making the checkerwork 10' x 10' x 24' high. The total height of the tower, allowing for the 8 ft. dia. fan and 2 ft. for the distributing troughs, etc., is 34 ft. The catch basin or sump at the base of tower may be made about 4 ft. deep and constructed of concrete if set in the ground

Power Required to Operate Fan Draft Cooling Towers. Assuming a centrifugal pump

efficiency of 0.60 and a head of 45 ft. to allow for pipe friction, the brake horsepower required to pump the cooling water in the preceding example is:

$$\text{Pump d.hp.} = \frac{500 \times 20 \times 39 \times 45}{0.60 \times 60 \times 33{,}000} = 14.8.$$

The power required for the fan, previously calculated, is 7.4 d.hp. The total power required will be: $14.8 + 7.4 = 22.2$ d.hp.

If pump and fan are each driven by a motor having an efficiency of 0.85, the electrical horsepower input will be $22.2 \div 0.85 = 26.1$ or $26.1 \div 1.34 = 19.5$ kw. This amounts to $19.5 \div 500$ or 3.9 per cent of the power generated by the main unit.

If the fan and pump are each driven by a small high-speed steam engine, the water rate of which is 40 lb. per i.hp.-hour and with an assumed mechanical efficiency of 87 per cent, the steam required will be $\frac{22.2 \times 40}{0.87} = 1{,}020$ lb. per hour.

Specification and Guarantee. For every cooling tower a clear and precise guarantee fully protecting the interests of the purchaser should be given, embracing.

Efficiency—temperature from and to which the water is to be cooled under given atmospheric conditions (wet bulb temperature).

Capacity –amount of water to be cooled.

Power required for operating the fans (maximum and average).

Durability (according to practical experience).

Workmanship.

For the computation of correct estimates, as well as for the comparison of quotations with bids of various manufacturers, full information is necessary in regard to all the elements which may influence the construction of the cooling tower as to size, efficiency, etc.—viz.:

1. Type of Cooling Tower and material to be used for shell or frame—wood, masonry, reinforced concrete, or steel.

FIG. 12. NATURAL DRAFT COOLING TOWER, SHOWING ZIGZAG COOLING SURFACE.

2. Location and space available.

3. Altitude and atmospheric conditions prevailing at place of erection.

4. Amount of water to be cooled per hour—or maximum pounds of steam to be condensed —if for ice plant, refrigerating capacity per ton.

5. Temperature of initial water.

6. Lowest temperature of water required.

7. Amount of B.t.u. to be absorbed between temperature range of from..... to.....

In addition the type and construction of the steam (surface or jet) and of the ammonia

TABLE 10

CAPACITIES OF "A B C" TYPE D FANS

With Restricted Outlets at Various Speeds

(Ratio of Velocity Pressure to Total Pressure—20%)

Dynamic Pressure.....			0.63 in. W. G.			0.4625 in. W. G.			0.321 in. W. G.			0.205 in. W. G.			0.116 in. W. G.			0.0513 in. W. G.		
Static Pressure.....			0.505 in. W. G.			0.371 in. W. G.			0.258 in. W. G.			0.165 in. W. G.			0.0931 in. W. G.			0.0411 in. W. G.		
Air Velocity.....			1,415 ft. per min.			1,210 ft. per min.			1,010 ft. per min.			809 ft. per min.			606 ft. per min.			405 ft. per min.		
Peripheral Velocity....			7,440 ft. per min.			6,375 ft. per min.			5,312 ft. per min.			4,250 ft. per min.			3,190 ft. per min.			2,120 ft. per min.		
Size of Fan	Area Case Sq. Ft.	Cir. Wheel Feet	R. P. M.	C. F. M.	B. H. P.	R. P. M.	C. F. M.	B. H. P.	R. P. M.	C. F. M.	B. H. P.	R. P. M.	C. F. M.	B. H. P.	R. P. M.	C. F. M.	B. H. P.	R. P. M.	C. F. M.	B. H. P.
18	1.865	4.712	1,580	2,645	0.79	1,350	2,266	0.50	1,126	1,890	0.27	902	1,512	0.15	676	1,132	0.06	450	756	0.02
24	3.270	6.283	1,183	4,640	1.39	1,015	3,975	0.87	848	2,315	0.50	676	2,650	0.26	508	1,983	0.11	338	1,282	0.03
30	5.110	7.854	947	7,250	2.16	812	6,210	1.35	679	5,175	0.79	541	4,133	0.40	406	3,100	0.17	270	2,070	0.05
36	7.260	9.425	790	10,300	3.06	676	8,850	1.92	565	7,350	1.11	451	5,880	0.57	339	4,410	0.24	225	2,940	0.07
42	9.850	10.996	676	13,980	4.15	580	11,960	2.62	484	9,960	1.52	386	7,960	0.77	290	5,980	0.33	193	3,990	0.10
48	13.100	12.566	593	18,550	5.52	507	15,920	3.35	424	13,260	2.02	338	10,620	1.03	254	7,266	0.43	169	5,300	0.13
54	16.500	14.137	526	23,400	6.96	451	20,020	4.33	376	16,700	2.54	300	13,360	1.30	225	10,020	0.55	150	6,690	0.16
60	20.330	15.708	473	28,800	8.56	406	24,660	5.39	338	20,600	3.13	270	16,460	1.60	203	12,350	0.68	135	8,240	0.20
72	29.100	18.850	394	41,250	12.25	338	35,330	7.72	282	29,500	4.47	225	23,600	2.29	169	17,680	0.96	113	11,780	0.29
84	39.400	21.990	338	55,800	16.60	290	47,900	10.43	242	39,900	6.04	193	31,900	3.09	145	23,900	1.31	97	15,950	0.39
96	51.250	25.133	296	72,550	21.60	254	62,250	13.58	211	52,000	7.86	169	41,500	4.02	127	31,100	1.70	85	20,750	0.50
108	64.600	28.274	263	91,600	27.25	225	78,500	17.12	188	65,500	9.92	150	52,300	5.08	113	39,200	2.14	75	26,200	0.64
120	79.800	31.416	236	113,000	33.60	203	97,000	21.13	169	80,800	12.25	135	64,600	6.26	102	48,450	2.64	68	32,250	0.78
132	96.500	34.558	215	137,000	40.70	185	117,200	25.58	154	97,650	14.78	123	78,000	7.56	93	58,550	3.19	62	39,000	0.95
144	115.000	37.700	197	163,000	48.40	169	139,600	30.50	141	116,500	17.65	113	93,200	9.03	85	69,800	3.80	57	46,600	1.13

(atmospheric or double pipe) condensers, whether gas engines, reciprocal steam engines or turbines, should be stated.

TABLE 11

APPROXIMATE GROUND AREA FOR MITCHELL-TAPPEN COOLING TOWERS

(Atmospheric Towers. Average Height 30 Feet)

Gallons per Hour	Dimensions, Feet	Gallons per Hour	Dimensions, Ft.
1,500	10.7 x 7.7	12,000	19 x 19
3,000	10.7 x 10.7	18,000	19 x 24.7
4,500	10.7 x 13.7	24,000	19 x 30.5
6,000	10.7 x 16.7	30,000	19 x 36.3

TABLE 12

APPROXIMATE DATA FOR FAN DRAFT TOWERS*

Cooling Capacity Gallons per Hour		Height Feet	Area of Tower Base	Horsepower Served Comp. Cond. Eng.	Size and No. of Fans Feet	Average R.P.M.	Average Fan Hp.
Ammonia	Steam						
2,100	4,200	25	19 x 19.5	50	1–6	110	1.25
3,100	6,200	25	19.8 x 20.0	75	1–6	160	1.75
4,200	8,400	25	20 x 20.8	100	1–7	145	2.25
6,250	12,500	25	21.5 x 22.5	150	1–8	145	3.50
8,300	16,700	25	23.3 x 24.5	200	1–9	135	5.50
11,500	21,000	26	24.5 x 25.3	250	1–10	135	8.00
12,500	25,000	26	26.5 x 27.0	300	1–10	145	11.00
17,100	34,200	27.5	27.5 x 29.5	400	1–12	115	14.00
20,750	41,500	27.5	29 x 30.0	500	1–12	145	18.00

* "Practical Engineer," January, 1916.

Cost of Cooling Towers. On a basis of a 26-in. vacuum referred to a 30-in. barometer, cooling tower costs, erected in place, are approximately 6 to 7 dollars per kw. rating of direct-connected units.

The following figures are actual costs of towers f.o.b. factory, exclusive of the motors or engines to drive the fans, rated on a basis of cooling water from 110° to 80°, vacuum 26″, ratio of cooling water to steam 1 : 50, water rate of unit 22.5 lb. per kw.-hour.

TABLE 13

Kw. Rating of Unit	Gallons Water per Minute	Pound Water per Minute	Size Tower	Size Fans	Total Weight Pounds	Price F.O.B. Factory
400	900	7,500	10′x11′x40′ ht.	2– 7′ dia.	42,000	$2,700
1,000	2,250	18,750	14′x16′x42′ ht.	2–10′ dia.	70,000	5,000

CHAPTER XV

PIPE, FITTINGS, VALVES, COVERINGS AND ACCESSORIES

PIPE

Commercial Classification of Pipe. Commercial pipe is made of *wrought-iron* or *mild steel*, in certain definite sizes, always stated in terms of the nominal internal diameters up to and including 12″. (Table 1.) Above 12″ internal diameter the size is based on the outside diameter, and the thickness of metal always specified.

There are three *weights* or *strengths* of pipe generally recognized in engineering practice, known as "standard," "extra strong" and "double extra strong," all of which have the same outside diameter for a given size.

Standard Pipe. Standard pipe is also known as *full weight* pipe and is made from sheets of sufficient thickness to permit of the necessary manipulation, such as heating and rolling, and still finish in random lengths of from 18 to 20 ft. which will weigh, including coupling on one end, within 5 per cent of "card weight" (Table 1). Unless otherwise specified, this pipe is furnished in random lengths with threads and couplings.

TABLE 1

DIMENSIONS OF STANDARD AND EXTRA STRONG* WROUGHT-IRON AND STEEL PIPE

Nominal Size	Diameter			Circumference			Internal Transverse Area		Length of Pipe in Ft. per Square Ft. of Exter'l Surface	Nominal Weight Lb. per Foot	
	External Standard and Extra Strong	Internal		External Standard and Extra Strong	Internal		Standard	Extra Strong		Standard	Extra Strong
		Standard	Extra Strong		Standard	Extra Strong					
⅛	0.405	0.269	0.215	1.272	0.848	0.675	0.0573	0.0363	9.440	0.244	0.314
¼	.540	.364	.302	1.696	1.144	.949	.1041	.0716	7.075	.424	.535
⅜	.675	.493	.423	2.121	1.552	1.329	.1917	.1405	5.657	.567	.738
½	.840	.622	.546	2.639	1.957	1.715	.3048	.2341	4.547	.850	1.087
¾	1.050	.824	.742	3.299	2.589	2.331	.5333	.4324	3.637	1.130	1.473
1	1.315	1.049	.957	4.131	3.292	3.007	.8626	.7193	2.904	1.678	2.171
1¼	1.660	1.380	1.278	5.215	4.335	4.015	1.496	1.287	2.301	2.272	2.996
1½	1.900	1.610	1.500	5.969	5.061	4.712	2.038	1.767	2.010	2.717	3.631
2	2.375	2.067	1.939	7.461	6.494	6.092	3.356	2.953	1.608	3.652	5.022
2½	2.875	2.469	2.323	9.032	7.753	7.298	4.784	4.238	1.328	5.793	7.661
3	3.500	3.068	2.900	10.996	9.636	9.111	7.388	6.605	1.091	7.575	10.252
3½	4.000	3.548	3.364	12.566	11.146	10.568	9.887	8.888	0.955	9.109	12.505
4	4.500	4.026	3.826	14.137	12.648	12.020	12.730	11.497	.849	10.790	14.983
4½	5.000	4.506	4.290	15.708	14.162	13.477	15.961	14.454	.764	12.538	17.611
5	5.563	5.047	4.813	17.477	15.849	15.121	19.990	18.194	.687	14.617	20.778
6	6.625	6.065	5.761	20.813	19.054	18.099	28.888	26.067	.577	18.974	28.573
7	7.625	7.023	6.625	23.955	22.063	20.813	38.738	34.472	.501	23.544	38.048
8	8.625	7.981	7.625	27.096	25.076	23.955	50.040	45.664	.443	28.544	43.388
9	9.625	8.941	8.625	30.238	28.089	27.096	62.776	58.426	.397	33.907	48.728
10	10.750	10.020	9.750	33.772	31.477	30.631	78.839	74.662	.355	40.483	54.735
11	11.750	11.000	10.750	36.914	34.558	33.772	95.033	90.763	.325	45.557	60.075
12	12.750	12.000	11.750	40.055	37.700	36.914	113.098	108.43	.299	49.562	65.415

NOTE.—Dimensions are nominal and, except where noted, are in inches.

* Often called extra heavy pipe.

A lighter weight of standard pipe, in sizes up to 6", known as *merchant pipe*, and running about 10 per cent below "card weight," has been discontinued by the principal manufacturers. Unless this pipe is wanted, it is necessary to specify "full weight" pipe.

Extra Strong Pipe. Extra strong pipe (Table 1) is usually specified for steam, gas or hydraulic work at pressures above 125 lb. gage. This pipe is made in random lengths of from 12 to 20 ft. and is always furnished with plain ends unless otherwise specified, although as much as 10 per cent of a total order may be in lengths from 6 to 12 ft.

Double extra strong pipe is omitted from Table 1 since its use is limited almost entirely to high-pressure hydraulic work. The same trade practice is followed in furnishing it as for extra strong pipe.

Outside Diameter Pipe. Outside diameter pipe, known as O. D. pipe (Table 1*a*), is the commercial designation applied to all regular sizes above 12". Since the terms standard or extra strong do not apply to these sizes, it is always necessary to give the thickness as well as the outside

TABLE 1*a*

OUTSIDE DIAMETER (O. D.) STEEL PIPE

Nominal weight in pounds per foot

Size Outside Diam.	Thickness								
	¼ In.	9/16 In.	3/8 In.	7/16 In.	½ In.	9/16 In.	⅝ In.	11/16 In.	¾ In.
14	36.75	45.72	54.61	63.42	72.16	80.80	89.36	97.84	106.20
15	39.42	49.06	58.62	68.10	77.50	86.81	96.03	105.20	114.20
16	42.09	52.40	62.63	72.78	82.85	92.83	102.70	112.50	122.20
17	44.76	55.74	66.64	77.46	88.19	98.84	109.40	119.90	130.30
18	47.44	59.08	70.65	82.14	93.54	104.80	116.10	127.20	138.30
20	52.78	65.76	78.67	91.49	104.20	116.90	129.40	141.90	154.30
21	55.45	69.10	82.68	96.17	109.60	122.90	136.10	149.30	162.30
22	.....	72.44	86.68	100.80	114.90	128.90	142.80	156.60	170.30
24	.....	79.13	94.70	110.20	125.60	140.90	156.20	171.30	186.30
26	.....	.....	102.70	119.50	136.30	152.90	169.50	186.00	202.40
28	.....	.....	110.70	128.90	147.00	165.00	182.90	200.70	218.40
30	.....	.....	.....	138.20	157.70	177.00	196.30	215.40	234.40

diameter. This pipe is furnished in random lengths of from 8 to 20 ft., depending on the size, and with plain ends. The threading of O. D. pipe is not recommended.

In connection with pipe sizes, Table 2, giving certain tube data, may be found to be of service.

TABLE 2

TUBE DATA, STANDARD OPEN-HEARTH OR LAP-WELDED STEEL TUBES

Size Extern. Diam.	B. W. Gage	Thickness	Internal Diam.	Circumference		Transverse Area Square Inches		Square Feet of External Surface per Ft. of Length	Length in Feet per Sq. Foot of External Surface	Nominal Weight Pounds per Ft.
				External	Internal	External	Internal			
1 ¼	10	.134	1.232	4.712	3.870	1.7671	1.1921	.392	2.546	1.955
1 ¼	9	.148	1.204	4.712	3.782	1.7671	1.1385	.392	2.546	2.137
1 ¼	8	.165	1.170	4.712	3.676	1.7671	1.0751	.392	2.546	2.358
2	10	.134	1.732	6.283	5.441	3.1416	2.3560	.523	1.909	2.670
2	9	.148	1.704	6.283	5.353	3.1416	2.2778	.523	1.909	2.927
2	8	.165	1.670	6.283	5.246	3.1416	2.1904	.523	1.909	3.234
3 ¼	11	.120	3.010	10.210	9.456	8.2958	7.1157	.850	1.175	4.011
3 ¼	10	.134	2.982	10.210	9.368	8.2958	6.9840	.850	1.175	4.459
3 ¼	9	.148	2.954	10.210	9.280	8.2958	6.8535	.850	1.175	4.903
4	10	.134	3.732	12.566	11.724	12.566	10.939	1.047	.954	5.532
4	9	.148	3.704	12.566	11.636	12.566	10.775	1.047	.954	6.000
4	8	.165	3.670	12.566	11.530	12.566	10.578	1.047	.954	6.758

NOTE.—Dimensions are nominal and, except where noted, are in inches.

Threading Pipe. The threading of either wrought-iron or steel pipe requires suitable dies adapted to the metal to be cut. Dies suitable for wrought iron will tear steel pipe, and hence the complaint is sometimes made that steel pipe is brittle. This can be readily overcome by using proper dies. All pipe is threaded uniformly using *Briggs* standard gage and taper. This taper of ¾" to 1'–0" on all standard pipe threads is necessary in order to secure a tight joint in the threads when screwing the pipe into a fitting or valve.

Testing Pipe. Pressure tests at the mill of wrought-iron or steel pipe are commonly made in order to show the presence of flaws or other defects in the *weld* or body of the pipe. Wrought pipe, as distinguished from seamless tubing, is either *butt* or *lap-welded;* sizes up to and including 1¼" being made by the former, and those 1½" and larger by the latter process. Lap-welded pipe, 1½" diameter, may safely be tested to 2500 lb. per sq. in. cold hydraulic pressure, while 12" diameter pipe should not be tested to more than 300 lb. per sq. in. The makers vary the test pressure in accordance with the diameter so as to produce approximately the same fiber stress in each size of pipe.

The *theoretical bursting pressures* for steel pipe of varying diameters ranging from ⅛" diameter to 12" diameter can be calculated, and are given by *John B. Berryman* in Table 3.

TABLE 3

THEORETICAL BURSTING PRESSURE OF WROUGHT-IRON PIPE

Based on New Material with Plain Ends. Weld Assumed to Be Perfect

(Full weight standard pipe)

Size, Inches	Bursting Pressure, Pounds	Working Pressure Factor of Safety 6, Pounds	Size, Inches	Bursting Pressure, Pounds	Working Pressure Factor of Safety 6, Pounds
⅛	20,142	3,357	3½	5,100	850
¼	19,338	3,223	4	4,704	784
⅜	14,730	2,455	4½	4,350	725
½	13,992	2,332	5	4,104	684
⅝	10,968	1,828	6	3,690	615
¾	10,224	1,704	7	3,426	571
1	8,112	1,352	8	3,228	538
1¼	7,200	1,200	9	3,078	513
1½	5,958	998	10	2,922	487
2	6,612	1,102	12	2,496	416
2½	5,658	943			
3					

The generally accepted formula for bursting pressure of a cylinder is:

$$P = 2 \times \frac{t \times S}{D}$$

in which, P = bursting pressure in pounds per sq. in.

t = thickness of metal in inches.

S = tensile strength in pounds per sq. in. = 40,000 for wrought iron and 50,000 for steel.

D = pipe diameter in inches.

Example. Find the bursting pressure of 10" full weight steel pipe, 0.366" thick, and 10.019" actual internal diameter.

$$P = \frac{2 \times 0.366 \times 50{,}000}{10.019} = 3{,}653 \text{ lb. per sq. in.}$$

If we wish to find the proper thickness of metal it is only necessary to solve the equation above for t and we have

$$t = \frac{D \times P}{2 \times S}.$$

Apparent Factor of Safety. The proper factor of safety to be employed is a matter of judgment, but for steam piping it should never be less than six. In steam lines there are stresses due to vibration, expansion and contraction, and possible shock. In water lines there may be severe shocks due to water hammer or the less severe but continual shocks from the action of the pumps. The element of corrosion has also to be considered as in some cases the original thickness of the metal may be reduced one-half in a comparatively short time. As these disturbing elements can only be assumed, it is evident that factors of safety from eight to fifteen may be employed with advantage.

The *Crane Co.* has made some bursting tests on 10-inch pipe, with the following results:

10-inch standard wrought iron, burst 1900 lb., by rule 2922 lb.

10-inch standard steel, burst 3000 lb., by rule 3648 lb.

10-inch extra strong wrought iron, burst 2700 lb., by rule 4102 lb.

None of the pieces destroyed burst at the weld, the rupture in each case being some distance from it.

Specifications for Pipe. Specifications for wrought-iron and steel pipe for the usual service conditions existing in steam systems are given in the Chapter on "Power Plant Piping." In general, three classes of service are recognized, as follows: (1) Service where pressures are 125 lb. per sq. in. or less; (2) where pressures are above 125 lb. but less than 250 lb., and (3) where pressures are less than 250 lb. but the steam is superheated. In other words, the piping as well as all valves and fittings for steam service must be adopted to either " low-pressure," " high-pressure," or "superheated " service.

EXPANSION OF PIPING

Determination of Expansion. Expansion of piping is ordinarily based on the theoretical elongation of the measured length of line for the difference in temperature between the air at the time the pipe was fitted and the final temperature when filled with steam, hot water, or gas. This elongation depends on the coefficient of linear expansion, which for steel is 0.00067 per 100° F. per 1′ 0″, or for a line 500 ft. long, fitted on a zero day and intended for steam service at 212° F., we would have $\frac{12 \times 500 \times 0.00067 \times 212}{100} = 8.5''$ increase in length. The following table is computed in this manner for steel pipe for varying temperatures and pressures:

TABLE 4

EXPANSION OF WROUGHT-IRON AND STEEL PIPE

Temperature F.°	Gage Pressure Pounds per Square Inch	Linear Expansion in Inches
160	Hot water	1.02
200		1.84
212	0	1.43
240	10	1.66
259	20	1.81
274	30	1.94
297	50	2.12
338	100	2.70
365	150	3.05
388	200	3.31
422	300	3.73
500		4.76
600	Superheated steam	6.23
650		7.03

NOTE.—Column 3 gives the theoretical increase in length of 100 feet of pipe when heated from 32° F. to the temperature or pressure given in the table. Expansion is stated in inches.

In general, the amount of lineal expansion E in inches per 100 ft. of length of pipe of any material may be determined by the following equation, using proper value for C, or from Fig. 1:

$$E = 1200 \times C \times (T - t).$$

E = expansion in inches per 100 ft. of pipe.

$(T - t)$ = temperature difference in degrees Fahrenheit.

C = coefficient of lineal expansion.
- = 0.0000111 for bronze.
- = 0.0000105 for drawn brass.
- = 0.0000095 for copper or cast brass.
- = 0.0000068 for wrought iron.
- = 0.0000067 for steel.
- = 0.0000065 for cast iron.

Methods of Providing for Expansion. The proper *provision for the expansion and contraction of piping* must be made in all cases where water, steam, or gas is to be used at high temperatures, and is usually accomplished by *long sweep bends* or *expansion joints*. Certain points, usually where branches are taken off, are securely anchored to the building structure, and the movement between these points taken up by the expansion members, such as bends or joints.

Dimensions of Pipe Bends. The allowable dimensions for pipe bends are limited by the practical considerations involved in actually bending the pipe, and Table 5 will serve as a guide in laying out expansion bends.

The radius of any bend made from pipe 2½ in. and larger should not be less than five diameters of the pipe, and a larger radius is much preferable When bends are used to take up expansion, the longer the radius the better. The figures in the following table apply to all forms of bends, and show what dimensions are required by the mill if bends are to be made of proper proportion.

If pipe bends are used to provide for the expansion of the pipe line, particular attention must be given to the proper drainage of the line at this point. The bend must be so installed that it will not act as a dam and obstruct a steam or air main with condensation.

In placing pipe bends in a line, it is common practice to put them under an initial tension stress, when cold, equal to about one-half of the total amount of expansion to be provided for when the line is hot. By doing this, the bend will be flexed with a final compression stress about equal to the initial tension stress, and will pass through a neutral point of no stress whenever it is heated up or cooled down.

EXPANSION PER 100 FEET—INCHES

FIG. 1. LINEAL EXPANSION OF PIPE OF VARIOUS MATERIALS FOR DIFFERENT TEMPERATURE CHANGES AND LENGTHS.

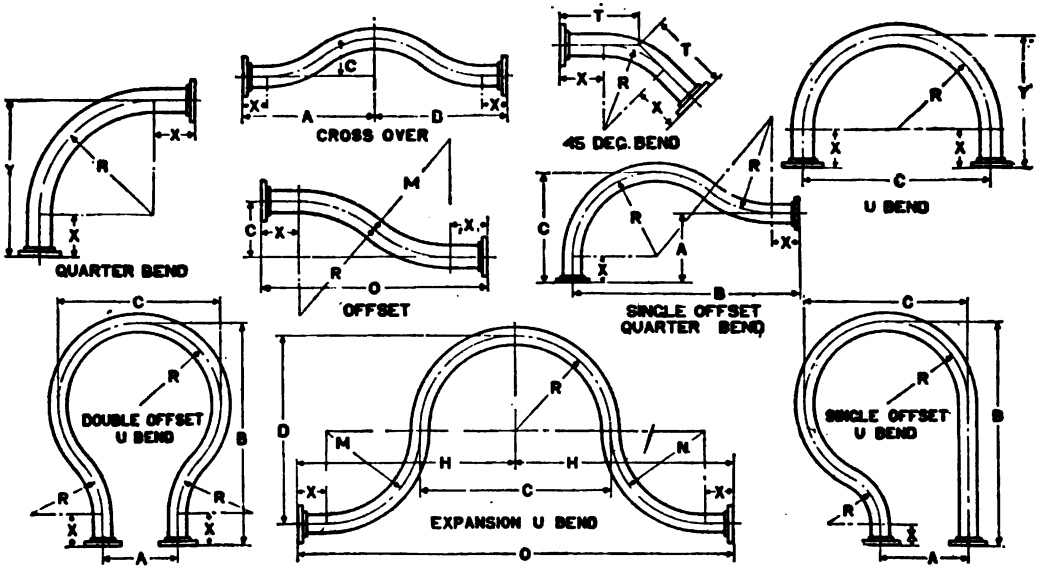

FIG. 2.

TABLE 5

PIPE BENDS MADE FROM LAP-WELDED STEEL PIPE

(See Fig. 2)

Size of Pipe	R-M-N Advisable Radius of Bends	*T* Center to End or Face of Flanges		*X* Length of Tangents or Straight Pipe on Each Bend	*Y* Center of Bends to Face of Flanges or Ends of Pipe		Lineal Feet of Pipe in Each Quarter Bend		Lineal Feet of Pipe in Each U-Bend		Lineal Feet of Pipe in Each 45 Deg. Bend		Minimum Radius to Which Bends Can Be Made from Extra Strong Pipe Only, Inches
Inches	Inches	Feet	Inches	Inches	Feet	Inches	Feet	Inches	Feet	Inches	Feet	Inches	
2½	12½	0	9 3/16	4	1	4½	2	3¾	3	11¼	1	5⅞	7
3	15	0	10¼	4	1	7	2	7¾	4	7½	1	7¼	8
3½	17½	1	¼	5	1	10½	3	1½	5	5	1	11⅝	10
4	20	1	1¼	5	2	1	3	5½	6	1	2	1¾	12
4½	22½	1	3 5/16	6	2	4½	3	11½	6	10¾	2	5¾	14
5	25	1	4⅜	6	2	7	4	3¼	7	6⅝	2	7½	15
6	30	1	7 7/16	7	3	1	5	1⅛	9	¼	3	1½	20
7	35	1	10½	8	3	7	5	11	10	6	3	7⅝	24
8	40	2	1 9/16	9	4	1	6	9	11	11¾	4	1½	28
9	45	2	5⅝	11	4	8	7	8¾	13	7⅝	4	9¼	35
10	50	2	8¾	12	5	2	8	6½	15	1⅛	5	3¼	40
12	60	3	2⅞	14	6	2	10	¼	18	¼	6	3¼	50
14	70	3	9	16	7	2	11	10	21	....	7	3	65
15	75	3	11 1/16	16	7	7	12	6	..	....	7	7	70
16	80	4	3⅛	18	8	2	13	5¾	..	....	8	2¾	78
18	108	5	2¾	18	10	6	17	1¾	..	....	10	⅞	88
20	120	5	7¾	18	11	6	18	8½	..	....	10	10½	104
22	132	6	⅝	18	12	6	20	3	..	....	11	7¾	132
24	144	6	5⅝	18	13	6	21	10	..	....	12	⅝	144

Bends for *small pipe* may be made cold, within certain limits, as indicated in Table 5*a* by the *National Pipe Bending Co.*, although for minimum requirements this pipe must be bent hot as for large pipe.

TABLE 5a

DIMENSIONS OF MINIMUM BENDS AND COILS

Nominal Size of Pipe		Cold Bent											Hot Bent						
		⅛	¼	⅜	½	¾	1	1¼	1½	2	2½	3	3½	4	4½	5	6	7	8
Least Ordinary	Center Radius 90° Bends	1½	1½	1½	2	2½	3	4	6	8	10	18	20	22	24	27	30	■	42
	Center Diameter U-Bends	2½	3	3½	4	5	6	8	12	16	20	36	40	44	48	54	60	72	84
	Outside Diameter Coils.	5	6	7	8	10	12	15	18	20	24	42	44	49	54	60	72	84	96
Difficult	Center Radius 90° Bends	½	1	1½	1½	2	2½	3	4	6	8	15	14	16	18	20	25	■	36
	Center Diameter U-Bends	1½	2	2½	3	4	5	6	8	12	16	30	28	32	36	40	50	60	72
	Outside Diameter Coils..	3	4	5	6	8	10	12	14	16	20	36	32	36	42	48	60	72	84
Approximate Limit Varying with Circumstances	Center Radius 90° Bends.	½	½	1	1½	1½	1½	2½	3	4	5	6	10	12	14	16	20	25	■
	Center Diameter U-Bends	1½	1½	2	2½	3	3½	4½	6	8	10	12	20	24	28	32	40	50	60
	Outside Diameter Coils..	2	2½	3	4	6	7	8	10	12	14	16	24	30	36	42	48	60	72

Note.—Ends on bends should be straight for a length equal to the diameter of the pipe.

Expansion Allowed by Bends. The amount of expansion allowed for by bends depends upon the radius of the bend, increasing with it, and varies inversely as the thickness of the wall.

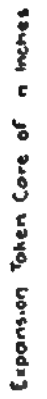

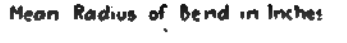

Fig. 3. Expansion Any Bend Will Allow Without Injury.

Actual tests by the *Crane Co.* have been made on pipe bends made of pipe from 1″ to 16″ diameter, and the results have been plotted by *W. L. Durand*, and are given in Fig. 3.

The formula for U-bends is:

$$E = \frac{0.0052\ R^2}{d}$$

in which, E = expansion in inches.
R = mean radius of bend in inches.
d = outside diameter of pipe in inches.

If any two of the three values are given, the third can be easily found from the curves.

Example. What is the necessary radius for a U-bend to take care of 3 in. of expansion in an 8-in. pipe? Referring to the curves and running out horizontally from 3 in. to the line marked 8 in., the radius of the bend is read as 70 in.

Expansion Joints. Either single (Fig. 4) or double-slip expansion joints, or corrugated copper expansion joints (Fig. 5), may also be used in lines when bends and offsets are not practicable.

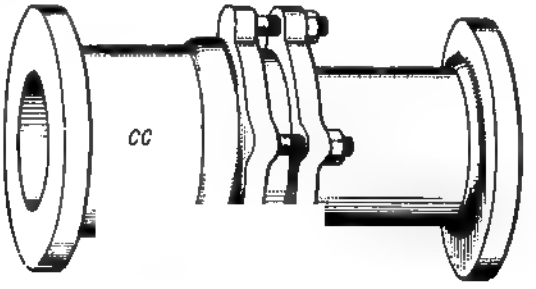

FIG. 4. STANDARD UNBALANCED SINGLE-EXPANSION JOINT.

The allowable *traverse* or movement of these joints determines the number to be installed, or the lineal feet of pipe for which each joint may compensate. Joints of the single-slip type are made up to allow a maximum traverse as follows (expressed in inches):

Pipe size	2	2½	3	3½	4	4½	5	6	7	8	9	10	12
Traverse	2½	2½	2¾	3	3½	3½	4	5	6	7	7	7	8

Joints may be specially made up to allow a *special traverse* of from 6 to 18 inches if desired, although it is generally customary to limit the traverse of one sleeve to from 3″ to 4″. Double-slip

FIG. 5. CORRUGATED COPPER EXPANSION JOINT.

expansion joints are generally designed to allow a traverse of 4″ on each sleeve for pipe sizes from 2″ to 9″, and 3½″ on each sleeve pipe for sizes from 10″ to 16″.

Slip joints are usually made with iron bodies and brass sleeves, and must have an adjustable packing gland with follower (Fig. 4). Joints may be furnished *screwed* or *flanged* for standard or extra heavy service.

The actual and theoretical amounts of expansion have been compared in a number of cases as it was formerly believed that piping would actually expand under steam temperatures about one-half the theoretical amount, due to the fact that the exterior of the pipe would not reach the full temperature of the steam in the pipe. It would appear, however, from recent experiments, that such actual expansion will in the case of well-covered pipe be very nearly the theoretical amount. In one case noted, a steam header 293 feet long, when heated under a working pressure of 190 pounds, the steam superheated approximately 125° F., expanded 8¾ inches; the theoretical amount of expansion under the conditions would be approximately $9\frac{35}{64}$ inches.

Heat loss from piping conveying steam or water should be prevented as completely as possible by the use of non-conducting coverings. The amount of this loss in uncovered lines and the saving that can be effected by insulated lines are considered later in this chapter under "Coverings."

Bellows Type Copper Expansion Joints. The form of expansion joint shown in Table 6 is suitable for exhaust-steam lines or for low-pressure water lines. These expansion joints are used almost universally on the connection between the exhaust outlet from a steam turbine and the exhaust inlet of its condenser.

The exhaust outlets of steam turbines as made at the present time are very seldom circular, but are more often oval or rectangular in shape.

TABLE 6

SIZES AND DIMENSIONS OF KELLOGG COPPER BELLOWS EXPANSION JOINT.

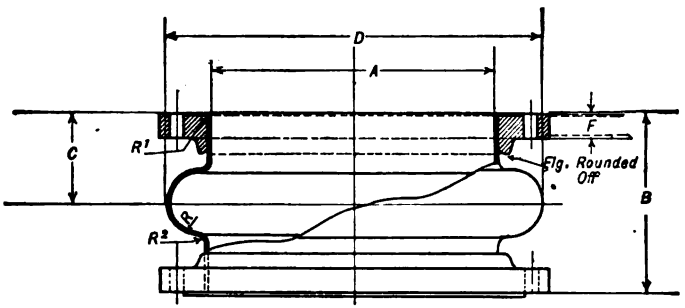

A Size, Inches	B Face to Face, Inches	C Center to Face, Inches	D Outside Diameter of Belt, Inches	R Radius of Belt, Inches	A Size, Inches	B Face to Face, Inches	C Center to Face, Inches	D Outside Diameter of Belt, Inches	R Radius of Belt, Inches
4	8	4	8¾	1½	24	14	7	31	2⅝
5	8	4	9	1½	26	14	7	34	2⅝
6	9	4½	10¾	1⅝	28	15	7½	36	3
7	9	4½	11¾	1⅝	30	15	7½	38	3
8	10	5	12¾	1⅝	32	16	8	40	3½
9	10	5	13½	1⅝	34	16	8	44	3½
10	11	5½	14½	1⅞	36	16	8	47	3½
12	11	5½	15¾	1⅞	38	17	8½	48	4½
14	12	6	20¼	2⅛	40	17	8½	50	4½
16	12	6	21¼	2⅛	42	17	8½	52	4½
18	13	6½	24½	2⅜	44	18	9	54	5
20	13	6½	26½	2¾	46	18	9	56	5
22	14	7	29	2⅝	48	18	9	58	5

Twenty inches and below have cast-iron flanges. Above 20 inches have forged steel ring flanges.
Flanges recessed so that copper projects 1/16 inch beyond face of flange. Copper lap carried out on flanges to inside edge of bolt hole.

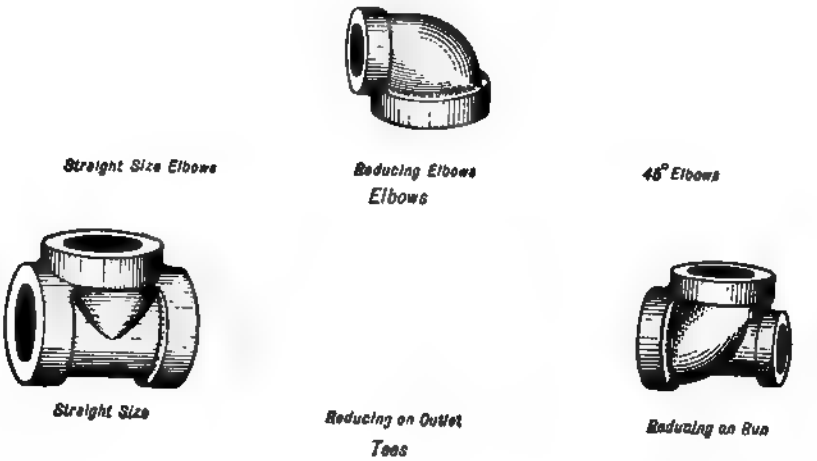

FIG. 6. CAST-IRON FITTINGS.

FITTINGS

Commercial Classifications of Fittings. Commercial fittings for joining the separate lengths of pipe together are made in a great variety of forms, and are either *screwed* or *flanged;* the former being generally used for the smaller sizes of pipe up to and including 3½", and the latter for

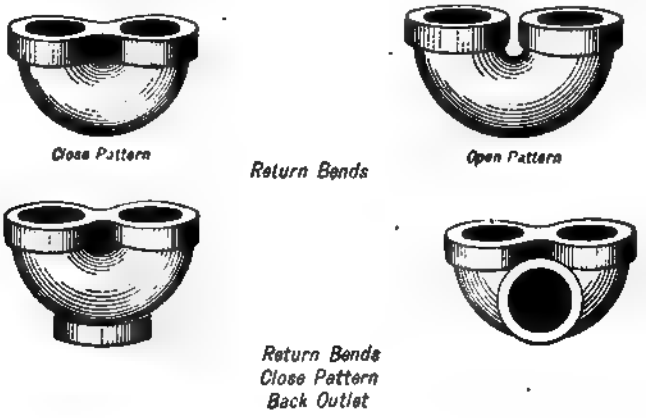

FIG. 6a. CAST-IRON FITTINGS. (*Continued*)

the larger sizes, 4" and above. Screwed fittings of large size as well as flanged fittings of small size are also made, however, and used for certain classes of work at the proper pressure.

The material used for fittings is generally *cast iron*, but in addition to this *malleable iron*, *steel* and *steel alloys* are also used, as well as various grades of *brass*. The material to be used depends on the character of the service and the pressure. In this connection see the specifications in the Chapter on "Power Plant Piping."

As in the case of pipe, there are several weights of fittings manufactured designed to be used with pipe of corresponding grade. These variations in weights are known as (1) *low-pressure* fittings for steam working pressures of 25 lb., (2) *standard* fittings for steam working pressures of 125 lb., and (3) *extra heavy* fittings for steam working pressures of 250 lb These latter fittings are suitable for water working pressures of 350 lb., and are usually tested to twice the steam working pressure or 500 lb. cold hydrostatic.

Screwed Fittings. Screwed fittings include *nipples* or short pieces of pipe of varying lengths; *couplings*, usually of wrought iron only; *elbows*, for turning angles of either 45° or 90°; *return bends*, which may be of either the *close* or *open* pattern, and may be cast with either a *back* or *side outlet; tees; crosses; laterals* or Y *branches*, and a variety of *plugs, bushings, caps, lock-nuts, flanges* and *reducing fittings*, as shown in Fig. 6. Reducing fittings as well as bushings, both of which are used in changing from one pipe size to another, may have the smaller connection tapped *eccentrically* to permit free drainage of the water of condensation in steam lines or free escape of air in water lines.

FIG. 7. COMBINATION SCREWED UNION.

In many lines it is necessary to make provision for disconnection, and a special fitting called a *union* (Fig. 7), of which there are many modifications, is used in this case. This fitting serves

TABLE 7

GENERAL DIMENSIONS OF STANDARD CAST-IRON SCREWED FITTINGS

(Crane Co.)

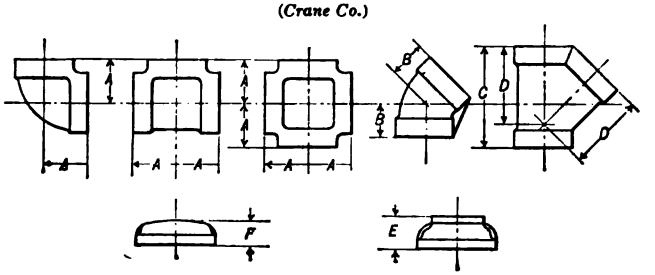

Size, Inches	Dimensions A Inches	Dimensions B Inches	Dimensions C Inches	Dimensions D Inches	Dimensions E Inches	Dimensions F Inches
¼	⅜	¾	....	....	...	...
⅜	⅜	¾	....	....	...	...
½	1 1/8	⅞	2 1/2	1 7/8	...	...
¾	1 5/16	1	3	2 1/4	...	...
1	1 7/16	1 1/4	3 1/2	2 3/4	...	...
1¼	1 3/4	1 5/16	4 1/4	3 1/4	...	...
1½	1 15/16	1 7/16	4 7/8	3 11/16	...	...
2	2 1/4	1 1/2	5 3/4	4 1/2	...	...
2½	2 1/2	1 15/16	6 1/4	5 5/16	...	...
3	3 1/8	2 3/16	7 7/8	6 1/8	2 1/8	...
3½	3 7/16	2 3/8	8 7/8	6 7/8	3 1/8	...
4	3 3/4	2 5/8	9 3/4	7 5/8	3 3/8	2 1/16
4½	4 1/16	2 13/16	11 5/8	9 1/4	3 5/8	2 3/16
5	4 7/16	3 1/16	11 5/8	9 1/4	3 7/8	2 5/16
6	5 1/8	3 7/16	13 7/16	10 3/4	4 3/8	2 5/8
7	5 13/16	3 7/8	15 1/4	12 1/4	4 13/16	2 7/8
8	6 1/2	4 1/4	16 15/16	13 5/8	5 1/4	3 1/8
9	7 3/16	4 11/16	20 1/16	16 3/4	5 11/16	3 3/8
10	7 7/8	5 1/16	20 1/16	16 3/4	6 1/16	3 5/8
12	9 1/4	6	24 1/8	19 5/8	7 1/8	4 1/4

Note.—The above dimensions are subject to a slight variation.

TABLE 8

GENERAL DIMENSIONS OF EXTRA HEAVY CAST-IRON SCREWED FITTINGS

(Crane Co.)

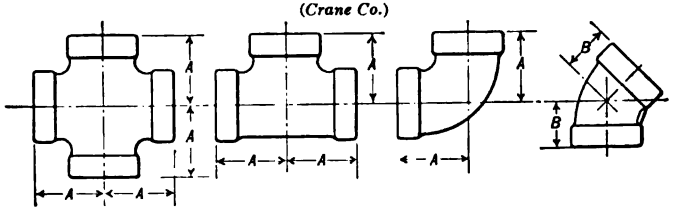

Size, Inches	Dimensions A Inches	Dimensions B Inches
1	2	1 3/4
1¼	2 1/4	1 1/2
1½	2 9/16	1 5/8
2	3	1 15/16
2½	3 1/2	2 1/4
3	4 1/8	2 1/2
3½	4 1/2	2 9/16
4	5 1/8	2 3/4
4½	5 1/2	3
5	6 1/8	3 5/16
6	7 1/4	3 3/4
7	8 1/8	4
8	9 1/8	4 3/4
10	11 3/8	4 7/8
12	13 3/4	5 1/2

Note.—The above dimensions are subject to a slight variation.

TABLE 9

GENERAL DIMENSIONS OF MALLEABLE-IRON UNIONS, UNION ELBOWS AND UNION TEES

(*Crane Co.*)

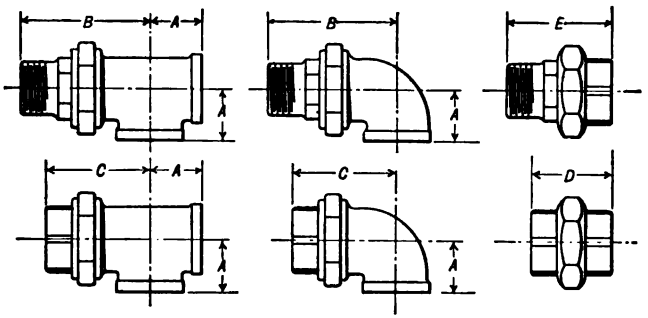

Size, Inches	Center to End			End to End			
	Dimensions *A*	Dimensions *B*	Dimensions *C*	Dimensions *D*	Dimensions *D*	Dimensions *D*	Dimensions *E*
	Elbows and Tees, Inches	Union, Male, Inches	Union, Female, Inches	Standard Union, Inches	Railroad and Chicago Unions, Inches	Crane and Navy Unions, Inches	Standard and Railroad Unions with Male and Female Ends, Inches
1/8	...	...	...	...	1 1/2	...	...
1/4	1 1/8	2 7/16	1 1/8	1 5/8	1 5/8	2 3/16	2 1/4
3/8	1 1/8	2 3/4	2 1/16	1 3/4	1 3/4	2 1/4	2 7/16
1/2	1 1/8	3 1/16	2 1/16	1 7/8	1 7/8	2 5/16	2 1/8
3/4	1 5/16	3 1/2	2 5/16	2 1/8	2 1/8	2 1/2	3 1/16
1	1 7/16	3 1/8	3	2 3/8	2 3/8	2 5/8	3 5/16
1 1/4	1 3/4	4 7/16	3 7/16	2 5/8	2 5/8	2 7/8	3 1/8
1 1/2	1 7/8	4 3/4	3 1/8	2 7/8	2 7/8	3 1/8	4
2	2 1/4	5 3/8	4 3/8	3 1/4	3 1/4	3 9/16	4 5/16
2 1/2	2 7/8	6	4 7/8	3 9/16	3 9/16	4 1/16	4 5/8
3	...	...	...	3 7/8	3 7/8	4 3/8	...
3 1/2	...	...	...	4 3/8	...	...	...
4	...	...	...	4 1/2	...	...	...

the same purpose as a pair of bolted flanges and is seldom made or used in sizes above 4″. Flanges are used generally on lines 3″ in diameter and larger. Unions are usually designed with a brass seat so that the sleeves will not rust fast together.

The union may be applied to and made a part of other fittings and valves in order to facilitate their disconnection. Combination fittings such as *union tees* and *union elbows* are shown and dimensions given in Table 9.

All fittings are *threaded* to conform with standard pipe threads, using *Briggs* standard gage and taper, and, unless otherwise specified, *right-hand threads* are used. Fittings with *left-hand* or *right- and left-hand* threads usually have some distinguishing mark cast upon them, and must be so specified.

In addition to the ordinary *close fittings* shown in Fig. 6 it is possible to obtain *long-sweep* or *long-turn* fittings designed to materially reduce the friction loss occasioned by close fittings. These fittings are made only in the standard weight.

Malleable-iron fittings, like *brass fittings*, are cast with a round instead of a flat band or bead, or with no bead at all, that is, perfectly plain. They are likely to be less porous than cast-iron fittings.

Fittings are designated as *male* or *female*, depending on whether the threads are on the outside or the inside, as shown in Table 9, where the male fittings are shown at the top.

Space Required by Screwed Fittings. The space required for fittings and branch connections, and the application of these fittings to an actual pipe line is shown in the figures at the head of Tables 10 and 11. The minimum clearance dimensions are also given in Tables 10 and 11, and will be found useful in laying out steam and water piping where screwed fittings are to be employed.

TABLE 10

APPLICATIONS OF CAST-IRON SCREWED FITTINGS

Dimensions in inches

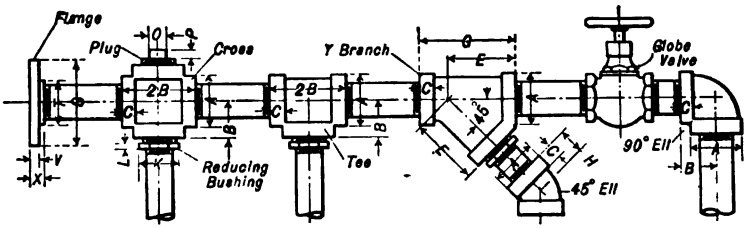

Size of Pipe	A	B	C	E	G	H	K	L	O	P	S	T	V	X
1/8	21/32	3/4	5/16	1 3/16	1 13/32	21/32	...	..	1/4	1/4	....	...	...	...
1/4	1 1/8	29/32	13/32	1 7/16	2 7/32	25/32	...	..	3/8	1/4	....	...	...	...
3/8	1 3/8	1 1/16	1/2	1 11/16	2 19/32	29/32	13/32	1/4	3/8	5/16	....	...	...	...
1/2	1 5/8	1 1/4	9/16	2 1/32	3 1/16	1 1/32	1 3/32	1/4	3/8	5/16	....	...	...	...
3/4	1 15/16	1 7/16	21/32	2 13/32	3 21/32	1 3/16	1 9/32	1/4	7/16	3/8	3 1/2	1 1/2	7/16	5/8
1	2 5/16	1 11/16	3/4	2 29/32	4 9/32	1 3/8	1 21/32	3/8	11/16	7/16	4	1 15/16	7/16	11/16
1 1/4	2 3/4	2	27/32	3 1/2	5 3/32	1 19/32	2	3/8	3/4	1/2	4 1/2	2 5/16	1/2	3/4
1 1/2	3 1/8	2 3/16	29/32	3 29/32	5 19/32	1 11/16	2 5/32	3/8	13/16	1/2	5	2 5/8	9/16	7/8
2	3 11/16	2 19/32	1 1/32	4 3/4	6 3/4	2	2 3/4	3/8	1 1/16	9/16	6	3 1/8	5/8	1
2 1/2	4 5/16	2 21/32	1 5/32	5 9/16	7 13/16	2 1/4	3 15/32	7/16	1 3/16	5/8	7	3 5/8	11/16	1 1/16
3	5 1/32	3 11/32	1 1/4	6 15/32	8 15/16	2 15/32	4 1/32	1/2	1 5/16	5/8	7 1/2	4 5/16	3/4	1 1/8
3 1/2	5 23/32	3 3/4	1 3/8	7 5/16	10 1/16	2 3/4	5 3/16	1/2	1 1/2	3/4	8 1/2	4 7/8	13/16	1 3/16
4	6 3/8	4 1/8	1 1/2	8 5/16	11 5/16	3	5 29/32	1/2	1 3/4	3/4	9	5 3/8	15/16	1 1/4
4 1/2	7 1/32	4 1/2	1 19/32	8 15/16	12 3/16	3 1/4	6 1/32	9/16	2	13/16	9 1/4	5 13/16	15/16	1 5/16
5	7 3/4	4 27/32	1 11/16	9 3/4	12 5/8	3 15/32	7 3/16	9/16	2 1/4	13/16	10	6 7/16	15/16	1 7/16
6	9	5 17/32	1 13/32	11 5/16	15 7/32	3 29/32	8 5/8	3/4	2 1/2	1	11	7 9/16	1	1 1/2

Method of Designating Reducing Fittings. In describing reducing fittings with more than two threaded openings for pipe connections, it is very necessary to specify these openings in a certain recognized order. For example, a reducing tee is always denoted by the run, first beginning with the larger opening, and ending with the side outlet, as in Fig. 8, where the tee shown is a 10″ x 8″ x 6″. In the case of a cross, read through one way, or the run, and then through the other way, as in Fig. 9, where the cross is a 10″ x 8″ x 6″ x 5″.

Tees in which the side outlet is larger than the openings through the run are known as *bull-head tees*, and are specified in the same manner as for reducing tees.

Reducing flanges are always specified by naming the smaller pipe size first, and then the outside diameter of the flange, as a 10″ x 19″ flange, which means that a 10″ line is to be connected to a 12″ valve or fitting since a 12″ standard flange is 19″ across its outside diameter. Do not use the larger pipe size at all.

Flanged Fittings. Flanged fittings are generally used in the best practice for connecting all piping above 6″ in diameter. While screwed fittings may be used for the larger sizes, and

TABLE 11

SPACE REQUIRED FOR BRANCH CONNECTIONS

Minimum Height of Connections off Pipe Mains

Dimensions given in inches

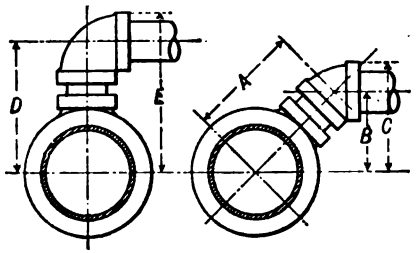

Mains	Branches	A	B	C	D	E	Branches	Mains
2	1	3 3/8	2 1/8	3 1/2	3 3/4	5	1	2
2	1 1/4	3 1/2	2 3/8	3 5/8	4 1/16	5 1/4	1 1/4	2
2	1 1/2	4	2 17/32	4 7/32	4 1/2	6 9/16	1 1/2	2
2 1/2	1	3 3/4	2 1/4	3 1/2	4 1/4	5 3/8	1	2 1/2
2 1/2	1 1/4	4 1/16	2 3/8	4 1/8	4 1/2	6 1/16	1 1/4	2 1/2
2 1/2	1 1/2	4 1/8	3 3/32	4 1/2	5 3/16	6 9/16	1 1/2	2 1/2
2 1/2	2	4 1/2	3 7/16	5 1/8	5 7/8	7 9/16	2	2 1/2
3	1	4 1/16	2 7/8	3 3/8	4 1/4	5 1/4	1	3
3	1 1/4	4 1/8	3 3/32	4 1/4	5 1/2	6 3/8	1 1/4	3
3	1 1/2	4 1/4	3 5/16	4 1/4	5 1/2	6 7/8	1 1/2	3
3	2	5 5/16	3 1/4	5 3/8	6 3/16	7 1/4	2	3
3	2 1/2	5 9/16	3 3/8	6	6 1/2	8 1/4	2 1/2	3
3 1/2	1	4 1/4	3 1/2	4 3/8	4 3/4	5 1/2	1	3 1/2
3 1/2	1 1/4	4 1/2	3 5/16	4 9/16	5 1/2	6 3/8	1 1/4	3 1/2
3 1/2	1 1/2	4 3/8	3 17/32	4 3/8	5 3/8	7 5/32	1 1/2	3 1/2
3 1/2	2	5 1/2	3 1/2	5 9/16	6 1/8	8 5/32	2	3 1/2
3 1/2	2 1/2	5 3/4	4 1/8	6 5/16	7 1/32	9 1/32	2 1/2	3 1/2
4	1	4 1/4	3 5/16	4 1/4	5 5/32	6 5/16	1	4
4	1 1/4	5	3 17/32	4 3/8	5 3/4	7	1 1/4	4
4	1 1/2	5 9/16	3 3/4	5 1/2	6 1/8	7 1/2	1 1/2	4
4	2	5 1/2	4 1/8	5 1/2	6 1/2	8 1/2	2	4
4	2 1/2	6 5/16	4 3/8	6 7/16	7 7/16	9 1/2	2 1/2	4
5	1 1/4	5 1/2	3 7/8	5 5/32	6 9/32	7 1/2	1 1/4	5
5	1 1/2	5 3/4	4 1/8	5 1/2	6 1/2	8 1/32	1 1/2	5
5	2	6 1/4	4 1/2	6 5/16	7 1/32	9 1/32	2	5
5	2 1/2	6 3/8	4 3/4	6 1/2	7 1/2	10 1/32	2 1/2	5
6	1 1/4	5 3/4	4 1/8	5 5/8	6 1/2	8 9/16	1 1/4	6
6	1 1/2	6 1/2	4 5/8	6	7 7/16	8 1/2	1 1/2	6
6	2	7	4 3/4	6 1/2	8	9 1/2	2	6
6	2 1/2	7 5/8	5 7/32	7 9/32	8 5/8	10 1/2	2 1/2	6
8	2	8 1/4	5 3/4	7 1/2	9 1/4	10 1/2	2	8
8	2 1/2	8 5/8	6 1/8	8 5/16	9 1/2	11 1/2	2 1/2	8
8	3	9	6 3/8	8 3/4	10 5/16	12 1/2	3	8

NOTE.—Table prepared by *Fred'k D. B. Ingalls, M.E.*

are perfectly satisfactory under the proper working conditions, it will be found difficult to either make or break the joints in these large sizes.

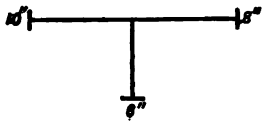

FIG. 8. TEE 10" x 8" x 6".

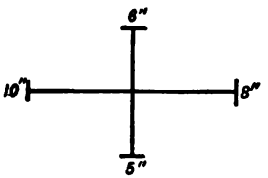

FIG. 9. CROSS 10" x 8" x 6" x 5".

In order to secure uniformity in dimensions, weight, and bolting of flanged fittings, attempts have been made to secure uniform standards, with only partial success, until Jan. 1, 1914, when

the *American Standard* went into effect with the sanction of the *A. S. M. E.* and the principal manufacturers of flanged fittings.

This new schedule provides for two grades of fittings, to be known as *standard* and *extra heavy*, suitable for steam working pressures up to 125 and 250 lb. respectively. The following explanatory notes, together with the dimension tables, give all necessary data relating to these fittings in sizes from 1″ to 48″ diameter.

Notes on the American Standard for Flanged Fittings. (See Tables of Dimensions, 12 to 19.)

1. Standard and extra heavy reducing elbows carry same dimensions center to face as regular elbows of largest straight size.

2. Standard and extra heavy tees, crosses and laterals, reducing on run *only*, carry same dimensions face to face as largest straight size.

3. If flanged fittings for lower working pressure than 125 lb. are made, they shall conform in all dimensions, except thickness of shell, to this standard and shall have the guaranteed working pressure cast on each fitting. Flanges for these fittings must be standard dimensions.

4. Where long radius fittings are specified, it has reference only to elbows which are made in two center to face dimensions and to be known as elbows and long radius elbows, the latter being used only when so specified.

5. All standard weight fittings must be guaranteed for 125 lb. working pressure and extra heavy fittings for 250 lb. working pressure, and each fitting must have some mark cast on it indicating the maker and guaranteed working steam pressure.

6. All extra heavy fittings and flanges to have a raised surface of $1/16$″ high inside of bolt holes for gaskets.

Standard weight fittings and flanges to be plain faced.

Bolt holes to be $1/8$″ larger in diameter than bolts.

Bolt holes to straddle center line.

7. Size of all fittings scheduled indicates inside diameter of ports, except for extra heavy fittings 14″ and larger, when the port diameter is $3/4$″ smaller than nominal size.

8. The face to face dimension of reducers, either straight or eccentric, for all pressures, shall be the same face to face as given in tables of dimensions.

9. Square-head bolts with hexagonal nuts are recommended.

For bolts $1\frac{5}{8}$″ diameter and larger, studs with a nut on each end are satisfactory.

Hexagonal nuts for pipe sizes 1″ to 46″ on 125 lb. standard, and 1″ to 16″ on 250 lb. standard, can be conveniently pulled up with open wrenches of minimum design of heads. Hexagonal nuts for pipe sizes 48″ to 100″ on 125 lb. standard, and 18″ to 48″ on 250 lb., standard, can be conveniently pulled up with box wrenches.

10. Twin elbows, whether straight or reducing, carry same dimensions center to face and face to face as regular straight size ells and tees.

Side outlet elbows and side outlet tees, whether straight or reducing sizes, carry same dimensions center to face and face to face as regular tees having same reductions.

11. Bullhead tees or tees increasing on outlet will have same center to face and face to face dimensions as a straight fitting of the size of the outlet.

12. Tees and crosses 9″ and down, reducing on the outlet, use the same dimensions as straight sizes of the larger port.

Sizes 10″ and up, reducing on the outlet, are made in two lengths, depending on the size of the outlet as given in the tables of dimensions.

Laterals $3\frac{1}{2}$″ and down, reducing on the branch, use the same dimensions as straight sizes of the larger port.

13. Sizes 4″ and up, reducing on the branch, are made in two lengths, depending on the size of the branch as given in the tables of dimensions.

The dimensions of reducing flanged fittings are always regulated by the reductions of the outlet or branch. Fittings reducing on the run only, the long body pattern will always be used.

Y's are special and are made to suit conditions.

Double-sweep tees are not made reducing on the run.

14. *Steel flanges, fittings, and valves are recommended for superheated steam.*

TABLE 12

AMERICAN STANDARD

STANDARD FLANGED FITTINGS

General Dimensions—Straight Sizes

All dimensions given in inches

(See Fig. 10)

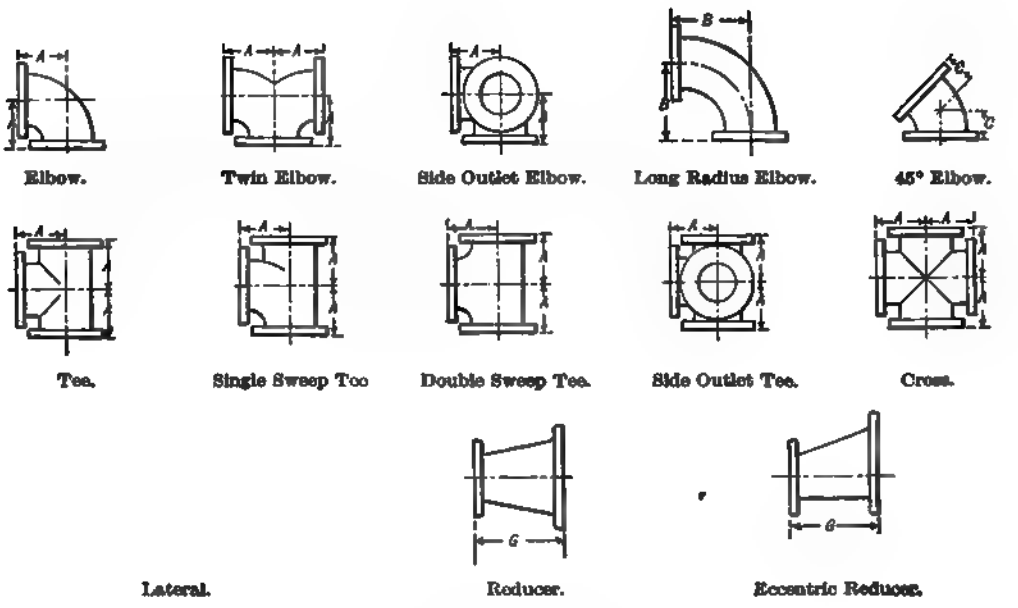

FIG. 10. STANDARD AND EXTRA HEAVY FLANGED FITTINGS
(*American Standard.*)

TABLE 13

EXTRA HEAVY FLANGED FITTINGS

General Dimensions—Straight Sizes

All dimensions given in inches

(See Fig. 10)

TABLE 14

AMERICAN STANDARD

STANDARD REDUCING FLANGE FITTINGS

General Dimensions—Reducing Tees and Crosses

All dimensions given in inches

(See Fig. 11)

Short Body Pattern

Size	1	1¼	1½	2	2½	3	3½	4	4½	5	6	7	8	9	■	12	14	15
* Size of Outlets and Smaller	All reducing fittings 1"-0" inclusive have the same center to face dimensions as straight size fittings														6	8	9	9
AA—Face to Face, Run															18	20	22	23
A—Center to Face, Run															9	10	11	11½
B—Center to Face, Outlet															9½	11	13	13½

Size	16	18	20	22	24	26	28	30	32	34	36	38	40	42	44	46	48
* Size of Outlets and Smaller	10	12	14	15	16	18	18	20	20	22	24	24	26	28	28	30	32
AA—Face to Face, Run	24	26	28	28	30	32	32	36	36	38	40	40	44	46	46	48	52
A—Center to Face, Run	12	13	14	14	15	16	16	■	18	19	20	20	22	23	23	24	26
B—Center to Face, Outlet	14	15½	17	18	19	20	21	23	24	25	26	28	29	30	31	33	34

* Long body patterns are used when outlets are larger than given in the above table, therefore have same dimensions as straight size fittings.

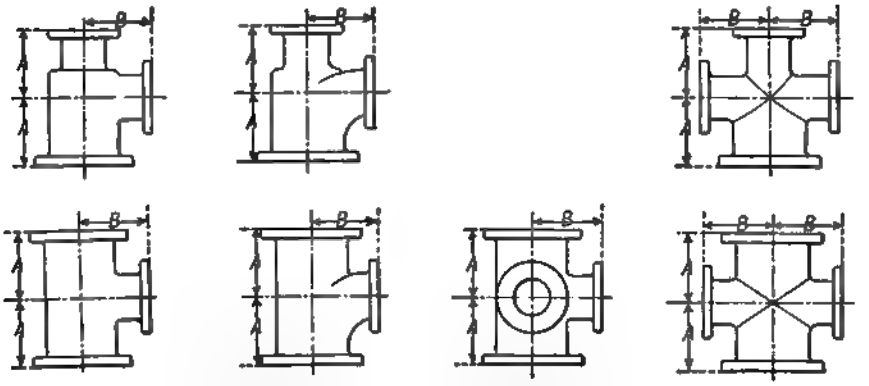

FIG. 11. STANDARD AND EXTRA HEAVY REDUCING FLANGED FITTINGS

TABLE 15

EXTRA HEAVY REDUCING FLANGED FITTINGS

(See Fig. 11)

Short Body Pattern

Size	1	1¼	1½	2	2½	3	3½	4	4½	5	6	7	8	9	10	12	11	15
*Size of Outlets and Smaller	All reducing fittings 1"-9" inclusive have the same center to face dimensions as straight size fittings.														6	8	9	9
AA—Face to Face, Run															18	21	23	23
A—Center to Face, Run															9	10½	11½	11½
B—Center to Face, Outlet															11	12½	14	15

Size	16	18	20	22	24	26	28	30	32	34	36	38	40	42	44	46	48
*Size of Outlets and Smaller	10	12	14	15	16	18	18	20	20	22	24	24	26	28	28	30	32
AA—Face to Face, Run	25	28	31	33	34	38	38	41	41	44	47	47	50	53	53	55	58
A—Center to Face, Run	12½	14	15½	16½	17	19	19	20½	20½	22	23½	23½	25	26½	26½	27½	29
B—Center to Face, Outlet	15½	17	18½	20	21½	23	24	25½	26½	28	29½	30½	31½	33½	34½	35½	37½

*Long body patterns are used when outlets are larger than given in the above table, therefore have same dimensions as straight size fittings.

The dimensions of reducing flanged fittings are always regulated by the reduction of the outlet.

Fittings reducing on the run only, the long body pattern will always be used, except double sweep tees, on which the reduced end (dimension on request) is always longer than the regular fitting.

Bullheads or tees having outlet larger than the run will be the same length center to face of all openings as a tee with all openings of the size of the outlet.

For example, a 12" x 12" x 18" tee will be governed by the dimensions of the 18" long body tee; namely, 16½" center to face of all openings and 33" face to face.

Reducing elbows carry same center to face dimensions as regular elbows of largest straight size.

Special Flanged Fittings. In addition to the standard flanged fittings it is often desirable to make use of *special cast-iron flanged fittings* (Fig. 13) to fit peculiar conditions and save an unnecessary amount of piping. Such fittings are not carried in stock but will be made to order according to detail drawing, giving dimensions called for in outline figures.

TABLE 16

AMERICAN STANDARD

STANDARD FLANGED FITTINGS

General Dimensions—Reducing Laterals. (See Fig. 12.) All Dimensions given in inches

FIG. 12.

Short Body Pattern

TABLE 17

EXTRA HEAVY FLANGED FITTINGS

General Dimensions—Reducing Laterals. (See Fig. 12.) All dimensions given in inches

Short Body Pattern

*Long body patterns are used when branches are larger than given in the above table, therefore have same dimensions as straight size fittings.
The dimensions of reducing flanged fittings are always regulated by the reduction of the branch.
Fittings reducing on the run only, the long body pattern will always be used.

TABLE 18

AMERICAN STANDARD

FLANGED VALVES AND FITTINGS—STANDARD AND LOW PRESSURE

Templates for Drilling

Size, Inches	Diameter of Flanges, Inches	Thickness of Flanges, Inches	Bolt Circle, Inches	Number of Bolts	Size of Bolts, Inches
1	4	7/16	3	4	7/16
1¼	4½	½	3½	4	7/16
1½	5	9/16	3½	4	½
2	6	⅝	4¾	4	⅝
2½	7	11/16	5½	4	⅝
3	7½	¾	6	4	⅝
3½	8½	13/16	7	4	⅝
4	9	15/16	7½	8	⅝
4½	9¼	15/16	7¾	8	¾
5	10	15/16	8½	8	¾
6	11	1	9½	8	¾
7	12½	1 1/16	10¾	8	¾
8	13½	1⅛	11¾	8	¾
9	15	1¼	13½	12	¾
10	16	1 3/16	14¼	12	⅞
12	19	1⅜	17	12	⅞
14	21	1⅜	18¾	12	1
15	22¼	1⅜	20	16	1
16	23½	1 7/16	21¼	16	1
18	25	1 9/16	22¾	16	1⅛
20	27½	1 11/16	25	20	1⅛
22	29½	1 13/16	27¼	20	1¼
24	32	1⅞	29½	20	1¼
26	34¼	2	31¾	24	1¼
28	36½	2 1/16	34	28	1¼
30	38¾	2⅛	36	28	1¼
32	41¼	2¼	38½	28	1½
34	43¾	2 5/16	40½	32	1½
36	46	2⅜	42¾	32	1½
38	48¼	2⅜	45¼	32	1½
40	50¾	2½	47¼	36	1½
42	53	2⅝	49½	36	1½
44	55¼	2⅝	51¾	40	1½
46	57½	2 11/16	53¾	40	1½
48	59½	2¾	56	44	1¾

Flanges for Wrought Pipe. Flanges of cast iron and steel are used for connecting pipes of large diameter, and the principal dimensions, including bolt circle and bolts, are given in Tables 18 and 19. There are in general four standard methods of joining these flanges to the pipe, as shown in Fig. 14, and they are known as: (1) screwed flanges, (2) shrunk flanges, or shrunk and rolled flanges, (3) *Vanstone* joints, plain or reinforced, and (4) welded flanges.

Screwed Flanges. A method of attaching a flange, provided with threads to the end of a pipe provided with threads, by screwing on the flange by machinery until the pipe extends beyond the face of the flange, then swinging pipe in a double-ended lathe and facing off both ends of pipe and at the same time taking a skim off the face of the flanges to insure a true bearing of gasket on end of pipe and parallelism of flanges is shown by *A*, Fig. 14.

This joint is adaptable for medium steam pressures and high water pressures in sizes up to 12″. Manufacturers do not recommend this type of flange in sizes 14″ and larger for high pressures, as practice has proven it to be both unsatisfactory and unsafe.

Shrunk and Rolled Flanges. For pipe sizes 14″ and larger, and for pipe where the thickness of wall of pipe was too light for successful threading, the only practical method of attaching flanges was by riveting or shrinking and peening, as there were no threading facilities capable of taking care of the larger sizes, for many years, except by chasing the threads, which was too expensive for ordinary use.

TABLE 19

AMERICAN STANDARD

FLANGED VALVES AND FITTINGS—EXTRA HEAVY

Templates for Drilling

Size, Inches	Diameter of Flanges, Inches	Thickness of Flanges, Inches	Bolt Circle Inches	Number of Bolts	Size of Bolts, Inches
1	4 1/2	11/16	3 1/4	4	1/2
1 1/4	5	3/4	3 3/4	4	1/2
1 1/2	6	13/16	4 1/2	4	5/8
2	6 1/2	7/8	5	4	5/8
2 1/2	7 1/2	1	5 7/8	4	5/8
3	8 1/4	1 1/8	6 5/8	8	5/8
3 1/2	9	1 3/16	7 1/4	8	5/8
4	10	1 1/4	7 7/8	8	5/8
4 1/2	10 1/2	1 5/16	8 1/2	8	5/8
5	11	1 3/8	9 1/4	8	5/8
6	12 1/2	1 7/16	10 1/4	12	5/8
7	14	1 1/2	11 7/8	12	5/8
8	15	1 5/8	13	12	7/8
9	16 1/4	1 3/4	14	12	1
10	17 1/2	1 7/8	15 1/4	16	1
12	20 1/2	2	17 3/4	16	1 1/8
14	23	2 1/8	20 1/4	20	1 1/8
15	24 1/2	2 3/16	21 1/2	20	1 1/4
16	25 1/2	2 1/4	22 1/2	20	1 1/4
18	28	2 3/8	24 3/4	24	1 1/4
20	30 1/2	2 1/2	27	24	1 3/8
22	33	2 5/8	29 1/4	24	1 1/2
24	36	2 3/4	32	24	1 5/8
26	38 1/4	2 13/16	34 1/2	28	1 5/8
28	40 3/4	2 15/16	37	28	1 5/8
30	43	3	39 1/4	28	1 3/4
32	45 1/4	3 1/8	41 1/2	28	1 7/8
34	47 1/2	3 1/4	43 1/2	28	1 7/8
36	50	3 3/8	46	32	1 7/8
38	52 1/4	3 7/16	48	32	1 7/8
40	54 1/2	3 9/16	50 1/4	36	1 7/8
42	57	3 11/16	52 3/4	36	1 7/8
44	59 1/4	3 3/4	55	36	2
46	61 1/2	3 7/8	57 1/4	40	2
48	65	4	60 3/4	40	2

These drilling templates are in multiples of four, so that fittings may be made to face in any quarter, and bolt holes straddle the center line.

Bolt holes are drilled 1/8 inch larger than nominal diameter of bolts.

These methods have been superseded naturally by the shrunk and rolled joint, whereby the flange is bored out to a shrink fit, then heated and placed on the pipe, after which the pipe is expanded by a large power roller expander until it not only fits the barrel of the flange but the metal of the pipe flows into the corrugations in the hub of the flange not shown, but usually one corrugation in each half of flange. The pipe is then swung in double-ended lathe and both flange and pipe faced off parallel.

This type of joint was used very successfully on high-pressure steam, exhaust and other low-pressure service, but the advent of the *Vanstone* joint has superseded it for high-pressure steam service, as it is a better and safer job, eliminating the chances of leaks between the flange and pipe. Now the shrunk joint is used mostly on exhaust, condenser and water lines.

Vanstone Flanged Joints. This is the only first-class commercial joint which is dependable and requires no attention or renewing beyond an occasional gasket (Fig. 14-*B*).

It is made by rolling over the end of the pipe, in front of the flange, until at right angles to axis of pipe. This lap is then faced on front and edge and acts as bearing for gasket in making the joint. This joint can be used in connection with a flange of a valve or fitting as well as two pieces of pipe. The flanges act merely as two swivelling collars to hold the pipe together, the flanges permitting turning for matching fitting, valve or other flanges in any position.

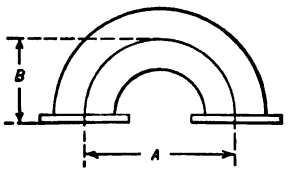

Return Bend.

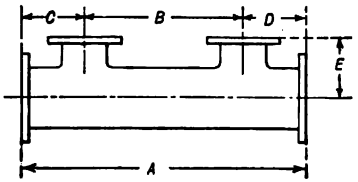

Double Outlet Tee.

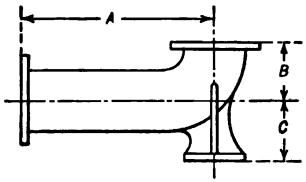

Extension Elbow with Base.

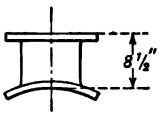

Saddle Nozzle.

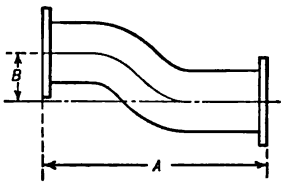

Offset.

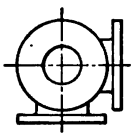

Side Outlet Elbow.

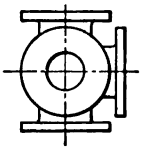

Side Outlet Tee.

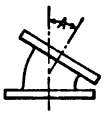

Special Angle Elbow.

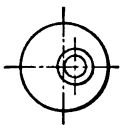

Eccentric Flange

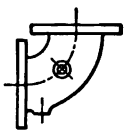

Elbow with Tapped Drain Bosses.

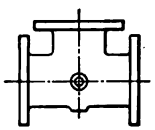

Tee with Tapped Drain Bosses.

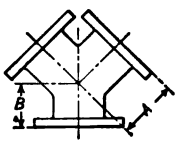

True Y-Branch.

FIG. 13. STANDARD CAST-IRON FLANGED FITTINGS.
Special Patterns. Working Pressure, 150 lb.

NOTE.—See statement in paragraph just preceding Table 16.

The *Vanstone* joint is adaptable for all classes of service, including steam, gas, air and water, for pressures up to 1,000 pounds. It can be furnished, male and female, when required.

Welded Flanges. In making this joint, which is the most expensive of all forms, a forged steel flange is welded to the pipe end and finished true and square as described above (Fig. 14-*C*).

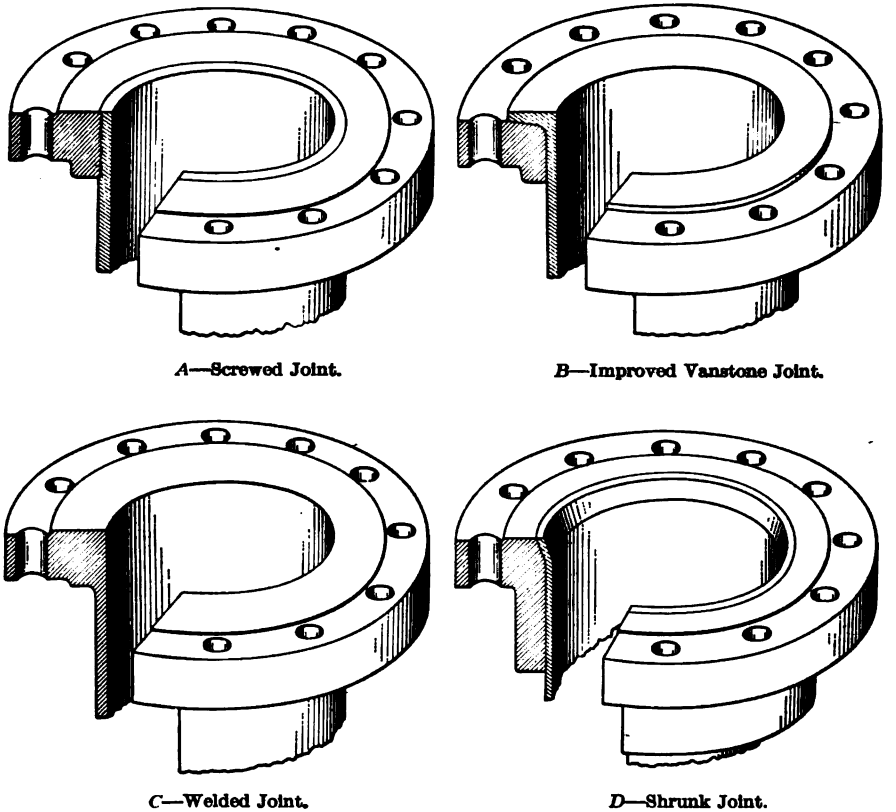

A—Screwed Joint. *B*—Improved Vanstone Joint.

C—Welded Joint. *D*—Shrunk Joint.

FIG. 14. METHODS OF CONNECTING FLANGES TO WROUGHT PIPE.

Crane Company makes the following cost comparison of these four joints as made by them: (1) screwed = $19.00; (2) *Cranelap* (improved *Vanstone*) = $23.00; (3) shrunk joint = $24.00, and (4) *Cranewld* = $34.00.

The following methods of *finishing the flange faces* in order to make a tight joint when the bolts are drawn up are used and described by the above company as follows:

Methods of Facing Flanges. (*a*) Plain straight face; (*b*) raised face smooth finish for gaskets; (*c*) raised face finished for ground joint; (*d*) tongue and groove; (*e*) male and female; (*f*) plain face corrugated; (*g*) plain face scored; (*h*) ball shape for ground joint. See Fig. 15.

"*Plain Straight Face.* This type of joint has the entire face of the flange faced straight across and uses either a full face or ring gasket. It is commonly employed for pressures less than 125 pounds on steam and water lines. The best results are obtained by using a fairly thick gasket, so that the gasket will have sufficient pressure exerted on it by the bolts to make a tight joint before the outside edges of the flanges meet. The full-faced gasket is preferred by some, because it may be installed

more readily, and is more likely to be concentric with the bore of the flange than that of a ring gasket, but it has no further advantages.

A ring gasket, properly proportioned and correctly installed, will make just as tight a joint as a full-faced gasket, at considerably less expense and with less pulling up on the bolts.

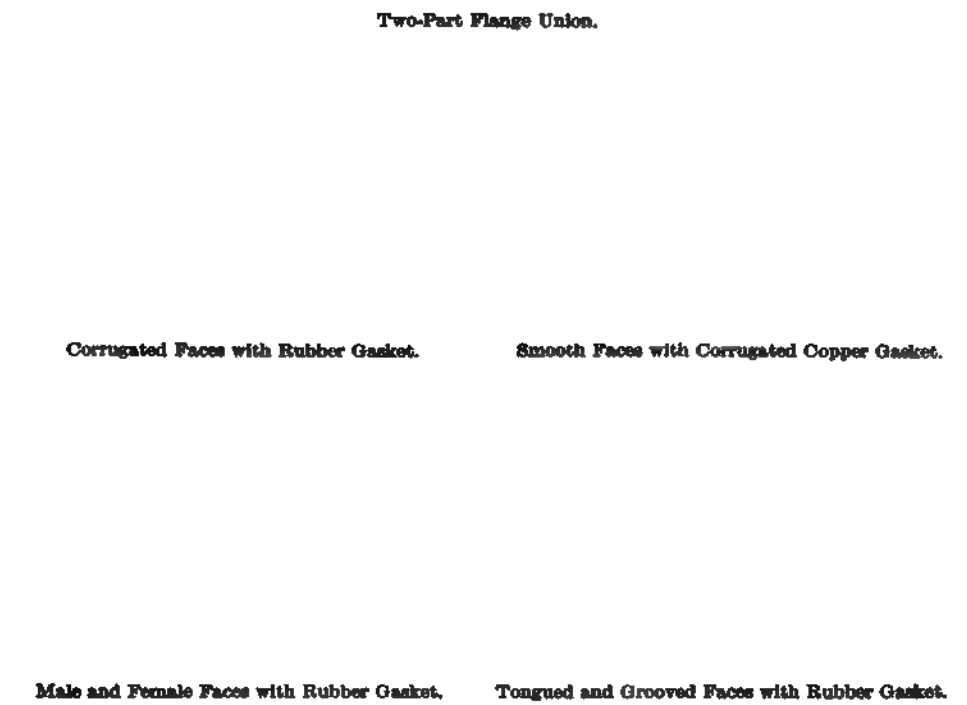

FIG. 15. TYPICAL FLANGE CONNECTIONS.
Facing and Gaskets.

"*Raised Face Smooth Finish for Gaskets.* This type of face is made raising the face of the flange between the bore and inside of the bolt holes, $^1/_{32}$" to $^1/_{16}$" above that of the remainder of the flange.

"This type of joint is most satisfactory on high-pressure steam lines and it is the most general on the market to-day.

"With this style of face ring gaskets are employed, and a greater pressure per square inch of gasket is obtained by pulling up on the bolts than would be obtained with similar bolts on a full-face gasket.

"The raised face prevents the touching of the outside edges of the flanges, and the entire pressure exerted by the bolts is transmitted to the gasket, which gives a maximum efficiency and resistance against leakage.

"*Raised Face Ground Joints.* This style of face is identical with that employed when gaskets are used, excepting that the raised face is ground to an absolute metallic joint. This eliminates the use of gaskets.

"This style of joint was popular before a satisfactory gasket material was found, and was employed considerably on superheated steam lines. There having been placed on the market gaskets which are employed for temperatures as high as 800° F., the successful use of these gaskets has to a considerable degree reduced the number of ground joints used in steam lines.

"*Tongue and Groove Flanges.* This style of joint is very popular. On high-pressure water, gas or air lines the gasket area is reduced to a minimum, thereby increasing the pressure on the gasket further than on any other style of gasket construction. The area of the gasket in this joint is considerably less than would be necessary if the gasket were not protected from blowing outward or squeezing inward, as is the case with unprotected gaskets. The installation of a joint of this kind is more expensive than when raised face is used. The disassembling, for replacing of a valve or fitting, is also expensive unless lines are made so that they may be sprung readily.

"For hydraulic and ammonia lines there is no better joint.

"*Male and Female.* Male and female joints are employed on steam lines having high pressures, and were also employed on hydraulic lines where a cup-shaped gasket was used. They are still being employed for services of this kind, for the reason that the gasket is retained from blowing out, but the width of the gasket is greater than when a tongue and groove is used. This style of joint is as expensive to install and disassemble as a tongue and groove joint.

"*Plain Face Corrugated Joints.* This style of joint is nothing more than a plain face straight flange upon which concentric curves have been cut with a round-nosed tool. On some types of installations a face of this kind is necessary, as the corrugations have a tendency to prevent the gaskets from blowing out, particularly when the flow in the pipe line is of a nature which requires the use of exceptionally thick gaskets.

"*Plain Face Scored.* This type of joint is made by using a plain straight flange with scores upon the face consisting of concentric rings made with a diamond-pointed tool. On oil or acid lines, where the gaskets must be of lead, a joint of this kind gives the best satisfaction, as the lead gasket squeezes into the scores and assists in maintaining a tight joint without any undue strain on the bolts and flanges.

"*Ball-Shaped Flanges for Ground Joints.* The use of flanges having inserted parts and non-corrosive rings is increasing every year. This is due to the fact that screwed unions of this type are being made to this construction.

"The success of these types of unions has induced manufacturers to make flange unions of similar construction. The elimination of the gasket is construed by many engineers as an improvement. The ball joint allows a reasonable misalignment of the piping, thereby reducing the breakage of flanges due to that cause to a minimum. In high-class installations where the faces of the flanges are machined with the axis of the pipe, a ball-joint union would be of no advantage, but in cases where there is considerable settlement of the building or other misalignment in the piping this style of face meets with considerable success."

TABLE 20

REINFORCED VANSTONE JOINTS

(See Fig. 16)

Pipe Size, In.	*D* In.	*T* In.	*T'* In.	Pipe Size, In.	*D* In.	*T* In.	*T'* In.	Pipe Size, In.	*D* In.	*T* In.	*T'* In.
4	4 1/2	1/4	5/16	9	9 5/8	3/8	11/16	15	15	3/4	1/2
5	5 9/16	1/4	3/8	10	10 3/4	3/8	1/2	16	16	3/4	1/2
6	6 5/8	9/32	13/32	12	12 3/4	3/8	1/2	18	18	3/4	1/2
7	7 5/8	5/16	7/16	14	14	3/8	1/2	20	20	3/4	1/2
8	8 5/8	11/32	7/16								

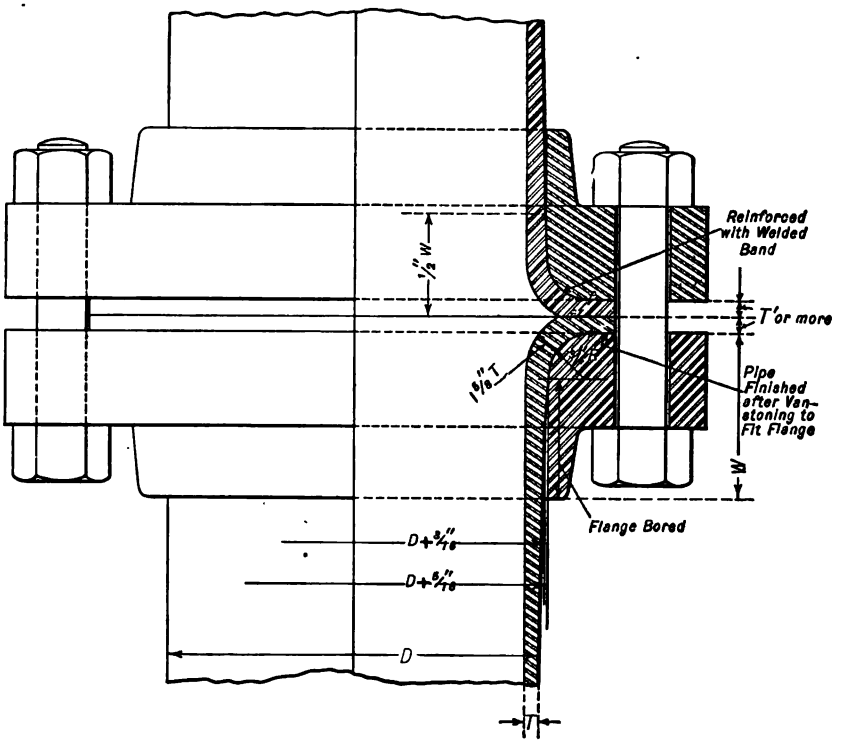

FIG. 16. REINFORCED VANSTONE FLANGED JOINT. (*M. W. Kellogg Co.*)

(See Table 20.)

VALVES

Commercial valves, like fittings, are usually either made with *screwed* or *threaded ends*, or else are *flanged* for bolted connection to corresponding flanges on the pipe or fitting, in which case the flange and bolting arrangement should conform with the *American Standard* for flanged fittings.

Materials Used in Valves. The material used for valves of small size is generally *brass*, but in the larger sizes either *cast iron*, *cast steel* or some of the *steel alloys* are employed. Practically all iron or steel valves intended for steam or water work are brass-mounted or trimmed, while valves for acids, ammonia and corrosive gases are of iron throughout.

Pressure Requirement. Valves for *general service* are generally designed for *standard* or *extra heavy* service, the former being used up to 125 lb. and the latter up to 250 lb. steam working pressure, although most manufacturers also make a valve for *low pressure* up to 25 lb. steam and for *medium pressure* up to 175 lb. steam working pressure. In practically all cases these valves are tested at a cold-water pressure of twice the steam pressure, and may be used on water lines with a pressure 40 per cent in excess of the allowable rated steam pressure. Some manufacturers rate their standard valves at 150 lb. steam working pressure instead of 125 lb. as stated above.

In addition to valves for general service there are valves for special service requirements, such as heating systems which are used only on low pressures and are often made of special shape as shown in Figs. 29 to 31.

Types of Valves. The types of valves commercially available are almost unlimited, as practically every requirement for controlling the flow of water, steam or gas has been met in the design of some sort of valve especially adapted to the service in question. Only the more common types are considered here, such as *gate valves* or straightway valves, *globe valves, angle valves, check valves,* and a few *automatic valves,* such as *reducing* and *back-pressure* valves.

FIG. 17. IRON-BODY GATE VALVE WITH RENEWABLE SEAT RINGS.

FIG. 18. ALL-BRASS GATE VALVE WITH UNION BONNET.

FIG. 19. SPLIT WEDGE.

Gate Valves. The gate valve (Figs. 17 and 18) is probably the most commonly used of all valves, and is to be desired in all cases except those in which a throttling action is necessary, when a globe or angle valve may be required. These valves are made in sizes from 2″ to 12″ with screwed ends, and from 2″ to 30″ with flanged ends, using *cast-iron* body, bonnet and wedge, or discs, but are *brass- or bronze-mounted* with removable seats, disc rings, and stems.

TABLE 21

DIMENSIONS OF GATE VALVES

Inside Screw, Outside Screw and Yoke, Iron Body, Brass-Mounted

125 and 25 Pounds Steam Working Pressures

(Best Mfg. Co.)

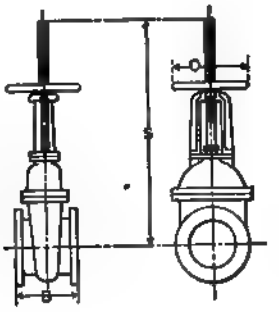

125 Pounds Pressure												25 Pounds Pressure				
Size	B	K	N	S	O	Size	B	N	S	O	Size	B	N	S	O
2	7	5 7/16	11 3/4	14	6 1/2	16	16	42 3/4	74 3/4	22	12	11	32 1/2	55	16
2 1/2	7 1/2	5 1/2	12 3/4	15 1/4	6 1/2	18	17	48 3/4	86	24	14	13 1/2	36 1/4	62 1/2	16
3	8	6 1/2	14 1/2	18 1/2	7 1/2	20	18	52 1/2	91	24	16	14	41	71 1/2	18
3 1/2	8 1/2	6 1/2	15 1/2	20 3/4	7 1/2	22	19	55 1/2	100	27	18	14 1/2	44 3/4	79 3/4	18
4	9	6 1/2	16 1/4	23 1/2	9	24	20	62	109	30	20	15 1/2	48 3/4	87 1/2	20
4 1/2	9 1/2	7 1/4	17 3/8	24 3/4	9	26	23	65 1/2	117 1/2	30	22	16 1/4	52 1/2	94 1/2	20
5	10	7 9/16	19	28	10	28	26	70	125	36	24	17	56 1/2	103 1/4	22
6	10 1/2	7 3/4	20 3/4	31 3/4	12	30	30	75 1/2	133	36	26	18 1/2	61 1/2	112	22
7	11	8 1/2	22	37 1/4	12	36	36	88	158 1/2	42	28	20	65 1/2	122 1/4	24
8	11 1/2	8 11/16	26	41	14						30	21	68 1/2	128 1/2	24
9	12	9 1/4	28	44 1/2	14						36	24	81 1/2	151 1/2	30
10	13	9 1/2	30 1/4	49 1/2	16						42	27	94	178	36
12	14	11 1/4	35 1/4	57 1/4	18						48	30	111 3/4	204	48
14	15	.....	39 1/4	66 1/2	20						54	33	127 1/2	236	*
15	15	.....	41 1/2	69 3/4	20						60	36	138 1/4	258	*
											66 72	Dimensions on Application			

* Geared.

For diameter, drilling, and thickness of flanges, see standard flanges.

These valves may have either a *rising or non-rising spindle* and are usually provided with a yoke for guiding the spindle when same is of the rising type. If of the non-rising type (Fig. 17), then the spindle must turn and screw into the wedge nut as the wheel is revolved, in which case it is not apparent to the eye whether the valve is shut or open. The wedge may be of the *solid*, or the double or *split* type, and should always be designed with a slight taper so that it will close tight against the tapered seats, which are usually furnished with renewable seat rings. The solid wedge or split discs should not drag over the seats in opening or closing, but move straight up or down to avoid scoring. The top of the wedge should seat against the bonnet when the valve is wide open so that it may be packed at the spindle stuffing-box while open and under pressure.

Dimensions of iron-body, brass-mounted gate valves are given in Tables 21 and 22.

All-brass gate valves are made in sizes from ¼″ to 3″ in diameter, and generally have screwed ends as shown in Fig. 18, in which the bonnet *A* is secured to the body of the valve by the union nut *a*. The spindle *D* passes through the stuffing-box, which is made tight by the nut *P* and

TABLE 22

DIMENSIONS OF GATE VALVES

Inside Screw, Outside Screw and Yoke, Iron Body, Brass-Mounted

175 and 250 Pounds Steam Working Pressures

(Best Mfg. Co.)

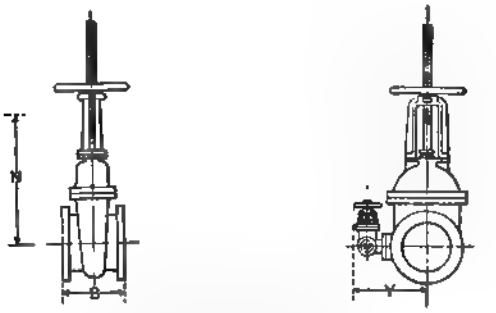

175 Pounds Pressure							250 Pounds Pressure						
Size	*B*	*K*	*N*	*S*	*O*	*Y*	Size	*B*	*K*	*N*	*S*	*O*	*Y*
2	7½	5½	11⅝	14	6½	.	2	8½	7	10⅝	13¾	6½	.
2½	8	6	12⅝	15½	6½	....	2½	9½	8	12⅞	16	7½	....
3	9½	7¼	14 3/16	18⅜	7½	....	3	11⅛	9	14⅝	19½	10	....
3½	10	7⅞	14¾	20½	7½	....	3½	11⅞	10	15½	22	10	....
4	10½	7¾	16¼	23¾	9	....	4	12	11	17¾	24½	12	....
4½	11	8¼	17	25	9	....	4½	13¼	12¼	18¼	27	12	.
5	11½	8½	19	28⅛	10	....	5	15	13½	20¼	29⅛	14	12⅝
6	12	8¾	21⅛	31⅞	12	14⅝	6	15⅞	15⅛	23	34⅛	16	13
7	12½	9¼	22⅞	35⅝	12	15⅜	7	16¼	16¼	24¾	38	16	14⅜
8	13½	10	25¼	40¾	14	15⅞	8	16½	16½	28¼	42¾	20	15⅞
9	14	10¾	27½	44¼	14	16 9/16	9	17	17	30½	47	20	16⅜
10	15	11½	30⅛	49⅝	16	17⅜	10	18	18	33¾	52¾	22	16¾
12	16	12½	33⅝	56⅞	18	18⅝	12	19¾	....	37¼	60	22	19⅛
14	18	..	38½	64½	20	19⅝	14	22½	. ..	42¾	67⅝	24	20⅜
15	18¾	.. .	41	68¾	20	20½	15	22½	...	42¾	67⅝	24	20⅝
16	19½	....	44¾	74½	22	22⅝	16	24	.	...	75⅛	27	25¼
18	21	.. .	47⅛	82¼	24	24¼	18	26	..	...	82½	30	26⅛
20	22½	....	51⅞	90¾	24	27 9/16	20	28	...	....	91½	30	30½
22	24	.. .	55¾	98⅝	27	28 9/16	22	29½	.	.	101	36	32¼
24	25½	..	59⅛	107	30	30½	24	31	....	....	109	36	33
26	29½	....	....	118	36	33	26	36	.	..	118	42	35
28	33½	..	. .	125	36	36	28	41	....	....	125	42	38
30	37½	....	....	133	36	39	30	45	.	.	133	42	41

For diameter, drilling, and thickness of flanges, see standard flanges.

follower *G* which bears against the packing. The wheel *W* is secured by nut *T* to the top of the spindle, and the shoulder *C* and hub at the lower end turn in the split wedge V-V_1, which seats against the tapered faces at *O*. The finished face *D'* back seats at *H*, when valve is wide open so that it may be packed under pressure.

Globe, Angle, and Cross Valves. Globe, angle, and cross valves, like gate valves, are made with *iron bodies* and are usually *brass-mounted*. The principal dimensions are given in Table 23, and it will be noted (Fig. 20) that in all cases a yoke is used for guiding the spindle, which is of the *rising* type, and designed to send the valve disc to its seat against the full line pressure, which should always be on the under side of the disc when the valve is closed. The wheel of this valve is usually fastened to the spindle with a nut as shown, and moves up and down with it, making it necessary to allow ample clearance for the entire wheel. It will be noted that the seat is re-

TABLE 23

DIMENSIONS OF GLOBE, ANGLE, CROSS, AND CHECK VALVES

Iron Body, Brass-Mounted

125 and 250 Pounds Steam Working Pressures

(*Best Mfg. Co.*)

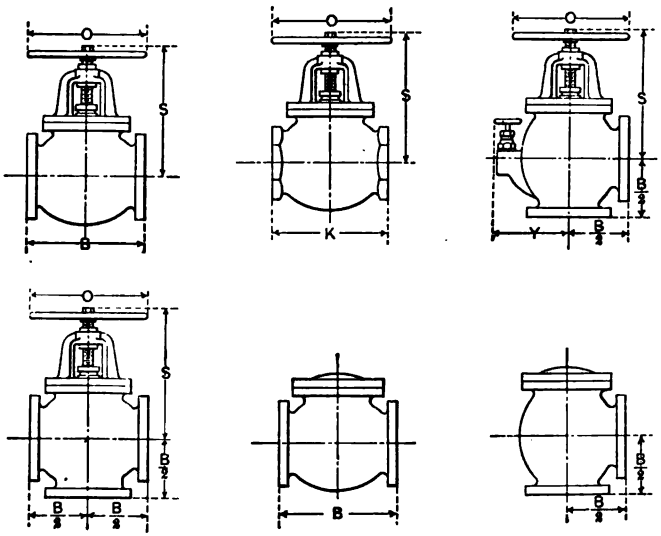

125 Pounds Pressure						250 Pounds Pressure						
Size	*B*	*B* / 2	*K*	*S* / Open	*O*	Size	*B*	*B* / 2	*K*	*S* / Open	*O*	*Y*	Size of By-pass
2	8	4	5¾	10¾	6½	2	10½	5¼	9½	13¾	7½	....	...
2½	8½	4¼	6⅝	11¼	6½	2½	11½	5¾	10¾	14½	10	....	...
3	9½	4¾	7½	12¾	7½	3	12½	6¼	11¾	17½	10	....	...
3½	10½	5¼	8¼	13	7½	3½	13¼	6⅝	12¼	17½	10	....	...
4	11	5½	9⅝	15¼	9	4	14	7	13	19½	14	....	...
4½	12	6	10¼	15¼	9	4½	15	7½	14	19½	14	....	...
5	13	6½	11¼	17¼	10	5	15¾	7⅞	15	21½	16	....	...
6	14	7	12½	19	12	6	17½	8¾	16½	25	18	....	...
7	16	8	14	20½	14	7	19¼	9⅝	18¼	26¼	20	....	...
8	17	8½	16	23¾	16	8	21	10½	20	29½	24	12⅛	1½
10	20	10	18¾	28	18	10	24½	12¼	23¼	33½	27	14¼	1½
12	24	12	22	34	20	12	28	14	....	39	30	16⅜	2
14	28	14	....	38½	24	14	33	16½	....	42	36	18	2
15	30	15	....	38½	24	15	33	16½	....	42	36	18	2
16	32	16	....	41½	27								

For diameter, drilling, and thickness of flanges, see standard flanges.

movable, and the valve disc has an extended spindle moving in a suitable guide, formed by three ribs.

All-brass globe, angle, and *cross valves* are made in sizes from ⅛″ to 4″ diameter and generally have screwed ends as shown in Fig. 21. Like the all-brass gate valve, the valve shown is a *Powell White Star* valve with union bonnet, and has a removable disc holder *H* held in place by pin at *P*. The composition disc *V* is secured by nut *S* and may be readily replaced whenever it becomes worn.

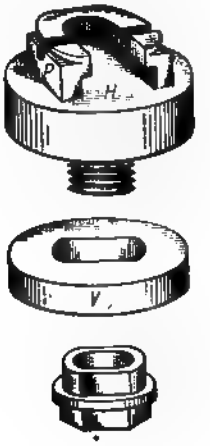

FIG. 21c

FIG. 20. IRON-BODY GLOBE VALVE—BRASS-MOUNTED.

FIG. 21. SECTION OF ALL-BRASS GLOBE VALVE WITH RENEWABLE DISC.

FIG. 22. SWING CHECK VALVE.

FIG. 21b. EXTERIOR VIEW. (*Powell White Star.*)

FIG. 23. LIFT CHECK VALVE.

Automatic Valves. Automatic valves include many varieties, and, in fact, practically any valve may be made automatic by the attachment of the necessary weighted levers, springs, or pressure diaphragms.

Check Valves. The simplest of all automatic valves is, of course, the check valve, which opens whenever the unbalanced pressure below the valve is sufficient to lift it and closes when this pressure fails or flow starts in the opposite direction. These valves may be either hinged to swing as in Fig. 22, where provision is made for regrinding by removing the small plug directly in line with the axis of the valve; or a dead weight disc, moving vertically, may be used as in

FIG. 24. PRESSURE-REDUCING VALVE MONASH CLASS C-1.

Fig. 23, where a reversible disc is shown. The valve in Fig. 22 can also be used in a vertical line, while the one in Fig. 23 cannot.

Pressure-Reducing Valves. The reducing valves, which are very largely used in heating work whenever steam is generated at high pressure and then used at low pressure in the radiators, are either of the diaphragm and weighted lever type (Fig. 24), or else use a compression spring in place of the weight and lever. A large diaphragm is necessary whenever a reduced pressure of 10 lb. or less is to be maintained.

When the reduced pressure is above 10 lb. it is usually possible to use a piston moving in a cylinder cast integrally with and opening into the low-pressure side of the valve. The reduced pressure, operating on this piston, acts to close the valve in opposition to a weighted lever or spring which tends to open the valve.

The *Monash* reducing valve shown in Fig. 24 has the inlet smaller than the outlet, and

uses a double or balanced valve which overcomes the tendency of the high-pressure steam to either blow a single valve open or force it closed. This valve moves up or down under the influence of the low or reduced pressure steam, which acts upon under side of the diaphragm attached to the bottom of the valve spindle. Connection to this chamber is made by the small pipe shown at the bottom of the figure. This connection must be made to the low-pressure main at least 15 ft. from the valve if steady operation is to be secured. By proper adjustment of the two weights on the lever bar, any desired low pressure up to 10 lb. is readily secured and automatically maintained. If no steam is allowed to enter the line leading to the under side of the diaphragm the

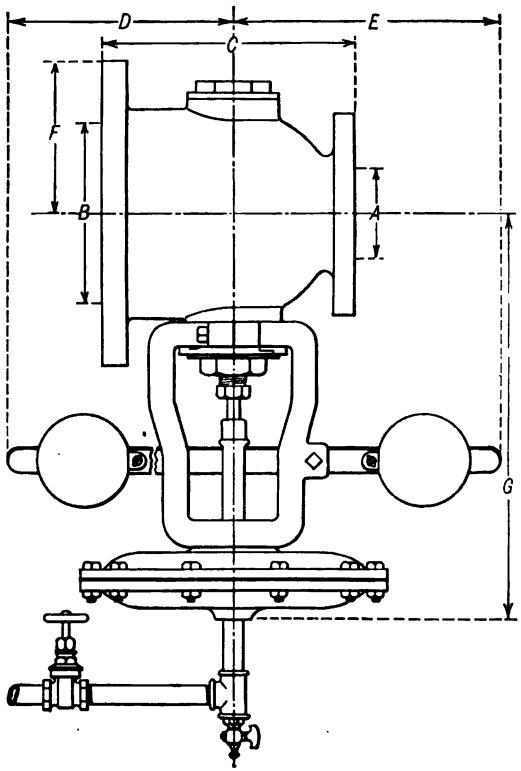

TABLE 24

MONASH CLASS C-1 PRESSURE-REGULATING VALVES

ALL DIMENSIONS GIVEN IN INCHES

	1¼x2½	1½ x 3	2 x 4	2½ x 5	3 x 6	3½ x 7	4 x 6	4 x 8	5 x 10	6 x 12	8 x 14	8 x 16
A	1¼	1½	2	2½	3	3½	4	4	5	6	8	8
B	2½	3	4	5	6	7	6	8	10	12	14	16
C	6⅜	7⅛	8 5/16	9	10¼	10¾	10 7/16	11⅛	13½	15	17 9/16	17⅝
D	12½	12½	13 3/16	15⅛	17	18 9/16	17	20 1/16	21 3/16	23⅛	27	27
E	15½	15½	16 9/16	17⅝	19	20 7/16	19	21 7/16	23 9/16	24⅞	33	33
F	3½	3 3/4	4 1/16	5	5½	6¼	5½	6 3/4	8	9½	10½	11¾
G	13⅜	14⅝	15 1/16	16½	16 13/16	17 13/16	16 13/16	18 7/16	20⅝	21 5/16	23⅝	23⅝

NOTE.—Sizes up to and including 2 x 4 inch are made with screwed inlet and flanged outlet. All larger valves have both ends flanged. For 125 lb. steam working pressure and not over 10 lb. reduced pressure.

FIG. 25. COCHRANE MULTIPORT SAFETY EXHAUST OR BACK-PRESSURE VALVE.

FIG. 25a. APPLICATION OF COCHRANE SAFETY EXHAUST VALVE.

valve will remain wide open under the influence of the weighted lever, and will pass high-pressure steam like any other valve. The valve shown is designed for 125 lb. working pressure.

Back-Pressure and Non-Return Valves.* There are a great variety of automatic valves which act as *back-pressure* or *non-return* valves (1) to prevent the return of steam or water through them or (2) to maintain a certain predetermined pressure before they will open and relieve a dangerous or undesirable pressure which might develop in the system.

The *Cochrane Multiport* safety exhaust or back-pressure valve (Figs. 25 and 25*a*) is the most improved type of relief valve now on the market. It is so designed as to permit of the closest regulation of the back pressure which is to be maintained. All springs are under the control of a single pressure plate, which is operated by gears as shown by means of an exterior hand wheel. Each valve is equipped with dash-pot on guides so that it will not slam in closing and will travel straight and true in order to give an even bearing over its seat.

Such valves may act merely as weighted check valves or back-pressure valves, or they may be of the gate or globe type, and combine the automatic or self-closing feature with the positive closing feature of ordinary stop valves.

A valve of this sort, known as the *Erwood Swing-Gate*, intended primarily for service on exhaust-steam connections, although applicable for non-return service between a boiler and steam header, is shown in Fig. 26, and its application illustrated in Fig. 26*a*. The gate of this valve is held to its seat by an adjustable external spring, operating on a pivoted lever arm, the axis of which passes through the body of the valve and holds the valve against its seat under whatever pressure may be desired. The steam pressure operates on the other side of the gate, causing it to swing open, unless the pressure is insufficient, or unless a reversal in flow occurs, as in the case of the failure of one of a battery of boilers, when flow from the header into the ruptured boiler would be cut off. This valve may be installed in any position and operated at any angle, but, of course, must be used only as a one-way valve.

FIG. 26. INTERIOR OF THE ERWOOD SWING-GATE VALVE. THE DOTTED LINES SHOW THE SWING-GATE PARTLY OPEN.

In service (Fig. 26*a*) the valve is used as at *A* to prevent an open heater or receiver from flooding the engine, and again, as at *B*, on the atmospheric exhaust line from the heater, to maintain a slight back pressure on the system and supply steam for heating through the line *C*.

Blow-off Valves and Cocks. Special valves or cocks must be used on certain lines such as blow-off lines from power boilers, where the nature of the service rather than the pressure determines the type of valve to be used. A *blow-off valve* (Fig. 27) made by the *Lunkenheimer Co.*, and typical of this class, illustrates the development of this sort of equipment providing for all contingencies and probable replacements, as a consideration of its features will indicate. The plug fits snugly in a separate and easily removable bronze casing, which can be readily replaced when worn. Any accumulation of scale or sediment that might remain on the seat before the disc

* NOTE.—For a more detailed description of automatic non-return valves and their application see the Chapter on "Power Plant Piping."

is brought in contact with same is washed off by the water which passes around the plug when seating. It will be seen that the plug *C* carries a reversible, double-faced disc *D*, secured to the plug by a stud and nut. This plug is guided perfectly in the valve body. The bronze seat ring is screwed into a second brass ring *F*, the object being to make it possible to renew the seat ring very easily when worn. At the back of the valve is a plug *B*, the use of which is to permit the introduction of a rod to clean out the blow-off pipe when desirable. The stem which raises and lowers the disc is held in place by lock-nut which is prevented from unscrewing by a non-rotating washer. The threads of the stem operate within the bronze bushing in the top of the yoke, which bushing can easily be removed.

Ordinary *plug cocks* (Fig. 28) on blow-off lines

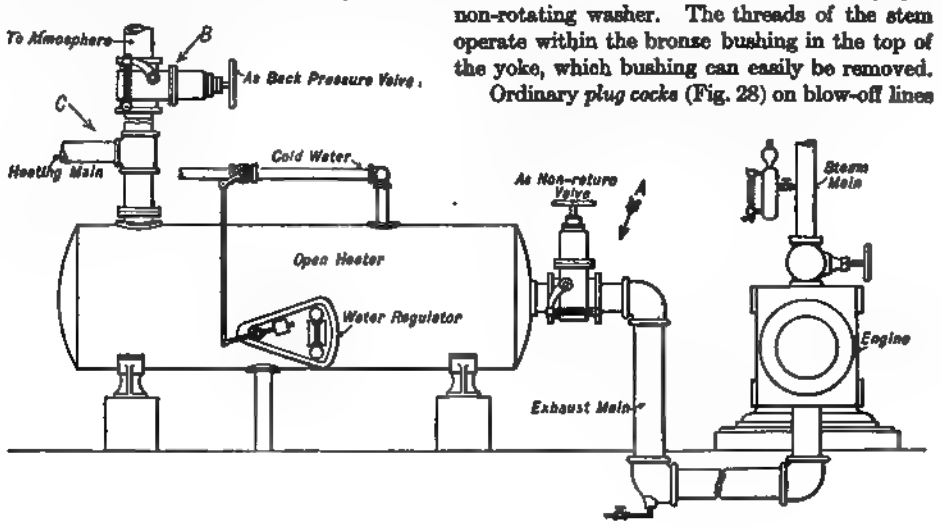

FIG. 26a. APPLICATION OF ERWOOD SWING-GATE VALVE.

FIG. 27. BLOW-OFF VALVE.
(*Lunkenheimer.*)

FIG. 28. PLUG COCK.
(Asbestos Packed.)

are satisfactory for low-pressure heating work, and specially designed cocks or *asbestos-packed cocks* are often used on high-pressure blow-off lines. These cocks open and close with a quarter turn.

General Practice Concerning Valves. The experience of the *Babcock & Wilcox Co.* has led them to observe the following practice in the use of valves on boiler-room piping:

"*Valves.* For 150 pounds working pressure, saturated steam, all valves 2 inches and under may have screwed ends; 2½ inches and over should be flanged. All high-pressure steam valves 6 inches and over should have suitable by-passes. All valves for use with superheated steam should be of special construction. For pressures above 160 pounds, where the superheat does not exceed 70 degrees, valve bodies, caps and yokes are sometimes made of cast iron, though ordinarily semi-steel will give better satisfaction. The spindles of such valves should be of bronze, and there should be special necks with condensing chambers to prevent the superheated steam from blowing through the packing. For pressures over 160 pounds and degrees of superheat above 70, all valves 3 inches and over should have valve bodies, caps, and yokes of steel castings. Spindles should be of some non-corrosive metal, such as '*Monel* metal.' Seat rings should be removable of the same non-corrosive metal, as should the spindle seats and plug faces.

"All salt-water valves should have bronze spindles, sleeves, and packing seats.

"Automatic stop and check valves are coming into general use with boilers, and such use is compulsory under the boiler regulations of certain communities. Where used, they should be preferably placed directly on the boiler nozzle. Where two or more boilers are on one line, in addition to the valve at the boiler, whether this be an automatic valve or a gate valve, there should be an additional gate valve on each boiler branch at the main steam header.

"Relief valves should be furnished at the discharge side of each feed pump and on the discharge side of each feed-water heater of the closed type.

"*Feed Lines.* Feed lines should in all instances be made of extra strong pipe due to the corrosive action of hot feed water. In some instances, wrought-steel and *Vanstone* joints have been used in feed lines, and this undoubtedly is better practice than the use of cast-steel threaded work, though the additional cost is not warranted in all stations.

"Feed valves should always be of the globe pattern. A gate valve cannot be closely regulated and often clatters owing to the pulsations of the feed pump.

"*Gaskets.* For steam and water lines where the pressure does not exceed 160 pounds, wire insertion rubber gaskets 1/16 inch thick will be found to give good service. For low-pressure lines, canvas insertion black rubber gaskets are ordinarily used. For oil lines, special gaskets are necessary.

"For pressure above 160 pounds carrying superheated steam, corrugated steel gaskets extending the full available diameter inside of the bolt holes give good satisfaction. For high-pressure water lines wire-inserted rubber gaskets are used, and for low-pressure flanged joints canvas-inserted rubber gaskets are employed."

Identification of Valves. A *directory of valves* or a proper *means of identification* of the lines controlled by them should be required in all systems wherein any possibility of confusion as to which valve to operate to affect a certain line may arise.

Valves for Heating Service. A special class of valves is required for controlling steam and water radiators and they are briefly considered here. These valves are of brass, usually of the angle type, modified to suit the service requirements, and are often arranged with graduated heads and lever handles in order to indicate the relative opening of the valve port in any position.

Steam Radiator Valves. The most common type of steam radiator valve is the *angle pattern* (Fig. 29), equipped with wood wheel, ball-joint union, and removable composition disc. These valves range in size from ½" to 2", and may be furnished with or without the union connection, which in general should always be specified, as it facilitates disconnection. In addition to the *direct angle pattern*, this valve may be obtained in the *corner* or *offset corner* pattern (Fig. 30), as well as in the *straight offset* or *offset globe* pattern. Dimensions of the angle and offset corner valves are given in Table 25, and the advantages of the corner and offset patterns will be at once apparent in simplifying radiator connections.

Hot-Water Radiator Valves. The above valves* may be used for hot-water heating ser-

*NOTE.—When these valves are used on forced hot-water work it is not customary to drill a circulation hole in same. For hot-water service a follower is always supplied for securing the packing in the stuffing-box.

vice by drilling a $^1/_{16}$" diameter hole through the web forming the seat so as to permit sufficient circulation to take place to prevent freezing when valve is closed. A much simpler form of hot-water radiator valve, of the *butterfly type*, is manufactured and serves the purpose of controlling the flow, although it does not close perfectly water-tight.

The *quick-opening* (Q.-O.) *hot-water radiator valve* (Fig. 31), in which a quarter turn of the handle revolves a cylindrical or conical shell so that the port through same registers with

FIG. 30. OFFSET CORNER VALVE WITH MALE UNION, RIGHT HAND.

FIG. 29. STEAM RADIATOR VALVE—ANGLE PATTERN (*Jenkins Bros.*).

Description of Parts.

1. Wheel	6. Disc	11. Union Nut
2. Lock Nut	7. Waste Nut	12. Union Nipple
3. Spindle	8. Wheel Nut	13. Bottom Plate
4. Bonnet	9. Disc Nut	14. Wood Wheel
5. Disc Holder	10. Body	15. Top Plate

FIG. 31. QUICK-OPENING HOT WATER RADIATOR VALVE.

an opening in the valve body, is more generally used on water work than the butterfly type of valve referred to above. The valve shown has a conical shell and globe-shaped body, which helps materially to do away with the sticking of the shell, since only a small portion of the shell comes in contact with the body at the top and bottom, and at a narrow vertical strip on either side where a gate is formed for closing the waterway. The tapering shell permits taking up of any wear which may occur in the valve. The spring in the bonnet or neck of the valve holds the conical shell up to its seat, and at the same time exerts a

downward pressure on the small rubber washer which is slipped over the stem and held within the chamber in the cap of the valve. The pressure of the spring expands the rubber gasket so as to provide a self-packing feature.

TABLE 25

DIMENSIONS OF JENKINS BROS. ANGLE AND OFFSET CORNER RADIATOR VALVES

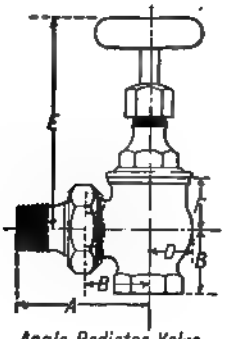

Angle Radiator Valve *Offset Corner Valves*

Size. Angle Type	½	¾	1	1¼	1½	2	2½	3
A—Center to end of union	2 11/16	3 1/16	3 5/8	4	4 1/16	4 3/8	5 1/16	6 1/16
B—Center to face, screwed end	1 1/2	1 3/4	1 13/16	2 1/16	2 1/16	2 11/16	3 1/4	4 1/16
D—Radius of body	1/2	1 1/16	1 1/4	1 1/2	1 3/4	2 1/4	2 11/16	3 1/16
E—Center of outlet to top of hand wheel	4 3/4	5 1/2	5 1/2	6 1/2	7	8	9	9 1/2
F—Center to top of body	1	1 1/16	1 1/16	1 1/2	1 11/16	2 1/16	2 5/16	2 5/8

Size. Offset Corner Type	½	¾	1	1¼	1½	2
A—Center to end of union	3	3 1/16	3 3/4	4 1/16	4 11/16	5 1/16
B—Center to face, screwed end	1 1/2	1 3/4	2	2 1/16	2 5/16	3 1/16
C—Center of outlet to center of inlet	3/4	1	1 1/16	1 1/16	1 1/2	1 11/16
D—Radius of body	1/2	1 1/16	1 1/4	1 1/2	1 3/4	2 5/16
E—Center of outlet to top of hand wheel	4 1/2	5	5 1/2	6 1/2	7	7 1/2
F—Center of outlet to top of body	1/2	1 1/16	1 1/16	1 1/16	1 1/16	2 1/16

NOTE.—Dimensions of offset globe same as offset corner valves. Regular corner valves have no offset. Other dimensions are same as given in table for offset corner valves.

Inlet

FIG. 32. MONASH PLUG TRAP.

This valve is made in sizes from ½" to 2" either with or without union as shown in Fig. 32, and should always be connected with bottom inlet and side outlet.

Automatic Air Valves and Traps. The use of automatic air valves on steam radiators, mains, trap-tanks, heaters, etc., has resulted in the development of an endless variety of these devices, of which only a few typical examples can be considered. See Chapter on "Direct Steam Heating," Volume I.

The *automatic-expansion-post type* of steam air valve may be of either the solid or hollow post construction. The former (Fig. 32) has a solid composition plug which expands when surrounded by steam, thus closing the inlet and preventing its escape. If air or water enter the trap or valve, contraction of the plug takes place and the valve remains open

FIG. 33. MONASH AIR VALVE. FIG. 34. BRECKENRIDGE AIR VALVE FOR STEAM MAINS.

until steam again enters. The plug is mounted in an adjustable brass head which may be readily adjusted with a screw-driver after removing the cap. The hollow plug valve (Fig. 33) has an adjustable seat (4), which is capable of slight movement against the spring (3), so that when steam enters through (1) there is no danger of buckling the expansion post or plug if not properly adjusted as to length and steam temperature. The entire seat housing is further adjustable by screw-driver upon removing cap (5). Both of these valves discharge water as well as air.

A modification of the expansion-post type of air valve is shown in the *Breckenridge* air valve (Fig. 34), in which a curved brass strip B in expanding pulls a small conical valve V against its seat, and prevents the escape of steam entering the chamber C, which contains the expansion element B. If air enters this same chamber the small valve V is moved to the right as the piece of spring brass contracts and the port is opened to the discharge line L connected to the small valve housing. Steam, air, and water enter at I, and air and water escape at O. The small valve may be readily adjusted by removing the protecting plug in its housing.

Especially perfected automatic steam radiator air valves for use in finished rooms have been devised to discharge only air, and prevent the escape of steam and water, and are considered in Volume I in the Chapter on "Direct Steam Heating."

Compression Cocks. Ordinary brass compression cocks (Figs. 35*a* and 35*b*) of ⅛" or ¼" size are generally found more satisfactory for use in hot-water systems than the automatic type of air valve. These cocks may be operated by nut and key, or preferably by a hardwood wheel, and, of course, can also be used for venting steam radiators and lines, where manual control of the air valves is satisfactory.

Finishes for Brass Valves. There are *five standard finishes* for all-brass radiator valves, as well as all-brass valves for general service. The methods of finishing these valves are: (1) rough body with finished trimmings, (2) finished all over, (3) rough body, with nickel-plated trimmings, (4) rough body with finished trimmings and plated all over and (5) finished and plated all over. For most interior work in finished rooms the finish specified is similar to number (4), while in unfinished rooms or basements number (1) is satisfactory. These are the two cheapest finishes to be had. Radiator control valves are usually fitted with hardwood wheels or handles, while valves on mains have iron wheels.

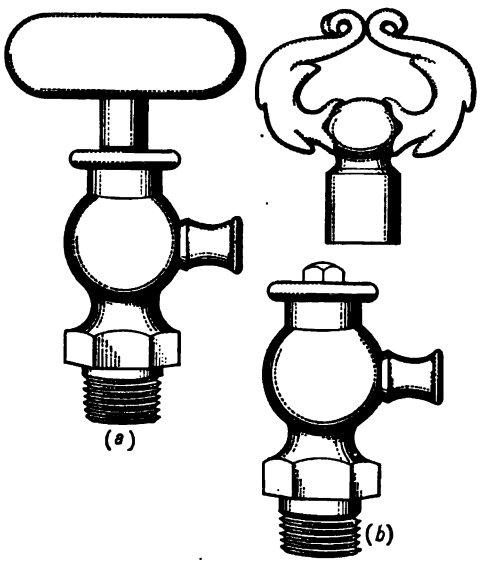

FIG. 35. COMPRESSION AIR COCKS.

COVERINGS

The proper *insulation* of air, water, and steam piping, valves, fittings, etc., must be carefully considered, not only from the standpoint of *heat loss*, which concerns steam and hot-water lines, but from the standpoint of *heat absorption*, which concerns cold-water piping as well as brine and ammonia lines. In fact, ordinary cold-water piping is often covered merely to prevent *sweating* in very hot weather.

Efficiency of Coverings. The heat loss to be overcome from steam and hot-water lines and the insulating efficiency of the various coverings depend upon the steam or water temperature and the porosity and thickness of the covering. No pipe covering is capable of preventing all the heat loss which would take place from bare uncovered pipe, but efficiencies as high as 86 per cent have been secured with commercial coverings, as shown in the following table and curves based on tests of various makes of covering. In every case the efficiency is understood to be the ratio of the heat-loss saving per sq. ft. to the heat loss per sq. ft. of bare pipe for the same internal and external temperature, rate of flow and external-air movement. Thus the efficiency of a covering is:

$$E = \frac{(H.L.B.) - (H.L.C.)}{H.L.B.} \times 100\%, \text{ in which}$$

$H.L.B.$ = heat loss in B.t.u. per sq. ft. per hr., bare pipe,

$H.L.C.$ = heat loss in B.t.u. per sq. ft. per hr., covered pipe.

The heat loss must be measured for the same temperature range and with all other conditions maintained identical in the two series of tests.

The heat loss from bare pipe ranges from 2 to 4 B.t.u. per sq. ft. per hour per degree difference in temperature between the steam or water flowing in the pipe and the external air. This

coefficient is not a constant and is highest for small pipe and large temperature differences. In all cases *still air* is supposed to surround the pipe, otherwise the loss *may far exceed* even 5 B.t.u. per sq. ft. per hour.

The *Babcock and Wilcox Co.* gives the following table for heat losses from both bare and covered steam piping, with magnesia covering of varying thicknesses:

TABLE 26

APPROXIMATE EFFICIENCIES OF VARIOUS COVERINGS REFERRED TO BARE PIPES

Covering	Efficiency
Asbestocel	76.8
Gast's Air Cell	74.4
Asbestos Sponge Felt	85.0
Magnesia	83.5
Asbestos Navy Brand	82.0
Asbestos Sponge Hair	86.0
Asbestos Fire Felt	73.5
Cork	84.2–87.1

Based on one-inch covering and tests by *Paulding, Jacobus, Brill,* and others.

TABLE 27

HEAT LOSS FROM COVERED* AND UNCOVERED STEAM PIPES

CALCULATED FOR 160 POUNDS PRESSURE AND 60 DEGREES TEMPERATURE

Pipe, Inches	Thickness of Covering	½ inch	¾ inch	1 inch	1¼ inch	1½ inch	Bare
2	B.t.u. per lineal foot per hour	149	118	99	86	79	597
	B.t.u. per square foot per hour	240	190	161	138	127	959
	B.t.u. per square foot per hour per one degree difference in temperature	.770	.618	.519	.445	.410	3.198
4	B.t.u. per lineal foot per hour	247	198	160	139	123	1,085
	B.t.u. per square foot per hour	210	164	136	118	104	921
	B.t.u. per square foot per hour per one degree difference in temperature	.677	.592	.439	.381	.335	2.97
6	B.t.u. per lineal foot per hour	352	269	221	190	167	1,555
	B.t.u. per square foot per hour	203	155	127	110	96	897
	B.t.u. per square foot per hour per one degree difference in temperature	.655	.500	.410	.355	.310	2.80
8	B.t.u. per lineal foot per hour	443	337	276	235	207	1,994
	B.t.u. per square foot per hour	196	149	122	104	92	883
	B.t.u. per square foot per hour per one degree difference in temperature	.632	.481	.394	.335	.297	2.85
10	B.t.u. per lineal foot per hour	549	416	337	287	250	2,468
	B.t.u. per square foot per hour	195	148	120	102	89	877
	B.t.u. per square foot per hour per one degree difference in temperature	.629	.477	.387	.329	.287	2.83

* Covering—Magnesia, canvas covered.

NOTE.—For calculating radiation for pressure and temperature other than 160 pounds and 60 degrees, use B.t.u. figures for one degree difference. (Approximate only, as coefficient varies with the temperature range.)

Tests of Pipe Covering. The heat loss from bare and covered pipes has recently been determined in a series of tests conducted at the University of Wisconsin. The results of these tests have been reported at length in a paper presented at the annual meeting of the *A. S. M. E.*, December, 1915, by *L. B. McMillan.*

The tests were run on 5-inch diameter standard steel pipe, and a net length of 15 ft. was used for measuring the heat transmission of bare and covered pipe. The results are plotted

in the form of curves (Figs. 36 and 37), and the following statement applies to the test on uncovered pipe:

"The total loss curve in Fig. 36 is plotted directly from the data obtained during the test. The ordinate of any point is the total heat loss per hour, which is the equivalent of the electrical energy required to maintain the pipe at the given temperature, and the abscissa is the difference between pipe temperature and room temperature. On the same sheet is plotted a curve of heat losses per hour from the short pipe at various temperature differences; this curve is called "end correction." The difference of ordinates between the two curves at any value of temperature difference gives the net

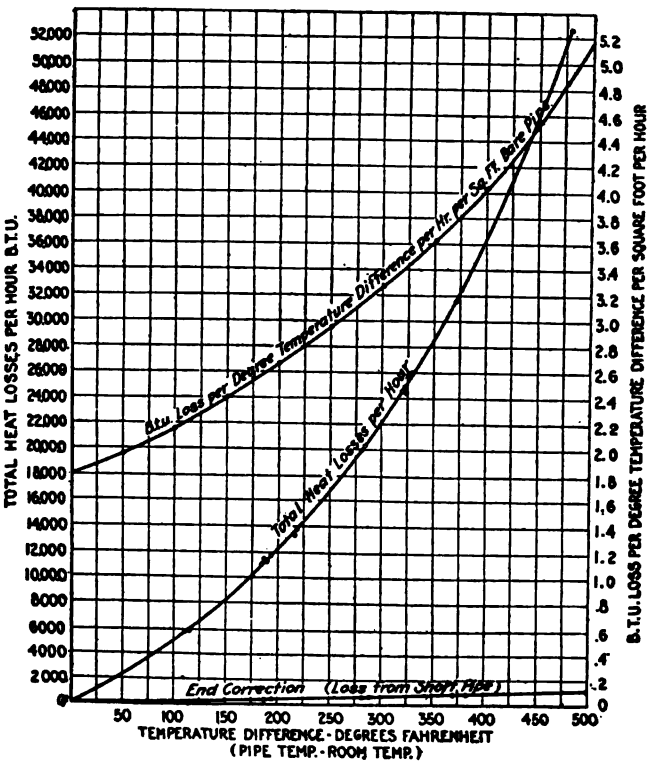

FIG. 36. TEST OF BARE PIPE.
(*L. B. McMillan.*)

heat loss per hour from the 15-ft. length of bare pipe. This net loss divided by the temperature difference and the area of test section (22.03 sq. ft.) gives the heat loss per degree temperature difference per square foot per hour.

"The curve of net heat losses per degree temperature difference per square foot per hour is shown in Fig. 36 to a much larger scale. This curve shows that the heat loss per degree temperature difference is far from being a constant at all temperatures, as has been assumed or implied by most former investigators."

All the coverings tested were bought in the open market, and *Mr. McMillan* gives the following description of the insulation as furnished ready for testing:

"The statements as to whether the covering was recommended for high- or low-pressure or superheated steam pipes were furnished by the manufacturers, and are not conclusions drawn from the tests.

The weight per foot in each case is the average weight per lineal foot of 5-in. covering, and the thickness given is the average thickness.

"I. *J-M 85 Per Cent Magnesia.* Moulded sectional covering for high-pressure steam pipes. 85 per cent by weight of magnesium carbonate and the remainder principally asbestos fiber. Weight per foot 2.92 lb., and thickness 1.08 in.

"II. *J-M Indented.* Layers of asbestos felt with indentations, about 1¼ in. in diameter and

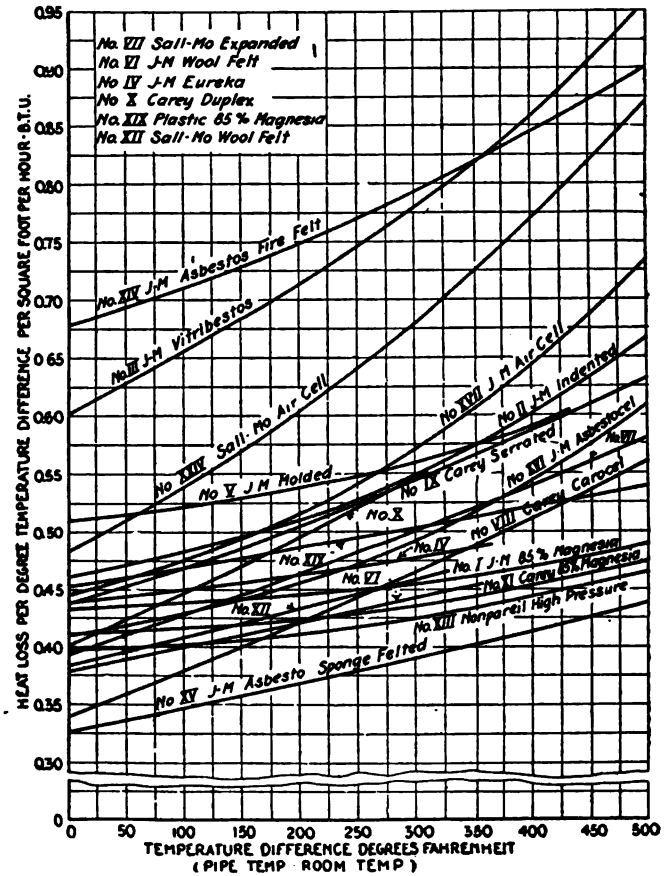

FIG. 37. SUMMARY OF RESULTS ON SINGLE THICKNESS COVERINGS.
(*L. B. McMillan.*)

⅛ in. deep, spaced very close to each other in staggered rows. For pipes containing high-pressure steam. Weight per foot, 3.46 lb., and thickness 1.12 in.

"III. *J-M Vitribestos.* Asbestos air-cell covering made of alternate layers of smooth and corrugated vitrified asbestos sheets. Corrugations about ¼ in. deep and run lengthwise of the pipe. For use on high-pressure and superheated steam pipes, and for stack linings, etc. Weight per foot, 4.05 lb., and thickness 0.96 in.

"IV. *J-M Eureka.* For low-pressure steam and hot-water pipes. Made of ¼ in. of asbestos felt on the inside of the section and the balance of alternate layers of asbestos and wool felt. Weight, 4.60 lb. per ft., and thickness 1.04 in.

"V. *J-M Moulded Asbestos.* Moulded sectional covering for use on low- and medium-pressure steam pipes. Made of asbestos fiber and other fireproof material. Weight per ft., 5.53 lb., and thickness is 1.25 in.

"VI. *J-M Wool Felt.* A sectional covering made of layers of wool felt with an interlining of two layers of asbestos paper. May be used on low-pressure steam and hot-water pipes. Weight per ft., 2.59 lb., and thickness 1.10 in.

"VII. *Sall-Mo Expanded.* A covering for use on high- and low-pressure steam pipes. Made of eight layers of material, each consisting of a smooth and a corrugated piece of asbestos paper, the corrugations being so crushed down to form small longitudinal air spaces. Weight, 3.47 lb. per ft., and thickness 1.07 in.

"VIII. *Carey Carocel.* Composed of plain and corrugated asbestos paper firmly bound together. Corrugations are approximately ⅛ in. deep and run lengthwise of the pipe. For use on medium- and low-pressure steam pipes. Weight, 3.06 lb. per ft., and thickness 0.99 in.

"IX. *Carey Serrated.* For high-pressure steam pipes. Composed of successive layers of heavy asbestos felt having closely spaced indentations. Weight, 5.66 lb. per ft., and thickness 1.00 in.

"X. *Carey Duplex.* For low-pressure steam and hot-water pipes. Alternate layers of plain wool felt and corrugated asbestos paper firmly bound together. Corrugations run lengthwise of the pipe and make air cells approximately ¼ in. deep. Weight, 1.79 lb. per ft., and 0.96 in. thick.

"XI. *Carey 85 Per Cent Magnesia.* For high-pressure steam and similar in composition to No. 1. Weight per foot, 2.74 lb., and thickness 1.10 in.

"XII. *Sall-Mo Wool Felt.* Similar to No. VI except without interlining asbestos paper. For low-pressure steam and hot-water pipes. Weight per foot, 3.73 lb., and thickness 1.01 in.

"XIII. *Nonpareil High Pressure.* Moulded sectional covering consisting mainly of silica in the form of diatomaceous earth—the skeletons of microscopic organisms. For high-pressure and superheated steam pipes. Weighs 2.96 lb. per ft. and is 1.16 in. thick.

"XIV. *J-M Asbestos Fire Felt.* Asbestos fiber loosely felted together, forming a large number of small air spaces. For high-pressure and superheated steam pipes. Weight per ft., 3.75 lb., and thickness 0.99 in.

"XV. *J-M Asbestos Sponge Felted.* Made from a thin felt of asbestos fiber and finely ground sponge forming a very cellular fabric. Forty-one of these sheets per in. thickness; air spaces are formed between the sheets in addition to those in the felt itself. Specially recommended for high-pressure and superheated steam pipes. Weight per ft., 4.04 lb., and thickness 1.16 in.

"XVI. *J-M Asbestocel.* For medium-pressure steam and heating pipes. Alternate sheets of corrugated and plain asbestos paper forming air cells about ⅛ in. deep that run around the pipe. Weight per ft., 1.94 lb., and thickness 1.10 in.

"XVII. *J-M Air Cell.* Corrugated and plain sheets of asbestos paper arranged alternately so as to form air cells about ¼ in. deep running lengthwise of the pipe. For medium-pressure steam and heating pipes. Weight per ft., 1.55 lb., and thickness 1.00 in.

"XVIII. ½-*In. J-M Plastic* 85 *Per Cent Magnesia.* For fittings, valves, irregular surfaces, boiler coverings, etc. Similar in composition to the sectional 85 per cent magnesia, but applied in the form of a cement or plaster. Thickness, 0.51 in. for the first test, and weight per ft. 1.51 lb.

"XIX. 1-*In. J-M Plastic* 85 *Per Cent Magnesia.* Thickness, 1.05 in.; weight per ft., 3.33 lb.

"XX. 1½-*In. J-M Plastic* 85 *Per Cent Magnesia.* Thickness, 1.48 in.; weight per ft., 5.23 lb.

"XXI. 2-*In. J-M Plastic* 85 *Per Cent Magnesia.* Thickness, 1.99 in.; weight per ft., 7.46 lb.

"XXII. 3-*In. J-M* 85 *Per Cent Magnesia.* The two inches of plastic covering of No. XXI and one standard thickness layer of sectional covering outside of that. Thickness, 3.24 in.; weight per ft., 11.67 lb.

"XXIII. ½-*In. Sall-Mo Air Cell.* Similar in composition and uses to No. XVII. Thickness, 0.51 in., and weight per ft. 0.99 lb.

"XXIV. 1-*In. Sall-Mo Air Cell.* Thickness, 0.95 in.; weight per ft., 1.57 lb.

"XXV. 2-*In. Sall-Mo Air Cell.* Thickness, 1.86 in.; weight per ft., 3.58 lb.

"XXVI. 3-*In. Air Cell.* Two inches of *Sall-Mo* and one inch of *J-M Air Cell.* Thickness, 3.04 in.; weight per ft., 6.66 lb."

The Economy of Using Pipe Covering. The saving to be effected by the use of pipe covering is readily calculated for any given condition as follows:

Example. Given a 3″ line 100 ft. in length, carrying steam at 80 lb. gage, and covered with one inch of 85 per cent magnesia having an insulating efficiency of 83.5 per cent as given by Table 26. The plant operates 10 hours per day for 300 days per year, and the average boiler-room temperature is 65° F. Coal costs $4.00 per ton.

Loss, B.T.U. per Hour, 100 ft. Pipe

FIG. 38.

The heat saved in this line with this covering in place is, assuming a low value for the coefficient at 80 lb., and taking $K = 2.65$ B t.u. per hr., $H = 2.65 \times (3.24 - 65) \times 0.835 = 575$ B.t.u. per sq. ft. per hr. Hence, for a year of 300 days at 10 hours per day the heat loss is $= 575 \times 300 \times 10 = 1{,}725{,}000$ B.t.u., which is equal to $\frac{1{,}725{,}000}{13{,}500 \times 0.67} = 191.5$ lb. of coal saved per year. It is assumed a coal of 13,500 B.t.u. heat value per pound is burned with a boiler efficiency of 67 per cent.

FIG. 39. MOULDED 85% MAGNESIA COVERING FOR PIPE AND FITTINGS.

Since this coal costs $4.00 per ton, the saving per sq. ft. of pipe per year is $\frac{191.5 \times 400}{2000} = 38$ cents, and per 100 ft. of 3″ pipe $= 91.65 \times 0.38 = \$34.80$ per year.

The cost of magnesia covering at 65 per cent off the list is $0.158 per lineal *ft.*, or, in a year of 300 days, the saving in $\frac{100 \times 0.158}{34.80} \times 300 = 136$ days would pay for the covering.

The preceding chart (Fig. 38) by *H. C. Spaulding* indicates graphically the saving to be effected in heat units and dollars by standard covering, when applied to pipe of varying diameters,

FIG. 40. AIR-CELL COVERING—PLAIN OR VITRIFIED ASBESTOS.

for a wide range in steam temperatures or pressures, with coal costing from three to six dollars per ton.

Commercial Pipe Coverings. The covering materials commercially available are usually moulded into cylindrical shape in lengths of about 3′-0″ and of the proper diameter to fit all standard pipe sizes (Figs. 39 and 40). To facilitate their application, they are usually split lengthwise and are supplied with a suitable canvas jacket and the necessary fastening bands of about 30 *B. and S.* gage solid sheet brass for holding the covering and its jacket in place.

The *loose covering material* in fibrous or granulated condition may also be secured in bulk for plastic application to various sorts of irregular surfaces. The more common coverings, such as magnesia, diatomaceous earth, cork, etc., are moulded into certain special forms (Fig. 39) to fit the principal valves and fittings used.

Insulating Materials. The materials used for insulating boilers, tanks, pipe lines, fittings, etc., range from hair, wool felt, silk, and asbestos fiber to granulated cork, powdered magnesium carbonate, and diatomaceous earth, as well as ordinary paper and asbestos paper, either plain, corrugated, or vitrified.

The *requirements* for a satisfactory insulating material are that it should be (1) a good non-conductor, (2) easily moulded and applied, (3) not liable to deterioration or attractive to vermin, (4) fireproof, (5) light in weight, and (6) capable of withstanding some abuse, and not affected by water or steam. Unfortunately all these characteristics are not possessed by any one covering, as, for example, hair or wool felt, which are the best possible insulators, are also subject to deterioration and vermin, and will not stand abuse.

Such coverings as asbestos, magnesia, diatomaceous earth, cork and vitrified asbestos air cells are probably most generally used and most nearly fulfill the above requirements.

Selection of Covering. The character of the service usually determines the *kind* of covering as well as the *thickness* to be applied. For *steam service* the thickness varies with the pressure of saturated steam and with the temperature of superheated steam, and in the best piping practice the following insulation requirements are observed:

Exposed radiating surfaces of all pipes, all high-pressure steam flanges, valve bodies and fittings, heaters and separators, should be covered with non-conducting material wherever such covering will improve plant economy. All main steam lines, engine and boiler branches, should be covered with 2 in. of 85 per cent carbonate of magnesia or the equivalent. Other lines may be covered with 1 in. of the same material. All covering should be sectional in form, and large surfaces should be covered with blocks, except where such material would be difficult to install, in which case plastic material should be used. In the case of flanges the covering should be tapered back from the flange in order that the bolts may be removed. Removable covers should be applied to the flanges.

All surfaces should be painted before the covering is applied. Canvas is ordinarily placed over the covering, and held in place by brass bands.

The *sectional moulded coverings*, such as 85 per cent magnesia (Fig. 39), are made in four thicknesses: (1) Standard, 1″; (2) Medium, 1½″; (3) Double standard, about 2″, and (4) Double medium, about 3″.

These same coverings are made up in blocks 3″x18″, 6″x36″, and range from ½″ to 4″ thick.

The *air-cell sectional-moulded covering* (Fig. 40) is usually made in three thicknesses: ½″, ¾″ and 1″ respectively, but is also supplied in heavier grade if required. This covering may be *vitrified* by dipping it in a vitreous bath, which, when properly treated, is capable of withstanding both water and great heat.

Moulded into flat or curved blocks this vitrified air-cell material is used for lining steel stacks and breechings and other surfaces subjected to excessive heat.

For *hot-water service* either one inch magnesia or earth covering is usually sufficient, applied as for steam.

For covering *ice* or *chilled water, brine, ammonia* piping, etc., granulated cork, hair, or wool-felt covering is employed in thicknesses ranging from 1″ to 2″, depending on the temperature differential. (See "Refrigeration," Volume II.) Four ranges are recognized for cork: (1) Standard Brine Covering, 0° to 25° F., (2) Special Thick-Brine Covering, below 0° F., (3) Ice-Water Covering, 25° to 45° F., and (4) Cold-Water Covering, above 45° F.

The latest practice in specifying insulation material is to call for a *guaranteed insulating efficiency* or maximum permissible heat loss from or to the covered lines, and leave the question of the material, the thickness, and the method of application of the covering to the contractor, who must use such covering as will satisfy the guaranteed requirements.

STEAM-PLANT ACCESSORIES

A great variety of *secondary equipment* is required in large steam plants, and even in small plants more or less of this apparatus is essential for the proper installation and operation of the system.

Pipe Hangers. Suitable pipe hangers, supports, brackets, rollers, and guides must be used in the erection of all water, steam and air piping, and although this equipment is standard to some extent, special conditions are constantly arising which require new designs or modifications of old ones as shown in Figs. 41 and 42, where a variety of pipe hangers and supports are illus-

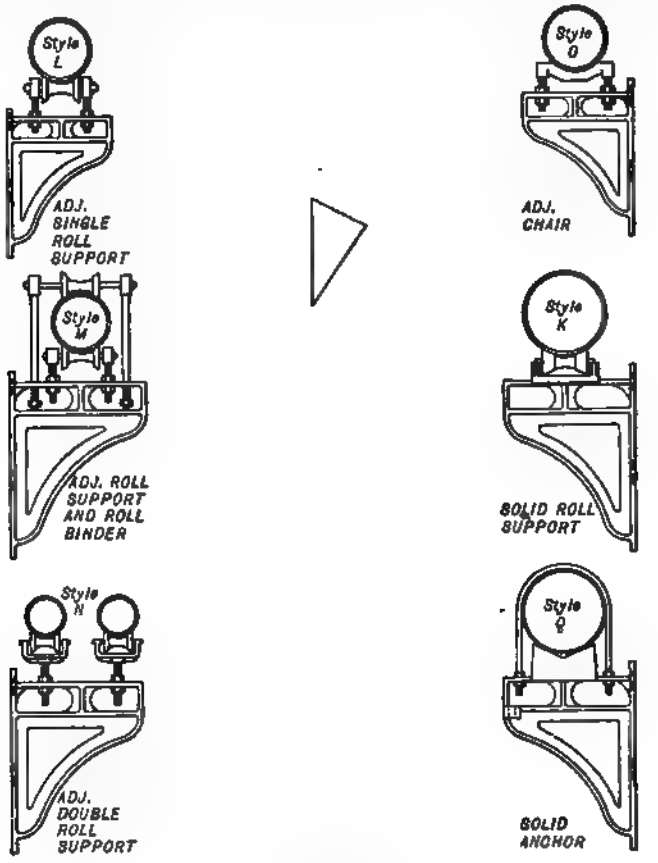

FIG. 41. PIPE SUPPORTS, BRACKETS, ROLLS, CHAIRS, ANCHORS, ETC.
Suitable for Pipe Lines from 5 to 30 Inch.
(*Crane Co.*)

TABLE 28
DIMENSIONS OF BRACKETS

Size	Safe Load	Size of Pipe Will Support	*A*	*B*	*C*	*D*	*E*	*F*	*G*
No. 11	1 Ton	5 to 8 in.	24	12	25	8	8½	1¼	5½
No. 12	2 Tons	9 to 14 in.	40	14	30	6	9	1¾	6
No. 13	3 Tons	15 to 18 in.	45	16	34	6	9½	1½	6½
No. 14	4 Tons	20 to 24 in.	51½	19	40	6	11½	1⅝	7
No. 15	Special	20 to 30 in.	64	19	44½	6	12½	1⅝	7

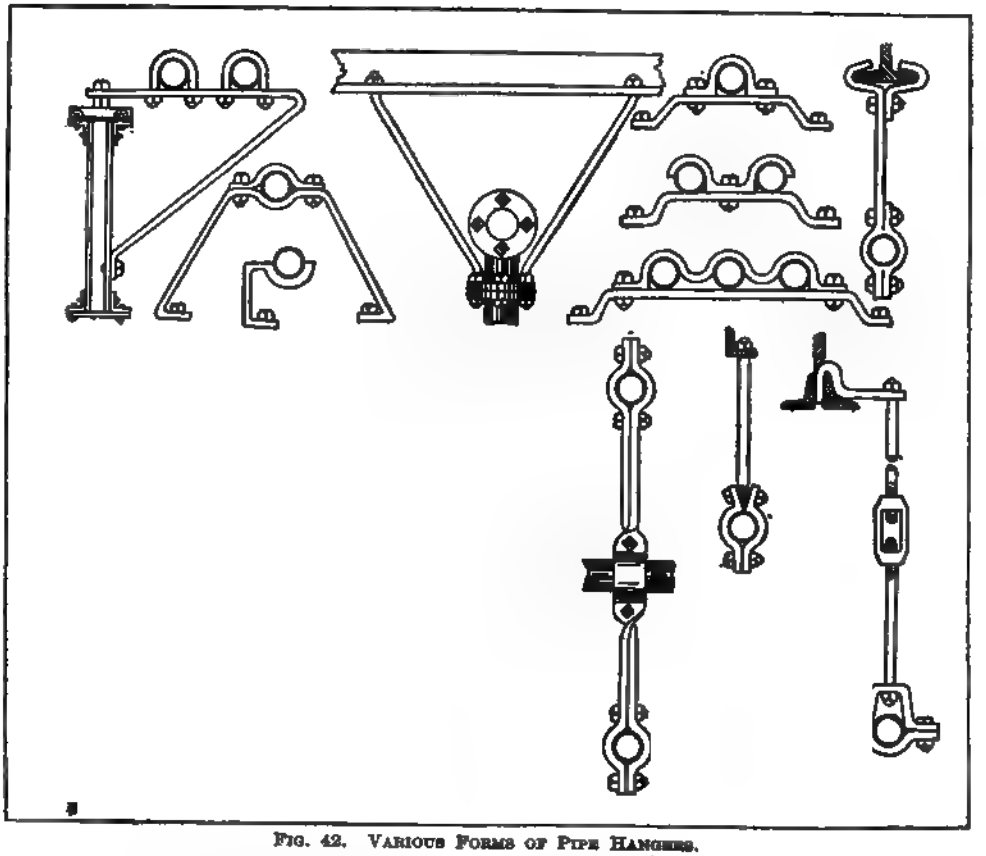

FIG. 42. VARIOUS FORMS OF PIPE HANGERS.

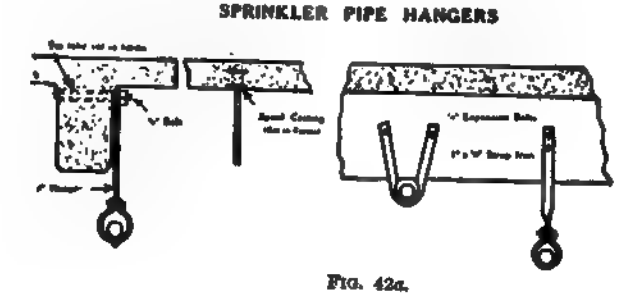

FIG. 42a.

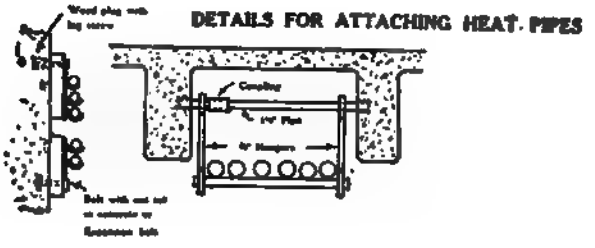

FIG. 42b.

trated. Their application depends entirely on the special conditions to be met, and the impossibility of attempting to standardize such equipment is self-evident.

Certain more or less *standard forms of hangers* are made, however, by most manufacturers, and an approved type of adjustable cast-iron hanger is shown in Fig. 43 for hanging pipe from

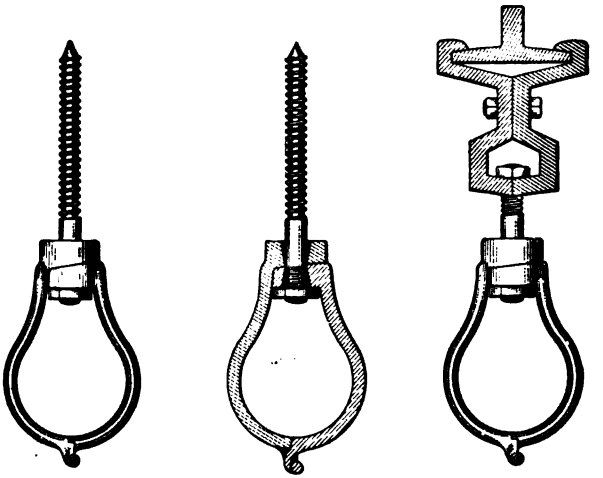

FIG. 43. PITTSBURGH PIPE HANGER.

wooden or steel beams. The pipe collars or yokes of these hangers are made in sizes for ½" to 8" pipe, and the beam clamps are made for beams with from 3" to 8" flanges.

All pipe hangers and supports should be readily *adjustable* (Figs. 41 and 43) and provide for *reasonable movement* of the piping due to expansion and contraction. In case the supporting medium to which the hanger is attached is subject to unusual vibrations not found in all parts of the system, the hanger should be provided with *shock-absorbing springs* to overcome such vibration as far as possible.

The *design and proportions* of pipe clamps and hangers for pipes from 4" to 17" in diameter are shown in Tables 29, 30 and 31, following, which were compiled by *L. S. Richardson* and reported in "Machinery." The supports or hangers are ordinarily placed from 10 to 15 ft. on centers depending on pipe size, and must not only be near enough together not to exceed the allowable fiber stress in the rod, but also to keep the pipe from sagging, which in the smallest sizes of less than 4" diameter may require a spacing of not more than 8 ft. between hangers.

Pipe Rollers and Supports. In addition to the brackets and hangers already shown, a standard assortment of pipe chairs, bearings and rollers may be obtained for supporting pipe in trenches, or for attachment to brackets or hangers. (Figs. 51 and 54.)

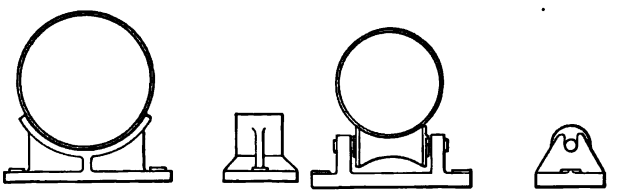

(*a*)—Cast-Iron Pipe Chair or Support.

(*b*)—Cast-Iron Trunnion Roller Pipe Support

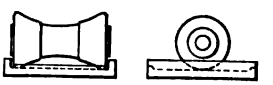

(*c*)—Cast-Iron Plate Roller Pipe Support.

FIG. 51

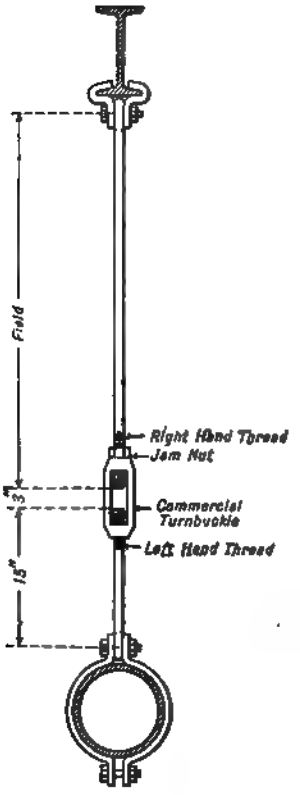

FIG. 44. VERTICAL TYPE.

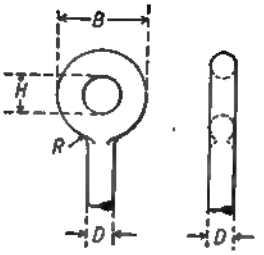

FIG. 45. DETAIL OF EYE BOLT END.

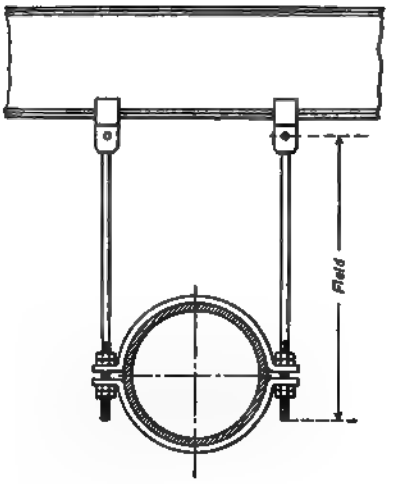

FIG. 46. HORIZONTAL TYPE.

Size of Rod (*D*)	*B*	*H*	*R*
¾	2½	1	1
⅞	2½	1¼	1¼
1	3¼	1¼	1¼

All Dimensions in Inches

The size of the rod is determined by the size of the pipe. See Tables 30 and 31.

The size of the beam clamp is determined by the size of the beam and the size of the rod. See Table 29.

For the vertical type make the lower rod 15 inches long with left-hand thread. These can be made up in lots and be carried in stock.

Upper rod to have right-hand thread and one jam nut. Determine length of rod in field.

Use commercial turnbuckles.

Figure clearance between upper and lower rods as about 3 inches.

Rods are not upset at ends. Make threads 6 inches long. Horizontal type rods to have 4 nuts each, right-hand thread.

Determine length of rod in field.

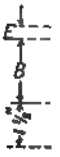

TABLE 29

I-BEAM CLAMPS

All Dimensions in Inches. All Loads in Pounds.

Loads Based on Fiber Stress of 12,000 Pounds for Wrought Iron

¾ rod	3500
⅞ rod	5000
1 rod	6500

FIG. 47. DETAIL OF I-BEAM CLAMP (OPEN TYPE).

Size of Rod	*T*	*B*	*H*	Size of Bolt	Size of Rod		Size of Beam							
							8	9	10	12	15	18	20	24
¾	⅝	1¾	1	⅜ x 3½	All Rods	*E*	5/16	5/16	5/16	3/8	7/16	1/2	9/16	5/8
⅞	¾	2	1¼	1 x 4½	¾	*L*	1 9/16	1 5/8	1 7/8	2 1/16	2 5/16	2 9/16	2 11/16	3 1/16
1	⅞	2¼	1¼	1⅛ x 4¾	⅞	*L*	1 13/16	1 11/16	1 15/16	2	2 1/4	2 1/2	2 5/8	3
					1	*L*	1 7/16	1 7/8	1 3/4	1 15/16	2 3/16	2 7/16	2 9/16	2 15/16

TABLE 29. (*Continued*)

Size of Rod	C		F		K
⅞	⅛	1	⅛	2	1⅝
1	1⅛	1⅛	⅛	2⅛	1⅞
1	1⅛	1⅛	⅛	2⅛	2⅛

Size of Bolt	Size of Beam	A	D
⅞ x 3¼	3	2⅛	3⅛
1 x 3½	4	3⅛	4⅛
1⅛ x 4¼	5	3⅛	5⅛
	6	3¾	6⅛
	7	4	7⅛

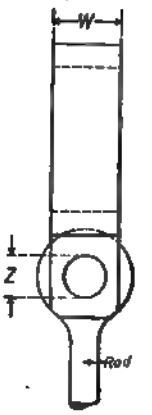

FIG. 48. DETAIL OF I-BEAM CLAMP. (LOOP TYPE.)

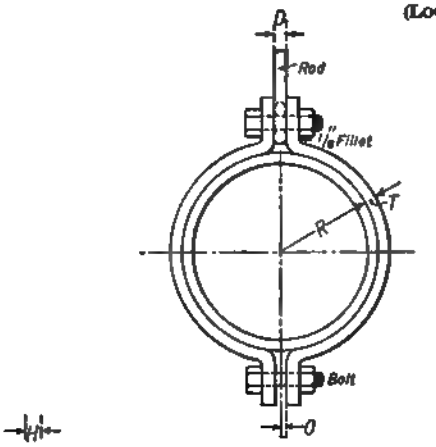

FIG. 49. VERTICAL TYPE. (See Table 30.)

TABLE 30

PIPE CLAMPS AND HANGERS

All Dimensions in Inches

4	⅛	⅛	1	⅜	1¼	⅞ x 3	4	7⅛	9⅛	2½	4	8⅝	11½	2¼
4½	⅛	⅛	1	⅜	1¼	⅞ x 3	4½	7½	10⅛	2½	4½	9⅛	11⅝	2⅝
5	⅛	⅛	1	⅜	2	⅞ x 3	5	8½	11	2 13/16	5	9⅝	12¼	3¼
6	⅛	⅛	1	⅜	2	⅞ x 3	6	9½	12	3 3/16	6	10⅝	13¼	3 15/16
7	⅛	⅛	1	⅜	2	⅞ x 3	7	10½	13	3 13/16	7	11⅝	14¼	4 7/16
8	9/16	⅛	1⅛	7/16	2	1 x 3½	8	11½	14⅝	4 5/16	8	13⅛	16	5
9	9/16	⅛	1⅛	7/16	2¼	1 x 3½	9	12⅛	15⅝	4 13/16	9	14⅛	17	5⅛
10	9/16	⅛	1⅛	7/16	2¼	1 x 3½	10	14	16¾	5⅛	10	15⅝	18⅛	6 1/16
12	⅝	1	1⅛	½	2½	1⅛ x 4	12	16⅛	19⅜	6⅜	12	18⅛	21⅛	7⅛
14 15 O. D.	⅝	1	1⅛	½	2½	1⅛ x 4	14 15 O. D.	18⅛	21⅝	7½	14 15 O. D.	20⅜	23⅜	8⅜
15 16 O. D.	⅝	1	1⅛	½	2½	1⅛ x 4	15 16 O. D.	19⅛	22⅝	8	15 16 O. D.	21⅛	24⅛	8 15/16
16 17 O. D.	⅝	1	1⅛	½	2½	1⅛ x 4	16 17 O. D.	20⅛	23⅝	8½	16 17 O. D.	22⅜	25⅝	9⅛

FIG. 50. HORIZONTAL TYPE.

(See Table 31.)

TABLE 31

PIPE CLAMPS AND HANGERS

All Dimensions in Inches

FOR ALL CLAMPS						FOR PIPE CLAMPS				FOR FITTING CLAMPS			
Size of Pipe	C	D	H	T	W	Size of Pipe	A	B	R	Size of Pipe	A	B	R
4	5/16	3/8	7/8	5/8	1 3/4	4	8	10 1/4	2 1/8	4	9 1/4	11 1/4	2 7/8
4 1/2	5/16	3/8	7/8	5/8	1 3/4	4 1/2	8 1/2	10 3/4	2 3/8	4 1/2	9 3/4	12 1/4	3 1/8
5	5/16	3/8	7/8	5/8	2	5	9 1/2	11 3/4	2 13/16	5	10 1/4	12 3/4	3 3/8
6	1/2	1/2	1 1/8	3/4	2	6	10 1/2	12 3/4	3 5/16	6	11 3/4	13 3/4	3 15/16
7	1/2	1/2	1 1/8	3/4	2	7	11 1/2	13 3/4	3 13/16	7	12 3/4	14 3/4	4 7/16
8	1/2	1/2	1 1/8	3/4	2	8	12 1/2	14 3/4	4 5/16	8	13 1/2	16	5
9	3/4	3/4	1 3/8	3/4	2 1/2	9	13 1/2	15 3/4	4 13/16	9	14 1/2	17	5 1/2
10	1/4	3/4	1 3/8	7/8	2 1/2	10	14 1/4	16 1/2	5 3/8	10	15 1/2	18 1/4	6 1/16
12	5/16	1/2	1	1	2 1/2	12	17	19 1/2	6 3/8	12	18 3/4	21 1/2	7 3/4
14 15 O. D.	5/16	1/2	1	1	2 1/2	14 15 O. D.	19 1/4	21 3/4	7 1/2	14 15 O. D.	21	23 1/2	8 1/2
15 16 O. D.	5/16	1/2	1	1	2 1/2	15 16 O. D.	20 1/4	22 1/4	8	15 16 O. D.	22 1/2	24 1/4	8 15/16
16 17 O. D.	5/16	1/2	1	1	3 1/2	16 17 O. D.	21 1/4	23 1/4	8 1/2	16 17 O. D.	23 1/4	26	9 1/2

In many cases it is necessary to support piping at some distance from the floor on columns or frames resting on the floor with a yoke at top of the adjustable column (Fig. 52) or with an adjustable hanger (Fig. 53), in case of a frame, which always makes a more stable support.

High-Pressure Steam Traps. The use of steam traps for automatically draining the condensation from steam lines at varying pressures is very generally practiced in all steam plants except those in which the water of condensation, as in low-pressure direct heating systems, returns to the boiler by gravity. These devices, of which an approved form is shown in Fig. 55, are so arranged, with outlet valve under the automatic control of a ball float or an open bucket float, that when the receiving chamber of the trap fills with water of condensation, as indicated by the gage glass, the float automatically opens the discharge valve, and if the steam pressure

at the inlet is greater than the total head at the outlet the water is driven out until the falling float again closes the discharge valve. This latter valve must always be protected by a water seal of 2 or 3 inches to prevent any possibility of steam blowing through same. A suitable drain or blow-off and self-contained by-pass should be provided, and also an air valve, for venting trap of any accumulation of air which may occur. The *Anderson* model "D" steam trap (Fig. 55) possesses all these features, and is readily inspected in case of trouble without having to break the steam joints or pipe connections to the trap.

Low-pressure steam traps are described in detail in the Chapter on "Direct Steam Heating," in Volume I.

Separating or *non-return traps* like the above will not ordinarily return water to the boiler when the steam supply for the trap is taken from this same boiler. A combination of two traps is necessary for this service and a *tilting type of return trap* is generally used, placed from 3 to 4 ft. above the boiler water-line, into which the separating traps can discharge. This type of trap is also discussed in detail in the Chapter on "Direct Steam Heating," in Volume I.

Steam and Oil Separators and Exhaust Heads. The removal of fine particles of water and oil, which are often "entrained" or caught up by and carried along with the current of steam, is accomplished by the use of *steam and oil separators* (Fig. 56) and exhaust heads (Fig. 57). This apparatus is placed in the line di-

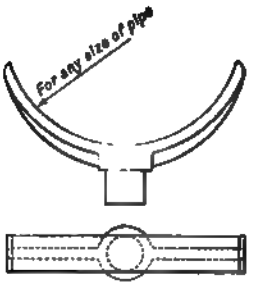

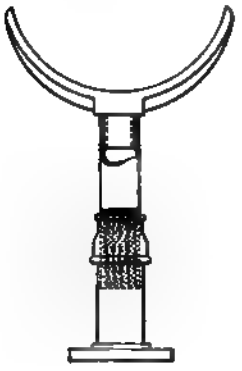

FIG. 52. A COLUMN PIPE SUPPORT WITH YOKE.

FIG. 53. A FRAME PIPE SUPPORT WITH FLEXIBLE PIPE HANGER.

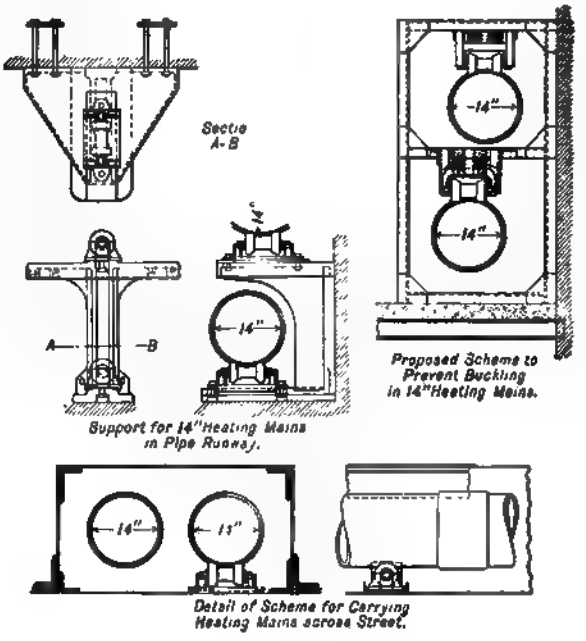

FIG. 54. DETAILS OF ROLLER SUPPORTS.

FIG. 55. ANDERSON MODEL "D" STEAM TRAP
(See Tables 32 and 33.)

TABLE 32
SIZES AND CAPACITIES OF THE ANDERSON MODEL "D" STEAM TRAP

Size number of trap	1	2	3	4	5	6	7
Size of pipe connection, in inches	½	¾	1	1¼	1½	2	2½
Maximum discharge of condensation, per hour in pounds	1,500	2,400	4,000	6,600	8,000	12,000	24,000
Greatest number of square feet of surface that should be applied	1,000	1,600	2,600	4,700	7,000	10,000	20,000
Greatest number of lineal feet of 1-inch pipe surface that should be applied	3,000	5,000	8,000	14,000	20,000	30,000	60,000
Net weight of complete trap, in pounds	81	92	150	166	268	321	525
Shipping weight, in pounds (boxed)	110	114	175	200	335	394	620

NOTE.—Standard steam traps are suitable for pressures from 150 pounds down to 30 pounds. Low-pressure steam traps are suitable for pressures from 30 pounds down. Always state maximum steam pressure at the trap.

TABLE 33
DIMENSIONS IN INCHES OF THE ANDERSON MODEL "D" STEAM TRAP

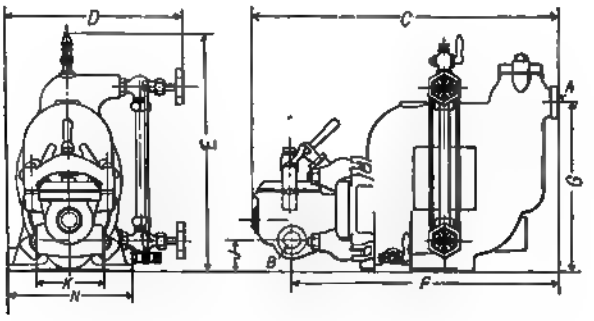

Size Number	1	2	3	4	5	6	7
A	1⅛	1⅜	1	1 1/16	1 1/16	2	2 1/16
B	1⅛	1⅜	1	1 1/16	1 1/16	2	2 1/16
C	19 1/16	20 5/16	24 1/16	25 3/16	30 5/16	32 1/16	39
D	11 1/16	11 1/16	12 5/16	13 1/16	14 5/16	15 1/16	17 1/16
E	15 1/16	16 1/16	18	18 1/16	22	23 1/16	27 1/16
F	16 1/16	18 1/16	21	22 1/16	26 1/16	28 1/16	33 1/16
G	10 5/16	11 1/16	13 1/2	14 1/16	17	18 5/16	22
J	2	2 1/16	1 13/16	2	2 1/16	2 1/16	3 1/16
K	4 1/16	4 1/16	4 1/16	4 1/16	6 1/16	6 5/16	8 1/16
N	7 5/16	7 1/16	9 1/16	9 1/16	11 1/16	12	14

rectly in the path of the steam, and by suitable baffles, which intercept the rapidly moving particles of liquid, collect or separate the water and oil from the steam. The greater momentum of these particles causes them either to drive ahead against the baffles or to be thrown

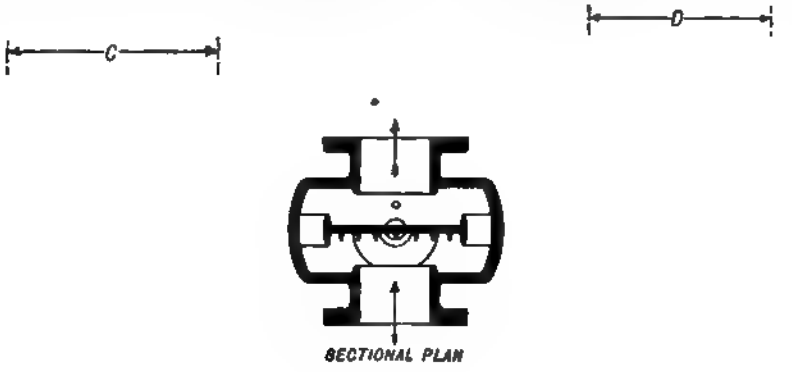

FIG. 56. COCHRANE HORIZONTAL TYPE OIL AND STEAM.
(See Table 34.)

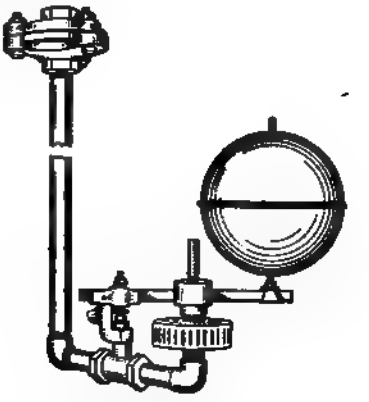

FIG. 57. EXHAUST HEAD.
Cast Iron.

FIG. 58. CLIMAX AUTOMATIC CELLAR DRAINER.

to the outside of the separating chamber by centrifugal force when the direction of the steam current is suddenly altered. In this way separation is effected, and the water and oil drained away by suitable drips.

The steam and oil separators are usually of cast iron, and are generally built in sizes from 3″ to 12″ for low-pressure, standard, and extra-heavy service, with corresponding flanges which may be readily bolted to flanges or fittings of the *American Standard* schedule for standard or extra-heavy duty. Sizes down to 1½″ and up to 36″ diameter may be obtained for special service.

Exhaust heads (Fig. 57) are preferably made of cast iron, although a number of designs in

sheet metal are made. The use of these heads is most essential at the top of all atmospheric exhaust lines if "dry" steam is to be discharged. If the *oil* and *water* entrained in the exhaust steam are not removed the destruction and contamination of exposed roofs and walls are almost certain to result from the artificial rain developed. These heads are built in all sizes up to 36" pipe diameter.

TABLE 34

DIMENSIONS OF COCHRANE STEAM AND OIL SEPARATORS

For Non-Condensing Systems. Any Working Pressure 50 Lb. per Sq. Inch or Under. Sizes, 3 to 12 Inches, Inclusive.

All Dimensions Given in Inches

Size of Pipe (I. D.)	Approx. Weights		Principal Dimensions of Standard Sizes						
	Stripped	Complete	*A*	*B*	*C*	*D*	*E*	*F*	Drip
3	118	150	3	7 ½	10 ½	11	4 ¾	17	¾
3 ½	138	175	3 ½	8 ½	11 ½	11 ¾	4 ¾	17	¾
4	155	200	4	9	12 ¼	12 ¼	5 ¼	17	¾
4 ½	180	225	4 ½	9 ¼	13 ¾	12 ¾	5 ¾	18	1
5	199	250	5	10	15	13 ½	6 ¼	19	1
6	234	300	6	11	17 ¼	14 ½	7 ¼	20 ½	1
7	356	430	7	12 ½	19 ½	15 ½	8 ¼	22	1 ¼
8	424	510	8	13 ½	21 ¾	16 ¾	9 ¼	23 ¼	1 ¼
10	731	850	10	16	26 ½	18 ¾	11 ¼	26	1 ½
12	1,113	1,280	12	19	31	21	13 ½	29	1 ½

Water Ejectors or Drainers. The use of *automatic ejectors* and *cellar drainers* for removing accumulated water from low points, such as *cellars, wheel pits, furnace* and *boiler pits, foundations*, etc., when the lift is small is commonly practiced if no sewer or drain is available at a lower level. These drainers may be operated by either steam or water at pressures of 15 lb. gage or more, beginning with a minimum lift of 5 to 6 ft. and increasing to 12 ft. at 80 lb. The *Climax* drainer (Fig. 58), *J. B. Clow and Sons*, has the following capacities at varying pressures when using water, and has the working parts made of brass to prevent corrosion. The apparatus is so installed that with an accumulation of 8" of water in the sump or pit the float will open the supply cock and discharge the dead water accumulated.

TABLE 35

CLIMAX DRAINERS AND CAPACITIES

(See Fig. 58)

No.	Pressure, Lb.	Lift, Feet	Capacity Gallons per Hour	Supply Pipe	Discharge Pipe
1	15 to 80	6 to 12	50 to 250	½"	1"
2	15 to 80	6 to 12	100 to 400	¾	1 ¼
3	15 to 80	6 to 12	150 to 600	1	1 ½
4	15 to 80	6 to 12	200 to 800	1 ¼	2
5	15 to 80	6 to 12	275 to 1,000	1 ½	2 ½
6	15 to 80	6 to 12	350 to 1,200	2	3

Sample Specification. Furnish and install one *Climax* or equal cellar drainer of a capacity of not less than (variable) gallons per hour. This ejector will be installed in a suitable sump pit, made of concrete of dimensions to accommodate the ejector. All necessary connections to the water-service piping and waste connections from the drainer must be made as directed by the superintendent.

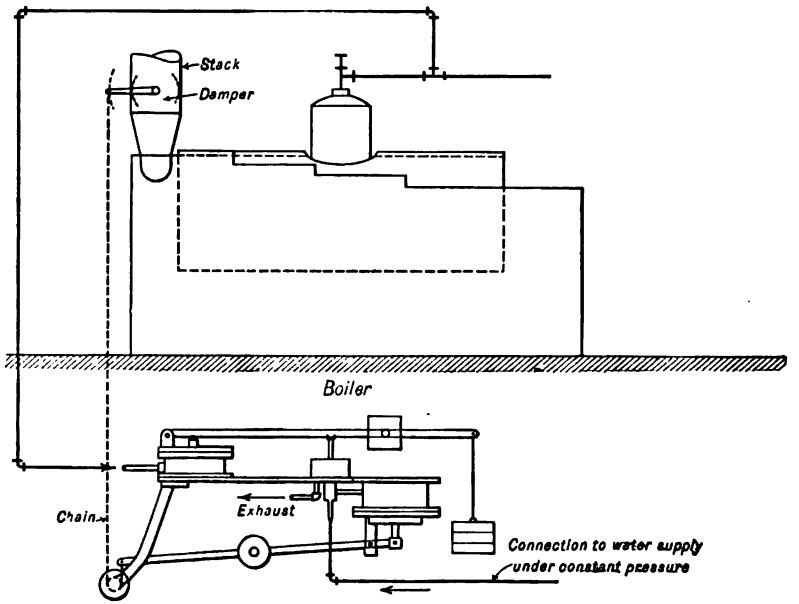

FIG. 59. HYDRAULIC DAMPER REGULATOR.

Damper Regulators for Power Boilers. The automatic control of the steam pressure in power-boiler service is readily accomplished by varying the intensity of the draft through the fuel bed. In order to do this it is only necessary to connect an hydraulically operated damper regulator (Fig. 59) to the main boiler damper in the smoke breeching. This regulator, under the direct influence of the steam pressure within the boiler, moves the damper so as to regulate the draft in accordance with the demand for steam, and at the same time maintains the pressure practically constant.

CHAPTER XVI

POWER PLANT PIPING

General Considerations. The piping system to fulfil its function adequately should be designed to give long life, reliable and convenient service, safety, and frequently provision for extension and plant testing.

For long life and safety only the best of available materials for the service demanded should be used. The additional cost of modern equipment is cheap insurance against a shut-down.

Adequate provision for expansion should be made by the liberal use of pipe bends. In general, steam lines should be so proportioned that an *excessive* drop in pressure due to friction is avoided. The condensation loss due to radiation and convection should be reduced to a minimum by the use of first-class insulation.

The prompt and efficient removal of the water formed by condensation in steam lines, by the liberal use of drips, is a most important factor in the design of steam lines. The velocity of the steam in boiler and engine leads, as usually proportioned, is considerably greater than a mile a minute, so that the impact of the water of condensation, which is picked up and carried along as a slug if not promptly removed, due to a sudden change in the direction of flow at elbows and fittings, is equivalent to a heavy blow. The results produced are vibration, knocking, and frequently destruction of the fittings.

All pocketing of the water should, if possible, be avoided.

Classification of the Piping System. In order to accomplish the best results in the design and layout of the power plant piping, an individual study of the various parts of the complete piping system should be made. The piping system may be conveniently divided into the following parts:

(1) *High-Pressure Piping.* This includes the piping connecting the boilers with the engines, turbines, and steam pumps, including the boiler leads, main steam header, and auxiliary header if used, engine and turbine leads, connections to auxiliaries, and low-pressure traps.

(2) *Low-Pressure Piping.* This includes all atmospheric exhaust lines, connections to feed-water heaters, and exhaust steam-heating lines.

(3) *Vacuum Piping.* Includes all exhaust connections between the prime mover and condenser.

(4) *Feed-Water Piping.* Includes all connections to and from the water end of feed pumps and injectors and the feed lines to the boilers.

(5) *Blow-off Piping.*

(6) *High- and Low-Pressure Drainage Systems.* Include drips, traps, and seals for the return of condensation either to the feed-water heater or direct to the boilers.

Systems of High-Pressure Piping. In general, where several or more engines and boilers are to be installed the boiler and engine leads are connected into a common header. The object of the header is to provide a flexible tie between the various boilers and prime movers to be served in order that any boiler or battery of boilers may be readily cut in or out of service and the load distributed over and carried by the remaining boilers. The header furthermore serves the useful purpose of equalizing the load on the various boilers.

In large plants it is the best practice to provide each prime mover with its complement of boilers separately piped and connected.

A separate header is recommended for the plant auxiliaries.

Several more or less common arrangements for connecting the boilers with the prime movers of the plant are illustrated by Figs. 1, 1*a*, 2, 3, and 4.

It will be noted that provision for expansion by the liberal use of pipe bends is made in each case. All high-pressure valves 6″ and larger should be provided with by-pass.

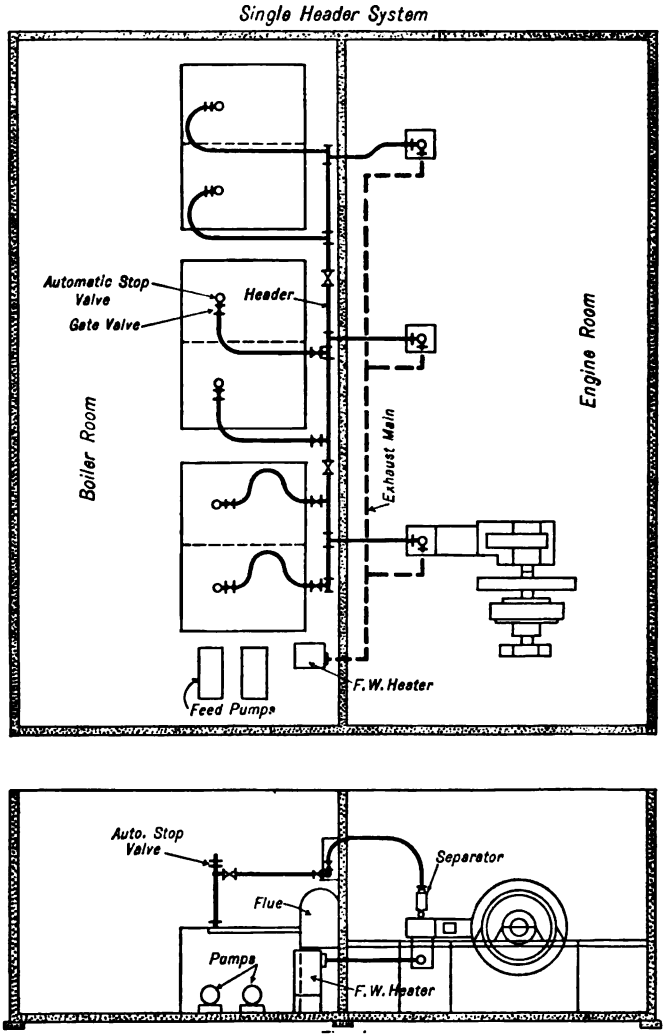

FIG. 1. SINGLE-HEADER SYSTEM.

The system best adapted for the needs of individual cases depends largely upon the size of plant and the character and nature of the load.

Single-Header System. The single-header system, Figs. 1 and 1*a*, is the one generally preferred and more often employed in small and medium-size plants in which the prime movers and boilers may be arranged back to back.

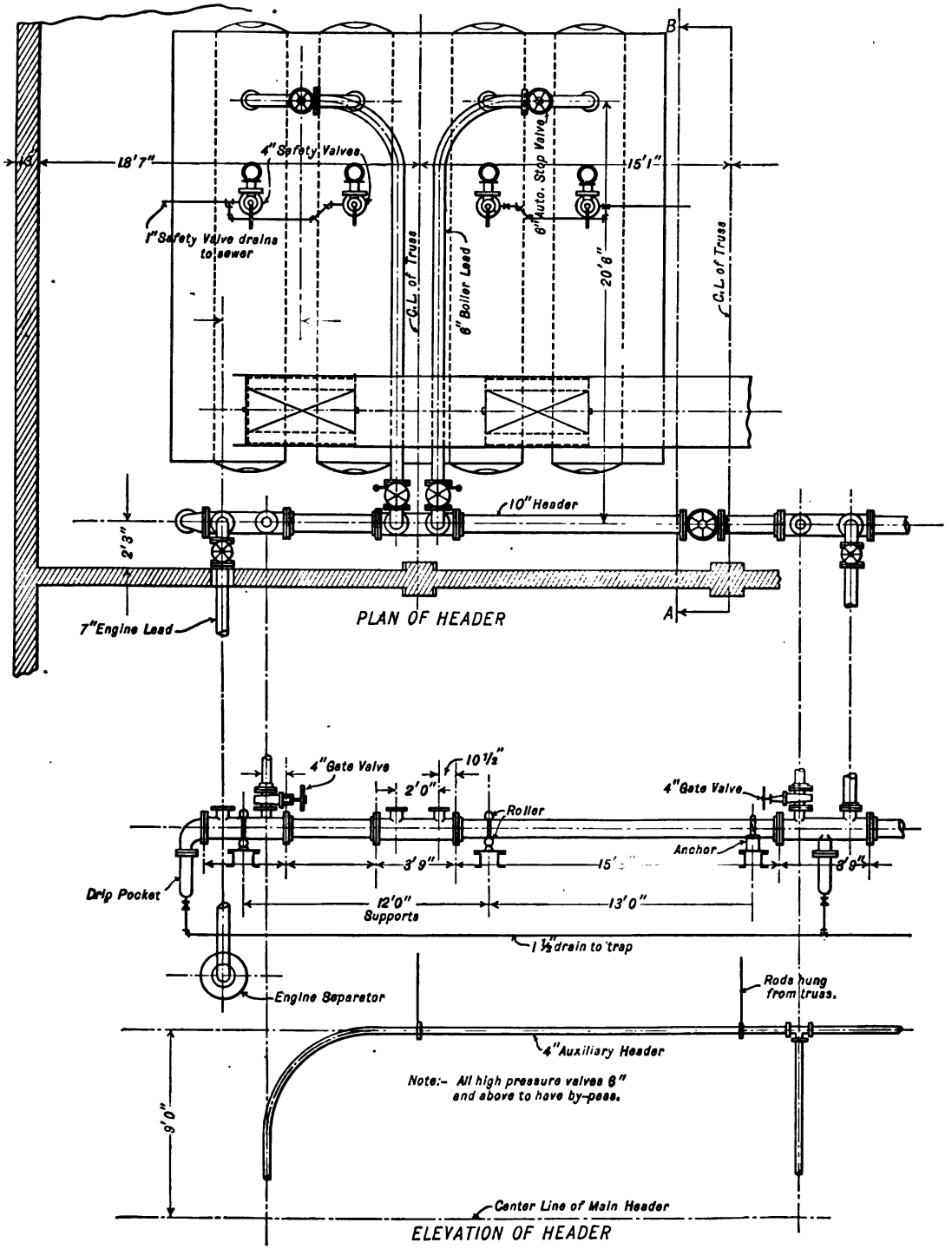

FIG. 1a. PLAN AND ELEVATION OF SINGLE-HEADER SYSTEM.

(See Fig. 6 for sectional elevation.)

This system is the cheapest to install, and when properly designed and constructed makes a satisfactory layout. A valve should be placed in the header between each battery of boilers to provide for cutting out any section desired, in case repairs are necessary, in order to operate the remaining units.

The header in this case need be only slightly larger than the size of the lead to the prime

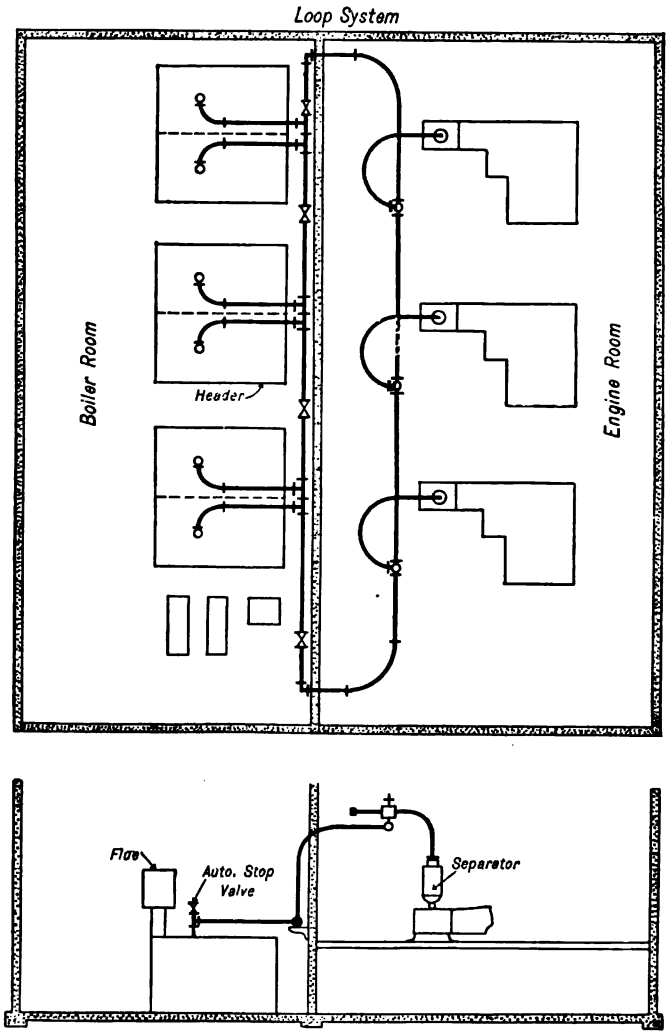

FIG. 2. LOOP OR RING SYSTEM.

mover, as the flow of steam, under normal conditions of operation, is practically direct from the boilers to the prime mover.

The subdivision of the header also makes it possible to divide the station into independent units, which is frequently advantageous for testing purposes.

Details of a single-header system, "back to back" arrangement of plant, for a medium-size plant are shown by Figs. 1*a* and 6.

The Loop or Ring System. This system (Fig. 2) is designed primarily for the purpose of providing a duplicate steam header. In case repairs are necessary for one section of the header,

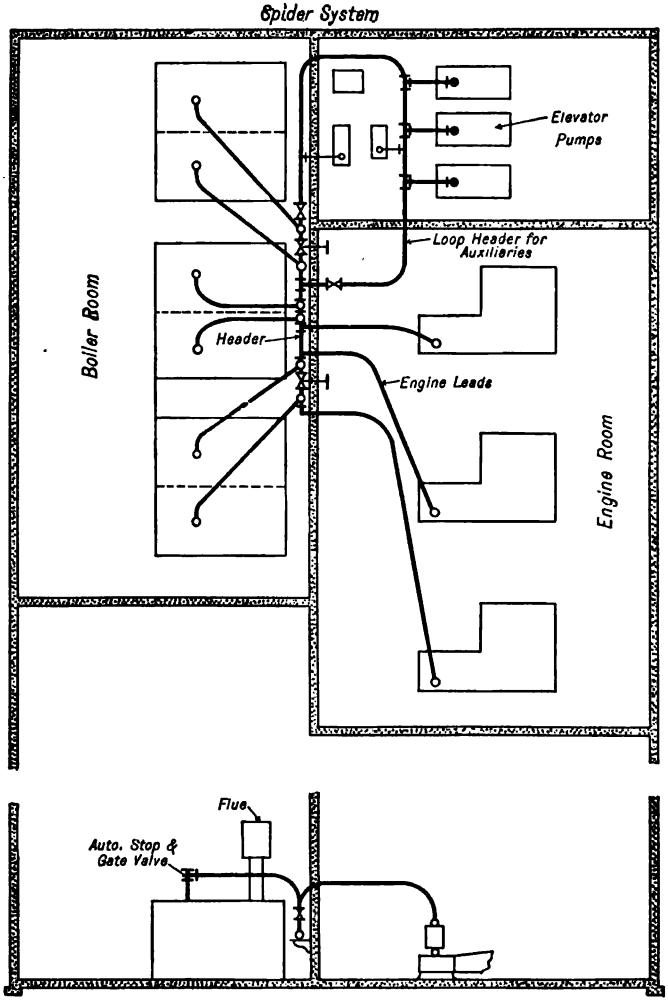

FIG. 3. SPIDER SYSTEM.

this section, if properly valved, may be cut out of service and steam from the remaining boilers delivered to the prime movers in either direction.

The chief disadvantages of this system lie in its excessive cost, inconvenience in making future extension, and large number of joints. When high-grade fittings and valves are used combined with first-class workmanship the extra expense involved does not usually warrant the use of this system. There are, however, special cases in isolated plants for office buildings in

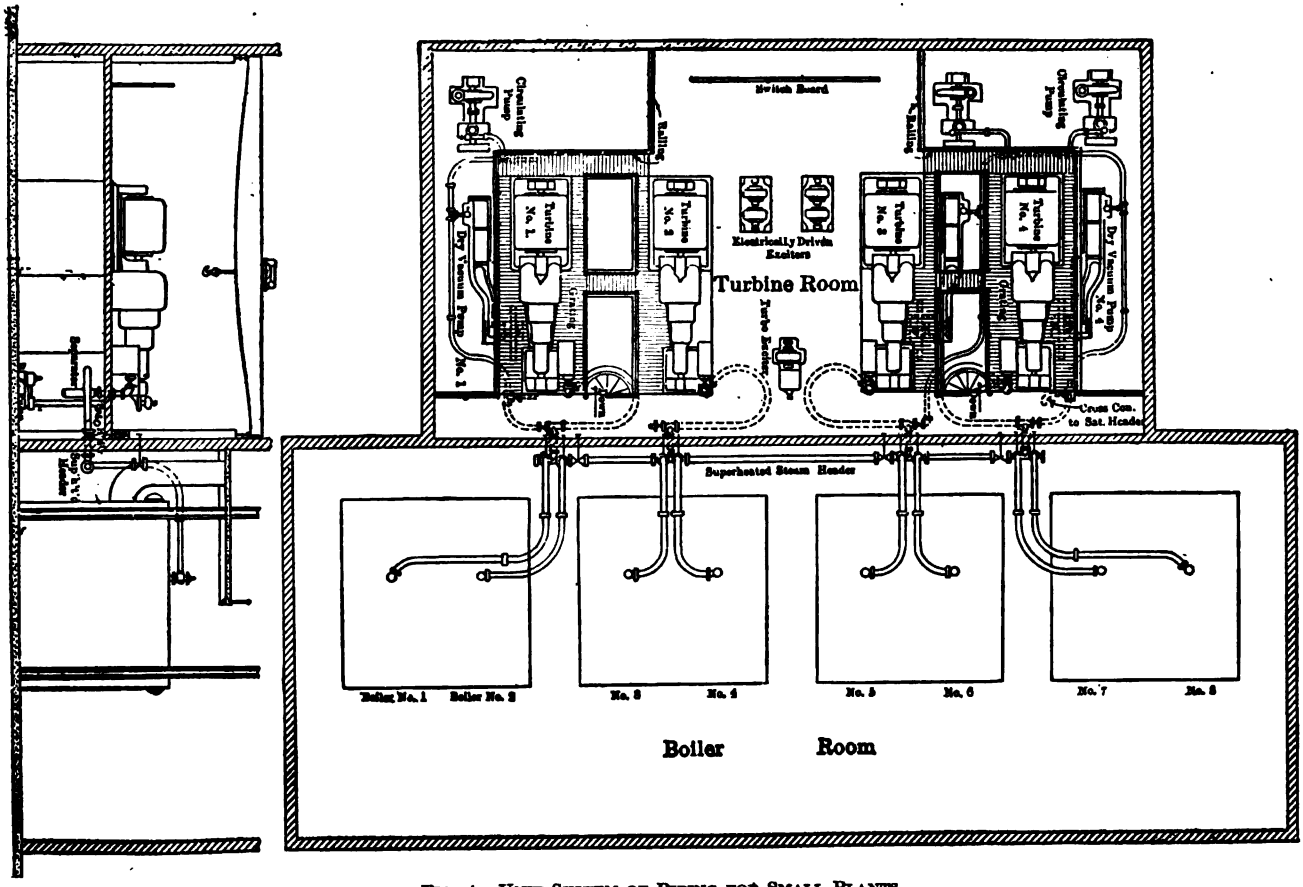

FIG. 4. UNIT SYSTEM OF PIPING FOR SMALL PLANTS.

which, owing to the layout of the engine room in reference to the boilers, the loop system (Fig. 9) may be used to advantage with very little extra expense.

The Spider System. This system (Fig. 3) represents good practice in many small plants. The boiler leads, in this arrangement, are connected to a short header simply long enough to contain all valves and the necessary outlets. The principal advantage of this arrangement is that

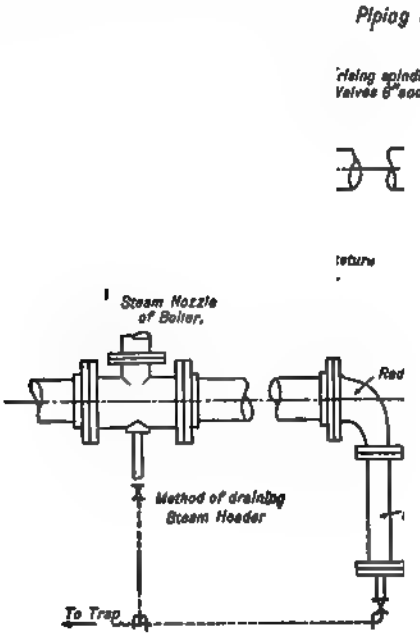

FIG. 5. METHOD OF CONNECTING BOILER TO MAIN HEADER.

it brings all the principal valves close together, simplifying somewhat the operation of cutting in or out the boiler units.

The shortness of the header minimises the dangers of a shut-down and reduces the radiating surface and loss from condensation.

The header valves, if provided with extension stems which run through the wall, may be operated from the engine room.

A welded or cast header, without valving, is sometimes used in this connection. The number of joints, in this case, is a minimum, and for small plants makes a desirable arrangement.

The Unit System. This system is illustrated by Fig. 4, which shows its application to a small or medium-size plant. In this system each prime mover is served by its own complement of boilers. The units are cross-connected by a single-valved header as shown. In large central stations this scheme is frequently expanded to include a separate feed-water heater, pumps, economizers, condenser, and chimney for each unit.

BOILER AND ENGINE LEADS

Automatic Stop Valves for Leads. The boiler lead should be provided with an approved form of automatic quick-closing stop valve.

This valve automatically closes whenever the pressure in the steam header is in excess of that in the boiler, thus preventing the flow of steam from the remaining boilers, in case of a bursting tube or header cap, to the injured boiler.

These valves also act as equalizers of pressure between the boilers, as they remain closed so long as the boiler pressure is lower than that of the header, and when the pressure becomes equal they will open. Figs. 10 and 12 show several forms of this valve. See also the Chapter on "Pipe, Fittings, Valves, etc."

In addition to the stop valve, the boiler lead should also be equipped with a rising steam-gate valve as an additional protection for the man working inside of the boiler when the boiler is cut out of service. The use of rising stem type of gate valves shows, at a glance, whether the valve is open or closed.

Golden-Anderson Double-Cushion Stop Valves. Two valves are shown in Fig. 10. The first has a double dashpot A to cushion the main valve when opening and closing the piston. The space above and between the inner and outer dashpots A and B is filled with live steam through the ports C and E, when the valve disc D rises from its seat, owing to the boiler pressure. This steam in the dashpots cushions the valve in closing. As the full boiler pressure is always above the dashpot A, the valve will close when the pressure decreases on the under side of the valve disc.

A branch pipe connecting with the area between the dashpots (not shown) leads to a point convenient for operating a small bleeder valve from the floor. When the bleeder valve is opened, the pressure between the dashpots is relieved, and as the area of the dashpot piston is greater than that of the main valve disc, the latter is forced to its seat and the steam pressure from the boiler is shut off. This bleeder arrangement gives the operator the opportunity of determining whether the valve is operating without the trouble of closing the valve by the handwheel, which permits of operating the valve as a main stop valve.

The other valve, Fig. 10, is cushioned in both directions and is made positive in operation because of the large area that is effective for the steam pressure, which acts to close the valve in case of its automatic operation. This cushioning is carried out by a double dashpot, which occupies the full area of the upper portion of the body and is to prevent hammering or pounding.

When the steam pressure raises the hollow valve, there exists a space D between the top of the hollow valve and the disc B. This space is filled with steam, which leaks past the disc. The area above the hollow valve is also filled with steam, so that the valve is cushioned both in opening and in closing. To test the valve in service, steam is permitted to exhaust from the cushioning chambers by opening a hand-valve that may be located where convenient. The non-return valve will then automatically close, but by closing the exhaust the non-return valve moves back to the open position ready for automatic action. By screwing in the valve disc by turning the handwheel, the valve can be used as a stop valve, the projection A of the stem coming in contact with the one on the upper side of the valve disc, thus forcing it to its seat. Screwing out the valve stem permits the disc to open automatically.

Jenkins Bros. Automatic Equalizing Valve. The valve shown in Fig. 11 also equalizes the

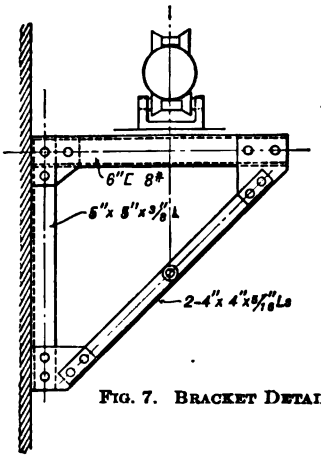

FIG. 7. BRACKET DETAIL

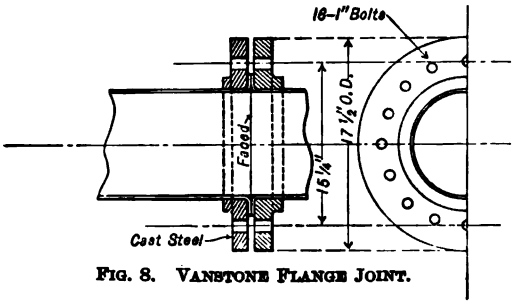

FIG. 8. VANSTONE FLANGE JOINT.

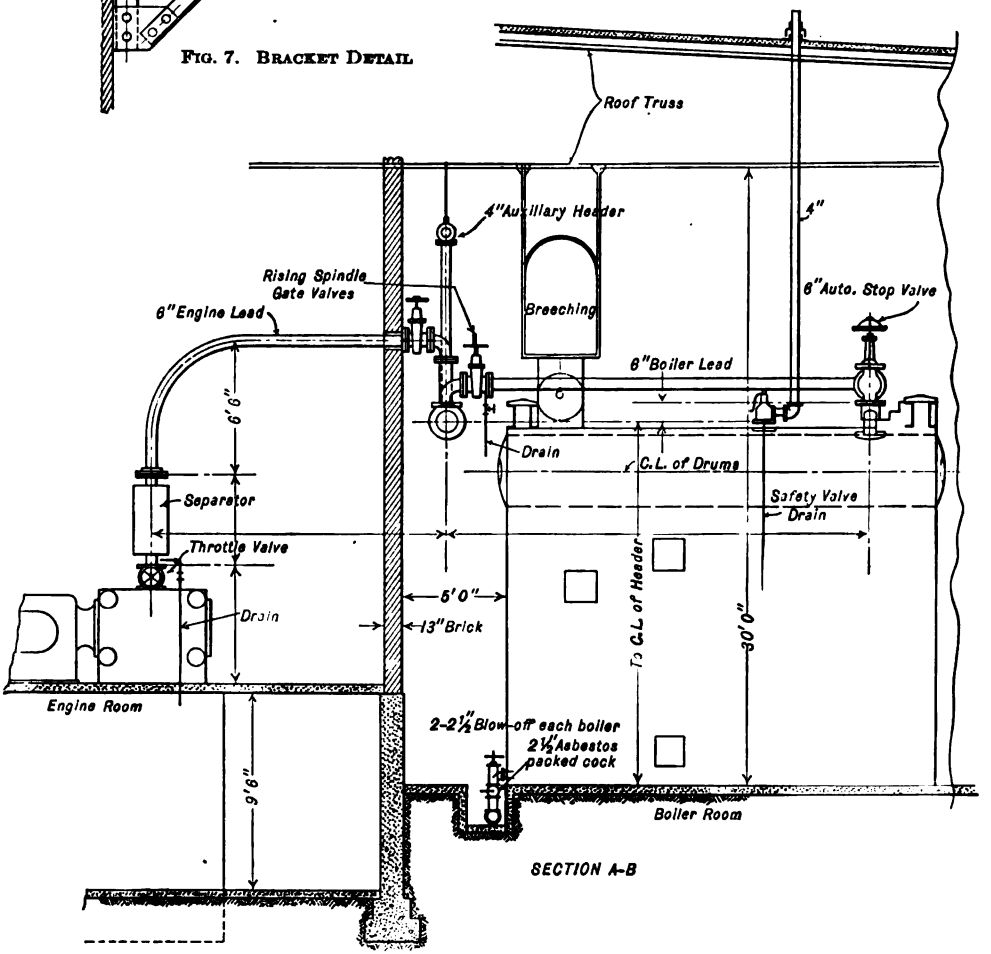

FIG. 6. CROSS-SECTION ELEVATION FOR SINGLE-HEADER SYSTEM.

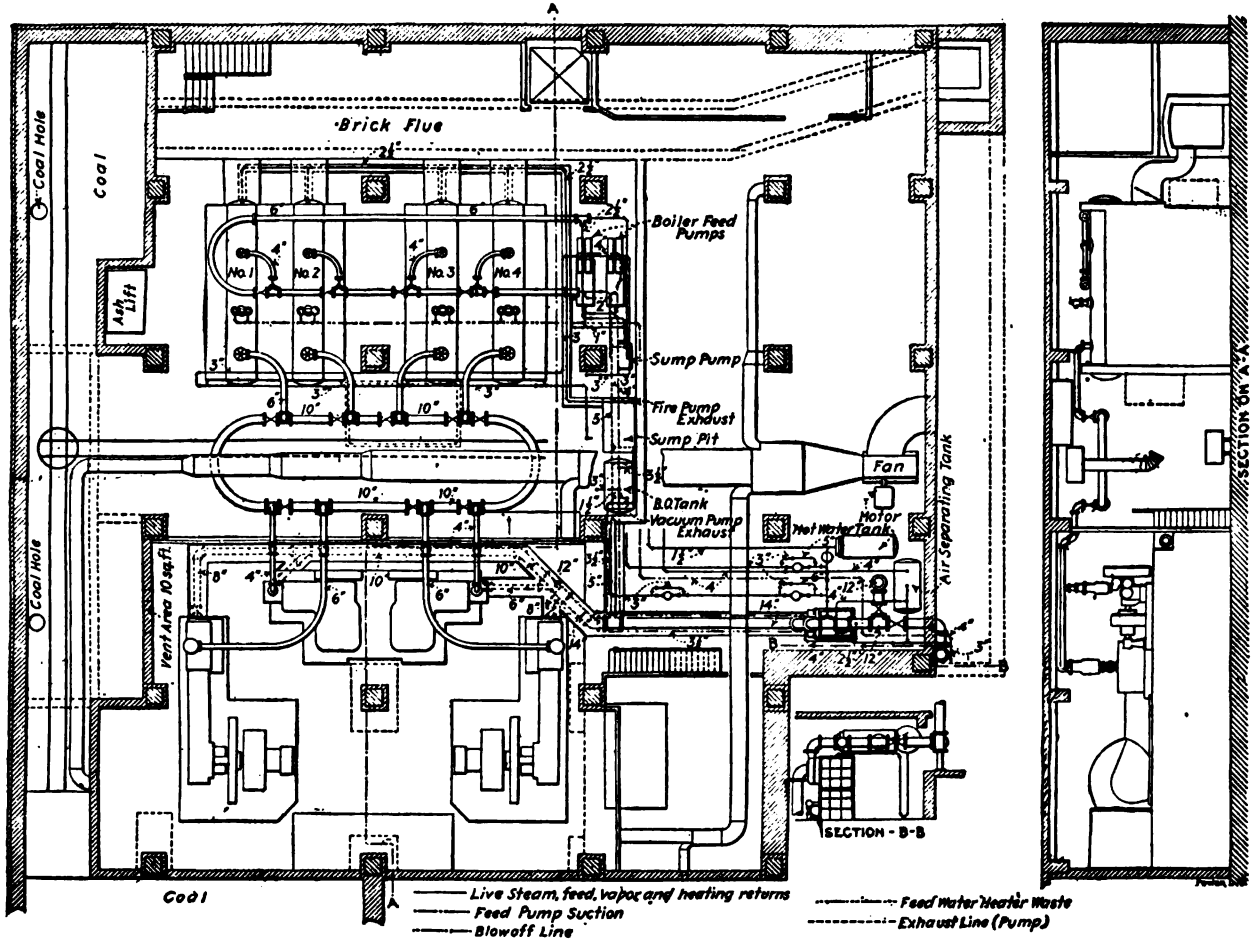

FIG. 9. GENERAL PLAN, SHOWING LAYOUT OF PIPING FOR LOOP HEADER SYSTEM.

Fig. 10. Golden-Anderson Double-Cushion Stop Valves.

Fig. 11. Jenkins Bros. Automatic Equalizing Valve.

Fig. 12. Foster Automatic Non-Return Stop Valve.

pressure between different boilers in a battery, preventing one from working at a lower pressure than another.

The valve action is cushioned by an inside bronze dashpot that prevents the danger of sticking through corrosion. The internal parts of the valve are easily removable after taking off the bonnet. The valve stem can be repacked under pressure while the valve is wide open;

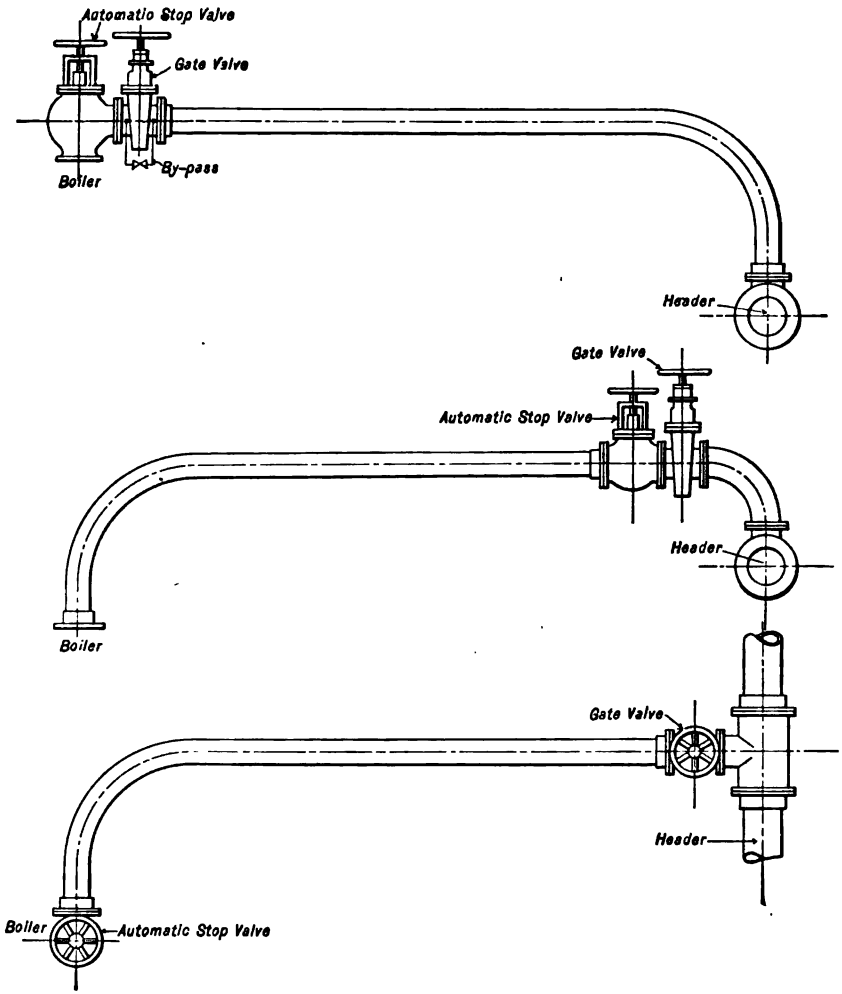

FIG. 13. BOILER LEADS.

the seat ring is removable. The valve can be operated as a hand-stop valve by screwing in the valve stem. The disc has a guide at the bottom.

Size of Engine and Boiler Leads. The size of the boiler and engine leads is ordinarily made the same size, or one size smaller, than called for by the boiler nozzles and steam flanges on the engine or turbine. It was formerly good practice to limit the steam velocity in high-pressure lines to approximately 6000 ft. per minute in modern practice; this velocity, however, is often greatly exceeded. Velocities of 10,000 to 12,000 ft. per minute are not uncommon in this con-

nection for turbines where the flow is continuous. A velocity of 9000 ft. per minute, however, is ordinarily not exceeded when engines are used. Modern practice calls for long-radius pipe bends, either of the U or 90-degree style, to provide for expansion, in all boiler and engine leads.

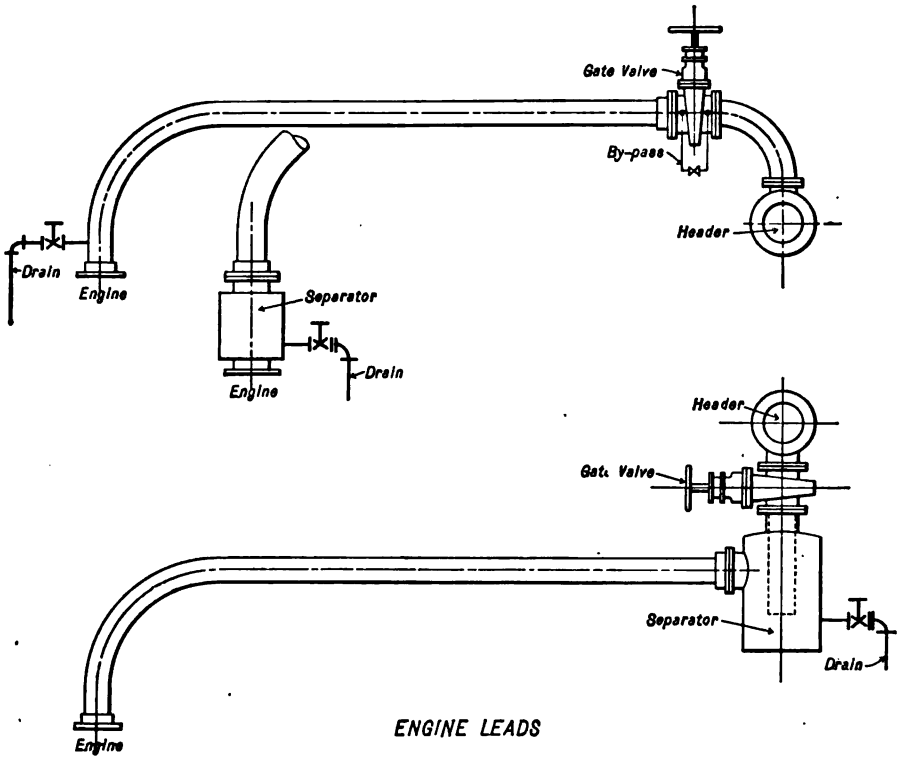

FIG. 14.

Dimensions for standard bends for various sizes of pipe are given by tables in the Chapter on "Pipe, Fittings, Valves, etc."

The minimum radius for bends is six times the diameter of the pipe in order that it will not be too stiff. When short bends are employed extra heavy pipe must be used; they are then rigid and the pipe may buckle. See "Piping Specifications."

Examples in the design of leads are shown by Figs. 6 and 9, in which provision for expansion is made as well as avoiding pockets by the proper location of the automatic stop and gate valve. It is important that the boiler leads drain in the direction of flow whenever possible, and that no pockets are formed in which the water formed by condensation may lodge when the boiler is cut out of service. Placing all valves on the horizontal run prevents the formation of pockets, and is therefore the approved location of the gate and stop valve for all boiler leads.

In order to avoid the necessity of springing bends into place due to inaccuracy of the work and to obtain the best results, the "triple-swing" connection should be used as illustrated by Figs. 13 and 14.

Such a connection permits a swing adjustment to be made on three planes and *must have a horizontal and two vertical joints* on one end of the connection. The joint face at the other end is placed so that the axial line passing through its center will not coincide with the axial center line of any of the three joint faces at the other end of the connection.

Connections to the header whenever possible should be taken off the top to avoid pockets.

Steam Velocities. The following matter relative to steam velocities is an extract from an article by *Wm. F. Fischer*, in the "Practical Engineer," 1912.

"One of the most important features in the design is the rate of steam flow, or the velocity at which the steam is traveling in the piping system. For the general run of power-plant work the following velocities may be employed with good results: 6000 to 8000 ft. per minute for saturated steam, and 8000 to 12,000 ft. per minute for superheated steam.

"In large power stations these velocities are very often increased to 14,000 ft. per minute for reciprocating engines, and 15,000 ft. per minute for steam-turbine work, for superheated steam, depending upon the design and layout of the piping system, the friction losses, and pressure drop. In one of the large central power stations in the eastern States they carry their steam in certain parts of the piping system at not far from 21,000 ft. per minute for steam-turbine work and 15,000 ft. per minute for steam-engine work, with no apparent loss of economy.

"In the general run of power-plant work the main steam header is placed close to the boilers, and the boiler leads, or branch pipes connecting the boilers with main steam header, are short and free from numerous short bends and elbows. As a rule, the boilers and engines are so selected that, as the station load changes, certain engines and boilers may be put in or taken out of service to suit the demands for power.

TABLE 1

SATURATED STEAM TABLES, CONDENSED FROM MARKS & DAVIS TABLES

Column No. 1	Column No. 2	Column No. 3	Column No. 4	Column No. 1	Column No. 2	Column No. 3	Column No. 4
Absolute Pressure, Pounds per Square Inch	Gage Pressure, Pounds per Square Inch	Specific Volume, Cubic Feet per Pound of Steam = S	Density in Pounds per Cubic Foot	Absolute Pressure, Pounds per Square Inch	Gage Pressure, Pounds per Square Inch	Specific Volume, Cubic Feet per Pound of Steam = S	Density in Pounds per Cubic Foot
75	60.3	5.81	0.1721	175	160.3	2.60	0.3843
85	70.3	5.16	0.1937	185	170.3	2.47	0.4052
95	80.3	4.65	0.2151	195	180.3	2.35	0.4262
105	90.3	4.23	0.2365	205	190.3	2.24	0.447
115	100.3	3.88	0.2577	215	200.3	2.14	0.468
125	110.3	3.58	0.2791	225	210.3	2.05	0.489
135	120.3	3.31	0.3002	235	220.3	1.96	0.509
145	130.3	3.11	0.3213	245	230.3	1.89	0.530
155	140.3	2.92	0.3425	254	239.3	1.82	0.549
165	150.3	2.75	0.3633	264	249.3	1.76	0.569

"In proportioning steam pipes it is advisable to assume the worst conditions and fix the pipe sizes and steam velocities accordingly.

"For example: Assume the boilers in a certain plant to be of 450 hp. capacity, normal rating, but subject at times to a 25 per cent overload, over long periods. At 450 hp., each boiler will evaporate approximately $30 \times 450 = 13{,}500$ lb. of water per hour, and at 25 per cent overload each boiler will evaporate approximately $30 \times 450 \times 1.25 = 16{,}875$ lb. of water per hour. In this case the boiler leads should be proportioned on a basis of 16,875 lb. of steam per hour as the maximum weight of steam to be conveyed from one point to another.

"The internal area of pipe for any assumed velocity is readily obtained by substitution in the following formula:

$$A = \frac{144 \times P \times S}{V}$$

$$V = \frac{144 \times P \times S}{A}$$

$$P = \frac{A \times V}{144 \times S}$$

"Where A = area of pipe in square inches.
P = the equivalent weight of steam flowing through the pipe in pounds per minute.
S = specific volume, or cubic feet of steam per pound, at the given pressure.
V = the velocity of the steam flowing in the pipe in feet per minute.

"In steam-engine practice the fact that the steam is, in most cases, taken from the pipe intermittently, due to the cut-off in the steam chest, should be taken into account.

"This is not true, of course, in steam-pump work, where the steam is taken throughout the full stroke, or in steam-turbine work, where the steam flow is practically uniform and constant.

TABLE 2

ACTUAL INTERNAL AREAS OF STANDARD AND EXTRA HEAVY WROUGHT-IRON AND STEEL PIPE

Column No. 1	Column No. 2	Column No. 3	Column No. 1	Column No. 2	Column No. 3
Pipe Size, Inches	Area, Square Inches Standard Weight Pipe	Area, Square Inches Extra Heavy Pipe	Pipe Size, Inches	Area, Square Inches Standard Weight Pipe	Area, Square Inches Extra Heavy Pipe
1	0.86	0.71	8	50.02	45.66
1¼	1.50	1.27	9	62.72	58.43
1½	2.04	1.75	10	78.82	74.66
2	3.36	2.98	11	95.03	
2½	4.78	4.21	12	113.09	108.43
3	7.38	6.57	Outside Diameter		
3½	9.89	8.86	14 x ⅜ thick	137.89	
4	12.73	11.45	15 x ⅜ "	159.48	
4½	15.96	14.39	16 x ½ "	182.65	
5	19.98	18.20	18 x ½ "	238.71	
6	28.88	25.98	20 x ½ "	291.04	
7	38.74	34.47			

"As an example showing the application of the above rule, assume a 500-hp. cross compound condensing engine having a 16-in. diameter high-pressure cylinder, 48-in. stroke, and running at 80 r.p.m., the steam pressure is 170 lb. gage, saturated steam, and the engine consumes about 12 lb. of steam per horsepower per hour. The steam is cut off in the steam chest at ¼ stroke. Assuming a trial velocity of 6000 ft. per minute, steam flow,

$$\text{area of steam pipe} = \frac{(16^2 \times 0.7854) \times (80 \times 2 \times {}^{48}/_{12})}{6000} = \frac{201 \times 640}{6000} = 21.44 \text{ sq. in.}$$

From Table 2 the nearest size pipe is found to be 5 in., having an external area of 19.98 sq. in.

"If the fact that the steam flow is intermittent is taken into account, due to the cut-off in the steam chest, the pipe size may be computed as follows: The steam consumption of the engine is 500 × 12 = 6000 lb. per hour, but as the steam is cut off at ¼ stroke, the steam is taken for each stroke only during ¼ of the time required for the completion of the stroke, and the 6000 lb. of steam will flow through the pipe in ¼ of an hour, or 60/4 = 15 min.

"Therefore the equivalent weight of steam flowing through the pipe in one minute will be 6000/15 = 400 lb. per minute = P.

$$A = \frac{144 \times P \times S}{V} \quad \ldots\ldots\ldots\ldots\ldots \quad (1)$$

and substituting 2.47 for S, 6000 for V, and 400 for P, we get:

$$A = \frac{144 \times 400 \times 2.47}{6000} = 23.73 \text{ sq. in.}$$

From Table 2, in Column 2, this area is found to lie between a 5-in. pipe, having an internal area

of 20 sq. in., and a 6-in. pipe, having an internal area of 29 sq. in. The velocity in the 5-in. pipe is found to be:

$$V = \frac{144 \times P \times S}{A} = \frac{144 \times 400 \times 2.47}{20} = 7114 \text{ ft. per min.}$$

and the velocity in the 6-in. pipe to be:

$$V = \frac{144 \times 400 \times 2.47}{29} = 4906 \text{ ft. per minute.}$$

"Where the steam pipes to engines connect to receiver-type separators having a cubic capacity at least three times or more that of the high-pressure cylinder, the steam connection from the separator to the engine may be made the full size as called for by the engine builder, and the steam pipe supplying the separator may be made considerably smaller, as the steam flow is more uniform when a separator is used.

"In all cases, the separator should be placed as near the engine throttle as possible. The object of the receiver-type separator is to provide a full supply of steam close to the engine throttle, from which the engine may draw its supply for any sudden increase in load, without causing an excessive drop in pressure at the engine throttle. The separator also provides a means of cushioning the steam near the engine throttle, thus preventing vibrations and hammering in the piping system, caused by the stopping and starting of the steam flow with every movement of the engine valve. With a large separator placed in the line close to the engine valve, the flow of steam from the boilers to the engine is more rapid and uniform, as the steam expands, to a slight extent, in the separator every time the valve opens.

"In the above example, if we assume a large receiver-type separator to be placed near the engine, we could assume a steady rate of flow in the direction of the engine, but to be on the safe side, assume a uniform rate of flow in the engine-supply pipe, for say ¾ of the stroke. On this assumption the 6000 lb. of steam per hour required by the engine will flow through the supply pipe in ¾ of an hour, or $3 \times 60/4 = 45$ min., and the equivalent weight of steam flowing per minute will be $6000/45 = 133$ lb.

$$A = \frac{144 \times P \times S}{V} = \frac{144 \times 133 \times 2.47}{6000} = 8 \text{ sq. in.}$$

"From Table 2 this area is found to lie between a 3-in. and 3½-in. diameter, standard weight pipe."

Steam Headers. The former practice of using a header of large diameter, to act as a receiver, is no longer considered essential. High steam velocities permitting the use of smaller pipe, and thus reducing the radiation loss to a minimum, are now considered the best practice.

The steam header, when the "back to back" arrangement is employed with a "single-header" system, may have an area equal to the area of the largest engine or turbine lead or equal to the combined areas of the boiler leads which are necessary to supply this unit. If, however, the engines and boilers are located on opposite ends of the header so that all of the steam used must pass through one section of the header, the area of the header should be figured for an allowable steam velocity of 8000 to 9000 ft. per minute.

In the "loop system" the header area should be figured to handle approximately one-half of the total steam.

The header should be carried by rigid supports, to prevent sagging, approximately 12 ft. on centers and resting on rollers to allow for expansion. The header should be securely anchored to the center support so that the expansion will be equally divided. The header should be dripped at the ends and at one or more intermediate points, unless a short header, 40 ft. or less, is used.

Rising spindle-gate valves are placed in the header between each battery of boilers. The wall brackets carrying the header may also serve as a support for the walk, from which the

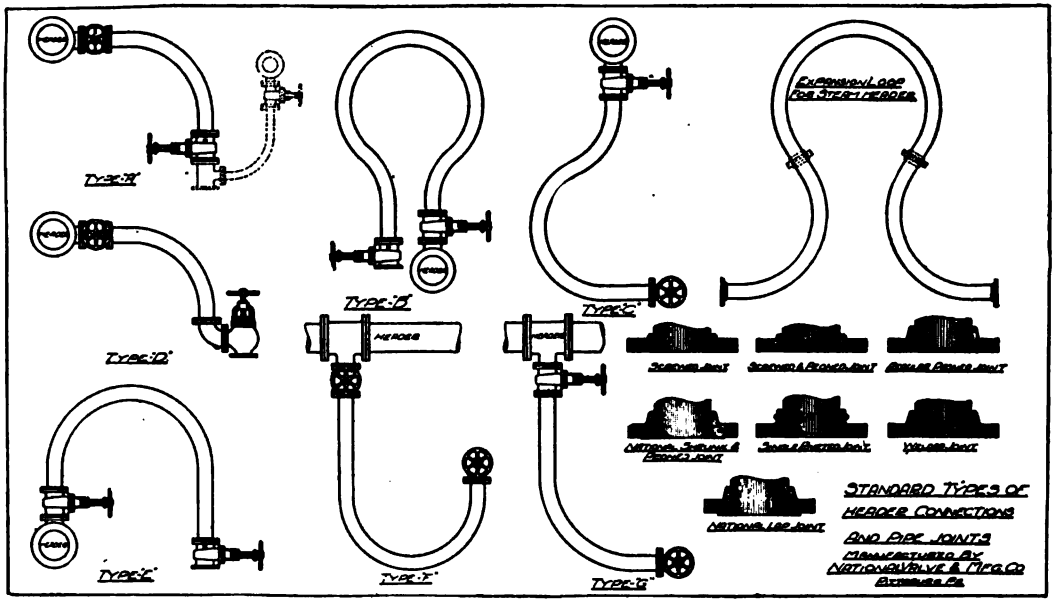

FIG. 15. HEADER CONNECTIONS AND PIPE BENDS.

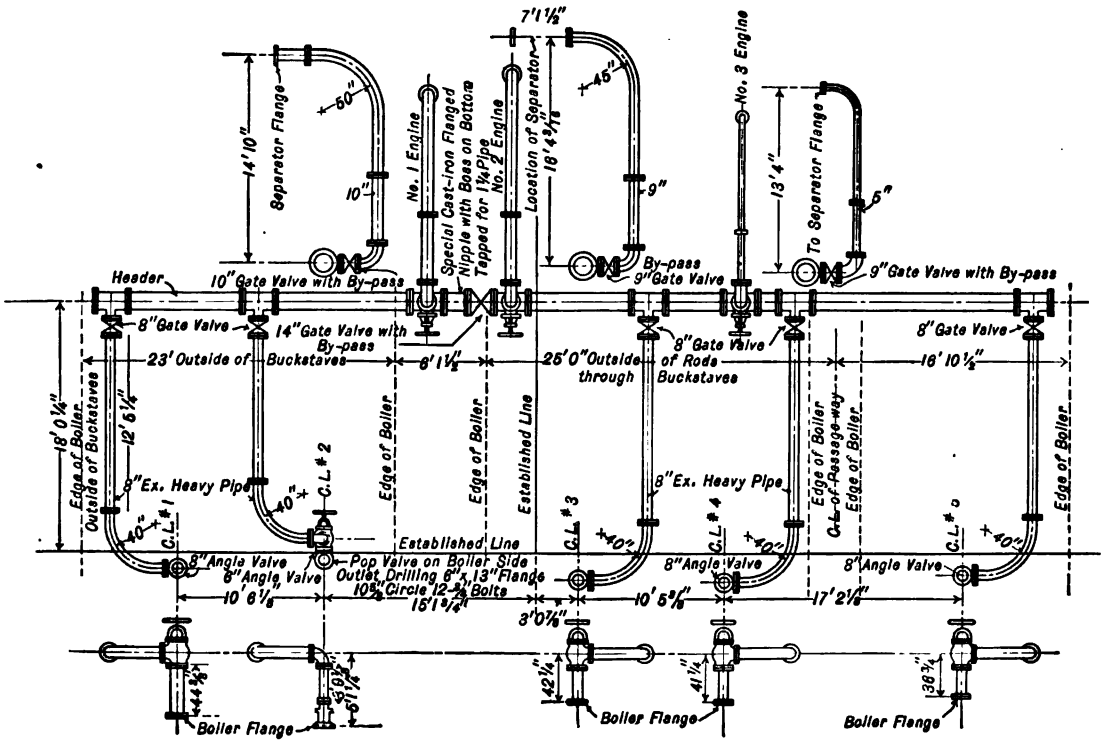

FIG. 15a. STEAM PIPING DETAILS.

header valves may be readily reached. When superheated steam is employed it is customary to provide a separate header to supply saturated steam to the plant auxiliaries.

Auxiliary Header. An auxiliary steam header is frequently provided to take care of the pumps, fan and stoker engines, tube cleaners, soot blowers, etc.

This header is connected to each boiler if superheated steam is to be supplied the main units and saturated steam to the auxiliaries. If saturated steam is to be employed for operating the main units, the auxiliary header is usually connected to the main header as shown by Figs. 1*a* and 6 in small and medium-size plants. The size of this header may be made equal to the combined area of steam connections of the stoker engine, pumps, and fan engine.

EXHAUST AND FEED-WATER LINES

Exhaust Piping. The connection between each engine or turbine and exhaust main should be provided with a gate valve in order to isolate completely the unit when repairs are necessary. Pipe bends are not in general employed in the exhaust lines about a non-condensing plant.

In condensing plants the vital importance of a tight exhaust line should not be overlooked, as a very small leak will often reduce the vacuum very materially.

The connection between the engine or turbine and the condenser should be short and direct, with the fewest possible number of joints.

In calculating the size of exhaust pipe for non-condensing units a velocity of 8000 to 9000 ft. per min. may be used and 20,000 to 24,000 ft. per min. for condensing units.

The extremely high velocities are permissible in this connection due to the fact that the friction-pressure loss is a function of the weight of steam flowing in a unit of time; the less the density the greater may be the velocity for the same pressure loss. See formula, "Flow of Steam Through Pipes," in the Chapter on "Water, Steam and Air."

Feed-Water Piping. The size of the feed main is usually made the same size as called for by the discharge flange of the feed pump, the connections to the boiler as specified by the boiler manufacturer. The velocity of the water should be limited to about 400 ft. per minute.

Feed lines should be made either of extra heavy pipe or brass pipe due to the corrosive action of hot feed water. Cast-steel threaded flanges give better results on the feed main than the ordinary cast-iron flange. Feed valves should always be of the globe pattern, as gate valves cannot be closely regulated and clatter owing to the pulsations of the reciprocating feed pumps. A feed, check and stop valve should be provided for each feed connection to a boiler.

Fig. 16 shows the location of these valves and the feed main below the boiler room floor and

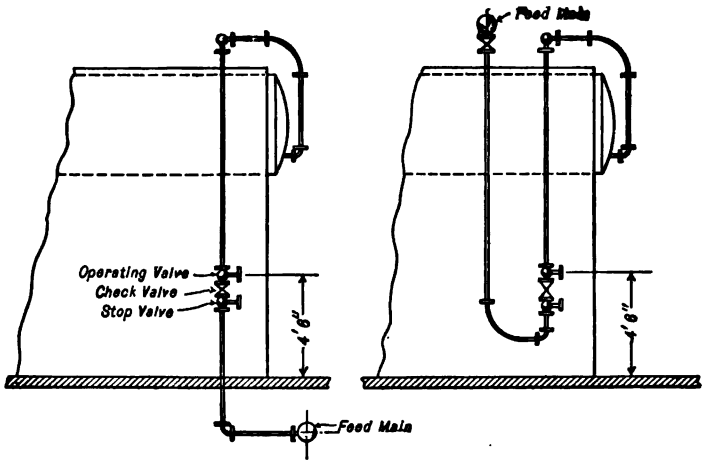

FIG. 16. FEED PIPING CONNECTIONS.

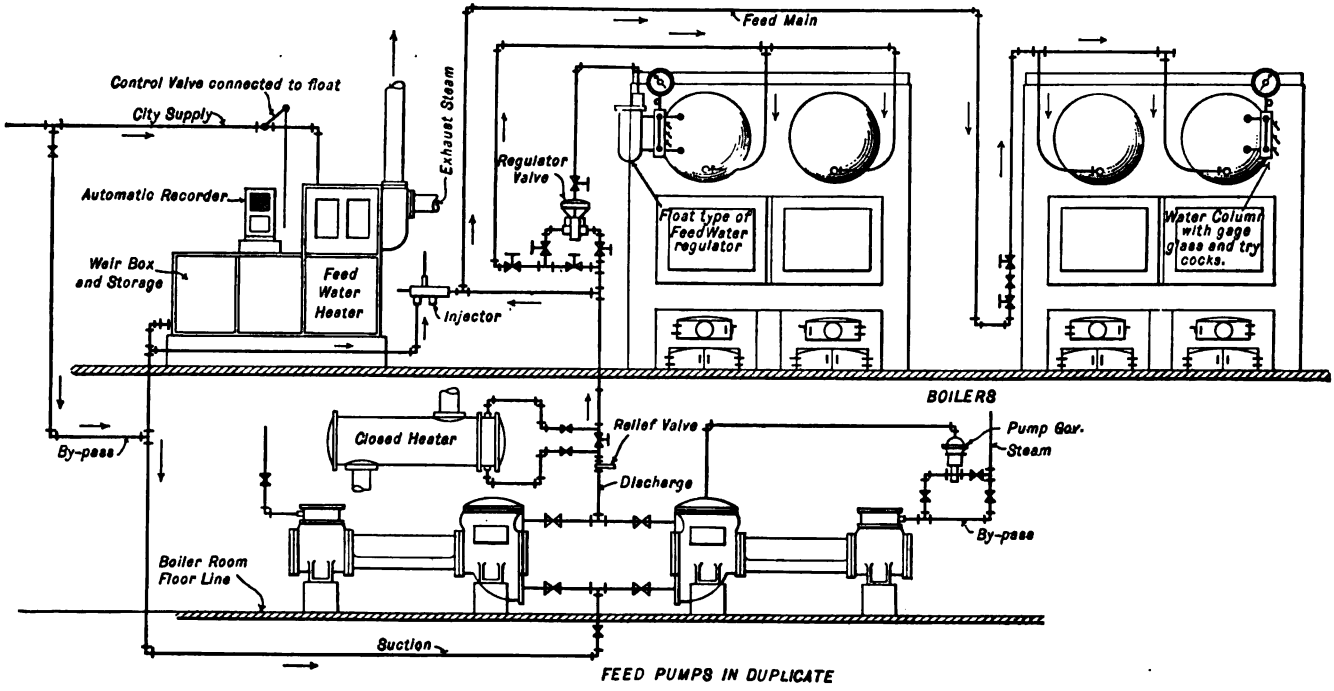

FIG. 17. FEED-WATER PIPING.

over the boilers. The operating check and stop valve may be located as high as the feed main will permit, if desired, and an extension handle used on the operating valve.

Fig. 17 shows the feed main located above the boilers with hand regulation for one boiler and automatic regulation for the other. The sketch shows the feed pumps installed in duplicate equipped with pump governors. A relief valve should be provided on the discharge from pumps as indicated.

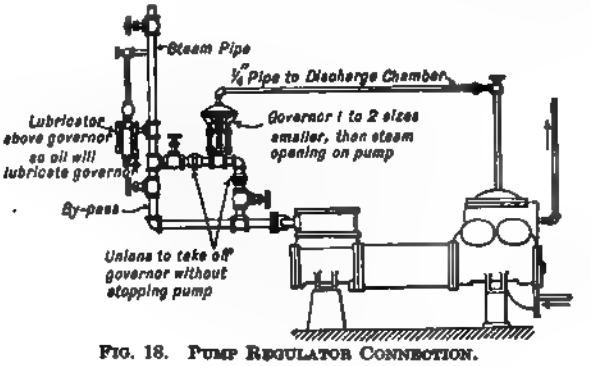

FIG. 18. PUMP REGULATOR CONNECTION.

to Boiler

FIG. 19. DETAILS OF THERMOFEED—FEED-WATER REGULATOR.

Unless the water is delivered to the feed-water heater from a supply main under pressure an additional pump will be necessary, or one of the pumps shown may be utilized for this purpose, and an injector installed in place of a spare pump. The feed-water heater should be elevated so that the feed pump receives the water under a head.

If a water-back at the bridge wall is employed this is connected to the feed connection to each boiler and also to the blow-off main.

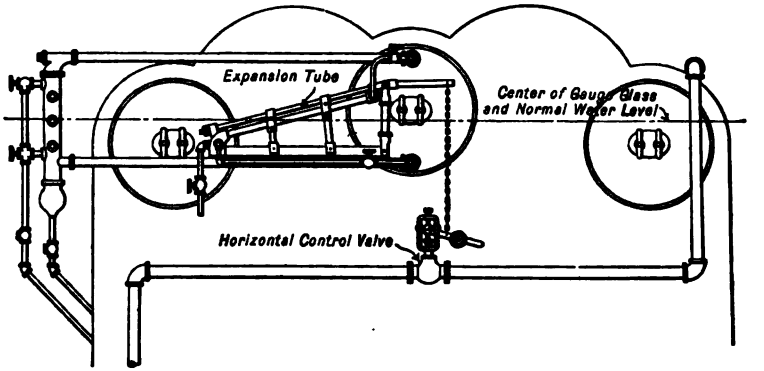

FIG. 20. IMPROVED COPES WATER REGULATOR INSTALLED TO GIVE CONTINUOUS FEED WITH LOW-WATER LEVEL AT HEAVY LOAD, AND HIGH-WATER LEVEL AT LIGHT LOAD.

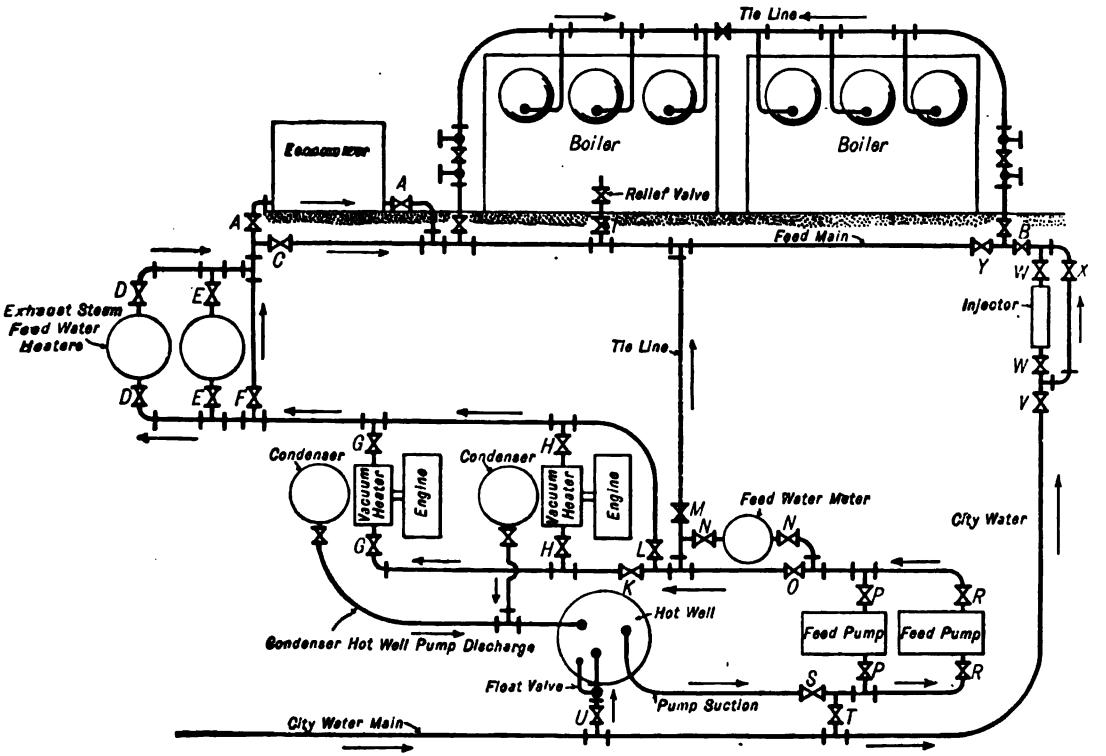

FIG 21. FEED-WATER PIPING FOR A CONDENSING PLANT.

FIG. 22. ARRANGEMENT OF BOILER BLOW-OFF.

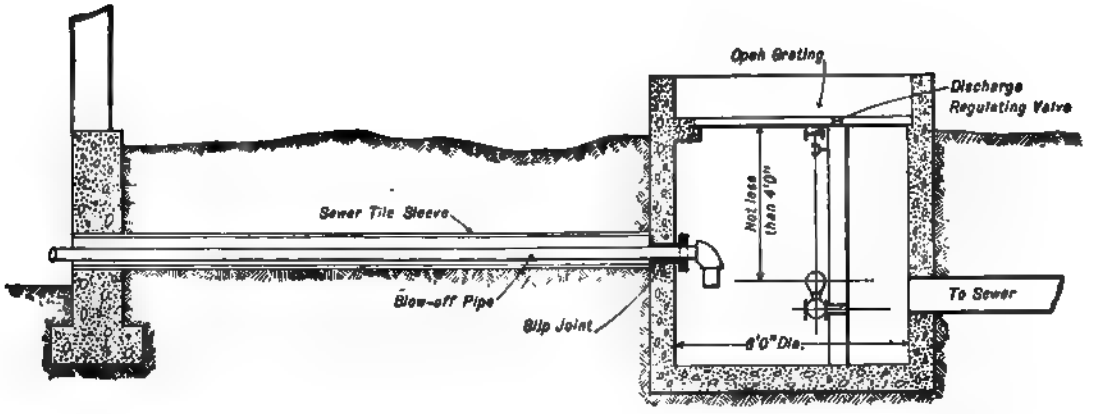

FIG. 23. BLOW-OFF SUMP OR WELL.

FIG. 24. BLOW-OFF SUMP.

Fig. 25. Details of Feed-Water and Exhaust Piping.

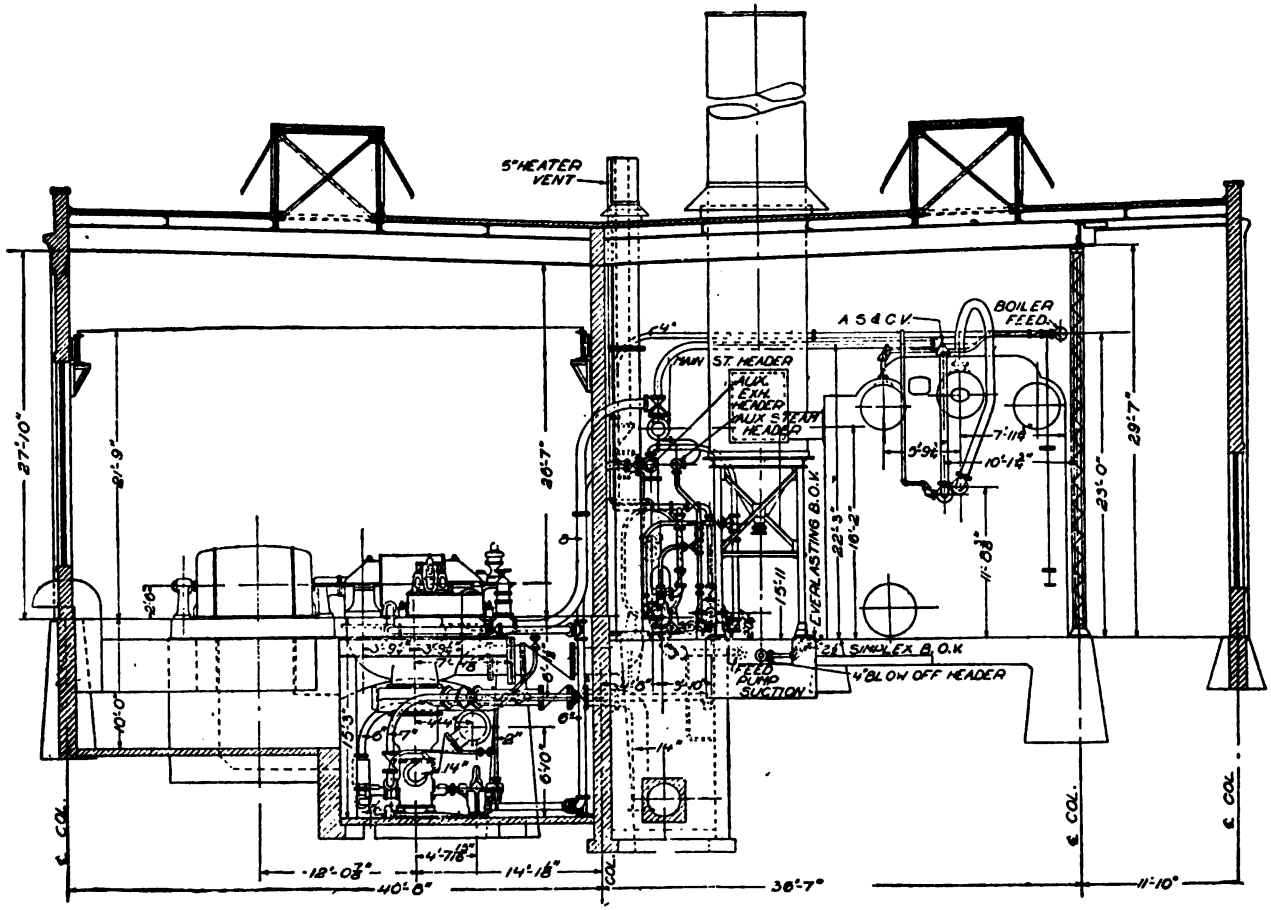

FIG. 26. SECTION THROUGH ENGINE- AND BOILER-ROOM.

Fig. 18 shows in detail the method used in connecting the regulating valve to feed pump. Fig. 19 shows a typical feed-water regulator of the float type and accompanying regulating valve. Fig. 20 shows the *Copes* expansion tube regulator.

Feed-Water Piping System for Condensing Plants. A system of feed-water piping for a condensing plant is shown by Fig. 21. The plant shown contains two engines or turbines each with an independent vacuum closed-type heater, surface-condenser hot-well pump and air pump.

There are two boiler-feed pumps, two auxiliary feed-water heaters of the closed type, and an economizer.

The exhaust from the pumps, stoker and fan engine, and any other auxiliary steam apparatus used in the plant, is delivered to the exhaust-steam feed-water heater. The exhaust from the main units first passes through the vacuum heaters before reaching the condensers. The condensed steam is pumped to a hot well, from which the feed pumps draw their supply.

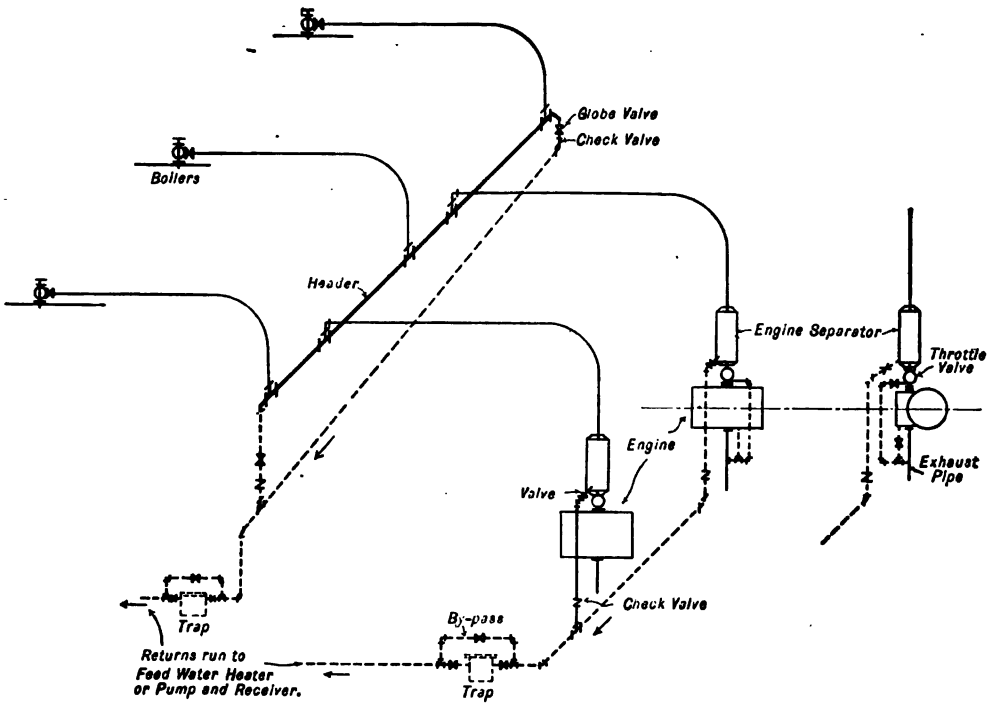

FIG. 27. DRIP ARRANGEMENT FOR HIGH-PRESSURE PIPING.

Safety Valves. Safety valves are furnished with the boiler, the size being given in the boiler tables.

It is recommended practice to pipe each safety valve independently to the atmosphere, although in the majority of small plants they are allowed to blow direct in the boiler room.

Each safety valve should be provided with an open drain to the sewer with no valves in the line.

Blow-off Valves and Piping. The blow-off valve or valves are ordinarily furnished with the boiler, the size being given in the boiler specification. The blow-off valve is usually of the angle style, having renewable disc or seat.

In addition to the regular blow-off valve, each blow-off connection should be provided with

an additional emergency valve. If the arrangement of valves as shown by Fig. 22 is used the emergency valve may be used as a washout by removing the bonnet. An asbestos-packed cock is frequently used in place of the upper valve shown.

The blow-off line cannot be connected direct into the city sewer, but must terminate in a closed tank, properly vented, or an open top concrete sump, which is drained to the sewer. See Figs. 23 and 24.

The blow-off pipe to the sump should be enclosed in a tile sewer to readily permit of its removal.

Figs. 25 and 26 show piping details for a medium-size plant taken from the "Practical Engineer," August, 1915. The reader is referred to the Chapter on "Arrangement of Steam Power Plants," in which appears a number of typical power plant piping arrangements.

High-Pressure Drips. High-pressure drips include the drainage of all piping under practically boiler pressure, as headers, steam separators and high-pressure mains. These drips being free from oil may be returned either direct to the boiler or to the feed-water heater, as may be desired, by means of traps, pumps, or the *Holly* steam loop.

The size of drip pipes for separators is usually fixed by the outlets left by the manufacturers. The main header drips are ordinarily made ¾" to 1". Throttle and engine drips are ordinarily made ½".

Where drips are widely separated individual traps should be provided, as the difference in pressure frequently causes backing up of the water in the drips farthest from the boiler. A check valve should be placed on each drip when two or more are connected into the same trap.

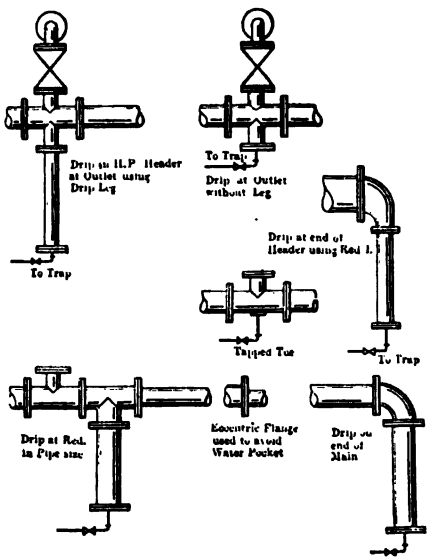

FIG. 28. DRIP DETAILS.

The Holly Steam Loop (Fig. 29). If a closed vessel or tank is placed above the boiler and connected to it by two pipes, one to the water and the other to the steam space, the pressure in the vessel will be the same as that in the boiler and the water in the pipe will stand at the same level as that in the boiler. If the valve on the vent pipe of the closed vessel is opened, the pressure will be lowered and water will rise in the one pipe to such a height that the added weight counterbalances the difference in pressure between the boiler and the tank, and steam will flow through the other pipe into the vessel in its effort to equalize the pressure. If the steam rising to the closed vessel holds water in suspension, the water will be swept along with the steam and discharged into the chamber, where it falls to the bottom and flows into the pipe connected to the water space, thus increasing the head of water in the return line.

As the extra head of water overbalances the increase in its height, due to the difference in pressure between the boiler and the closed vessel, the water will flow into the boiler until the water in the pipe reaches its former level. This action causes the slugs of water and steam to rise from the receiver to the discharge tank, and, to further aid the system, a check valve is placed near the boiler in the return line, which prevents the water from rising in the return line of the other side of the system should it be closed for any reason.

Connections are made to the bottom of the steam line at all points where it is possible for water to settle, and the condensation is carried to a receiver located below the lowest point of the steam line; there is also a ½-in. equalizing steam line connected to the receiver from the

main steam line. From the bottom of the receiver is connected a 1½-in. riser, in which long bends are used in place of ells and through which the slugs of water and steam rise to the discharge tank located 35 ft. above the water-line of the boilers. In this tank the water and steam enter the top and the return to the boiler is taken from the bottom.

There is a ¾-in. vent pipe taken from the top of the discharge chamber and run down to the exhaust pipe or heater with a regulating valve and a telltale placed in such position that it can be readily seen.

The use of the vent pipe is to take off any air or non-condensible vapors and also to reduce the pressure in the discharge tank. As this vent may be connected to the heater, any steam blowing through the regulating valve is utilized in heating the feed water.

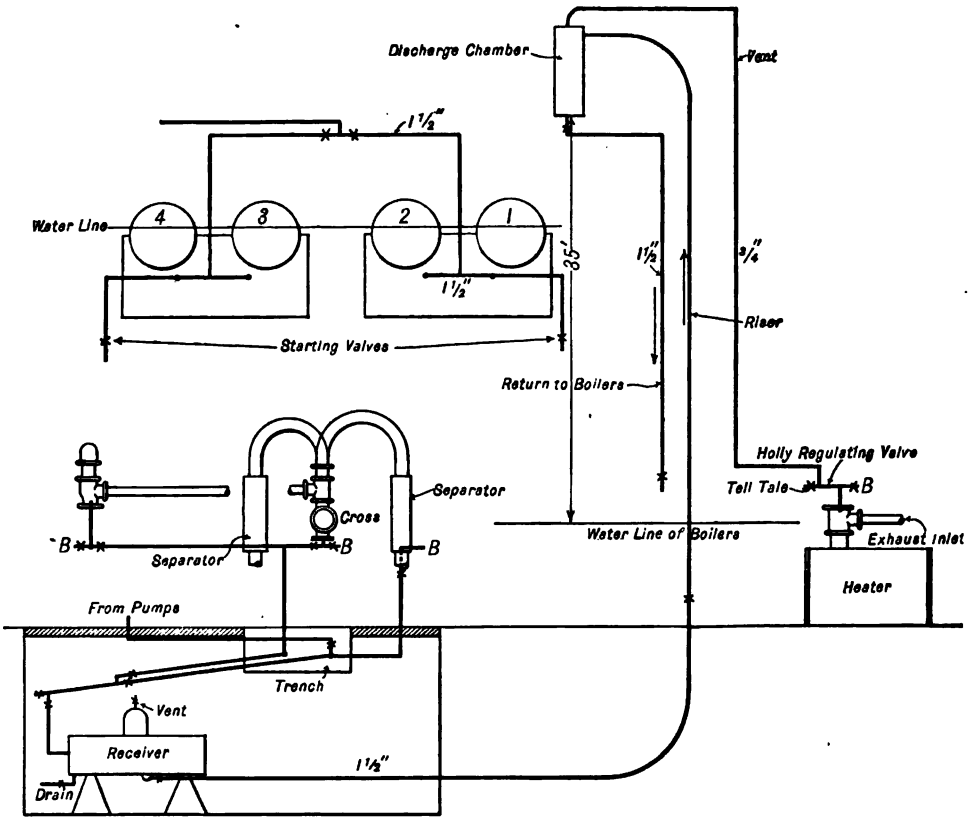

FIG. 29. THE HOLLY STEAM LOOP.

Fig. 30 shows the layout for a steam loop and return system described by *G. C. Hawkins* in "Power." No traps are used in this system.

PIPING SPECIFICATIONS*

Power-house steam-piping specifications may be considered in the classes, namely: Plants operating with saturated steam not exceeding 125 lb. per sq. in. gage: plants operating with saturated steam up to 250 lb. pressure, and plants operating with superheated steam.

*All figures referred to under this heading will be found in the Chapter on "Pipe, Fittings, Valves, etc."

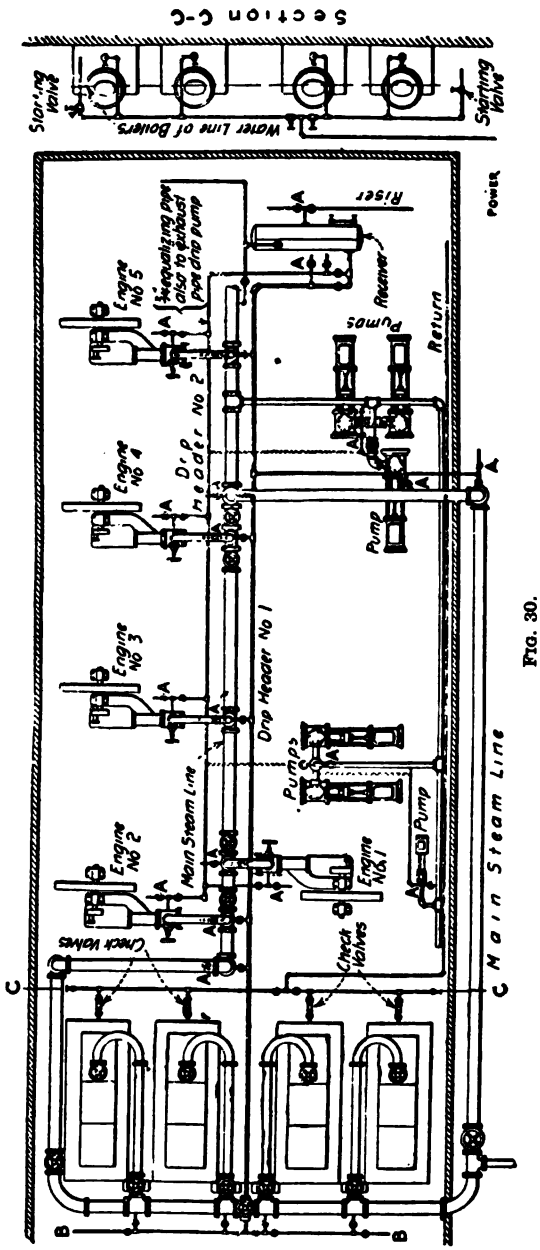

FIG. 30.

Recommended practice in the choice of materials, type of fittings, joints and valves for the several classes of service enumerated follows. These specifications are an extract from the practice of the *Walworth Mfg. Co.*

Specification No. 1—Steam Pressure 125 Pounds—Saturated

This specification covers material recommended for steam plants operating with saturated steam at pressures up to 125 pounds per square inch.

Steam Lines. *Pipe.* High-pressure steam and drip pipe to be wrought steel, lap-welded. Sizes 12″ and smaller to be full card weight. Sizes 14″ O. D. and larger ⅜″ thick or heavier, depending on size and operating pressure. Do not use riveted headers.

Bends. Pipe for bends to be no lighter than for straight lengths. Bends to be finished accurately to dimensions, so they need not be forced into position, except in cases of expansion bends, which should always be cut shorter than dimensions and drawn into place, then when the line heats the bend will expand into place and fit properly. It is sometimes desirable also to cut straight lengths short, to provide for expansion. Bend on a long radius to permit the greatest elasticity (when bent on a short radius heavy pipe must be used—they are then rigid and the pipe may buckle). Bends always to be cut off, flanged, and finished after bending.

Flanges for Pipe and Bends. Sizes 3½″ and smaller to be standard weight cast-iron threaded type, screwed on and refaced. For pipe 4″ and larger to be standard weight attached by the *Vanstone* method. (This style of flange is much superior to the threaded flange, and for large pipe it is recommended exclusively.) It is made of cast iron, malleable iron and steel.

Fittings. Sizes 2½″ and larger to be standard weight cast iron, flanged; 2″ and smaller, standard cast iron threaded. Dimensions of flanged fittings to conform to standards known as the "American Standard of 1915." See the Chapter on "Pipe, Fittings, Valves, etc."

Nozzles. Where outlets on headers are very close, and it is not desirable to use two or more fittings bolting together or a manifold fitting, use nozzles welded into the header

pipe. These should be steel throughout, or made of pipe fitted with malleable or steel flanges.

Valves. Sizes 2″ and larger, except stop and checks and other specialties, to be iron-body, flanged, gate or angle valves, standard weight, O. S. & Y.; large sizes fitted with by-pass.

The seating faces of discs and the seat rings to be renewable bronze; bonnet to be arranged for back seating when the valve is open for packing under pressure.

Valves 1½″ and smaller to be all bronze.

Separators. To be the welded receiver type; constructed of steel throughout, seamless and without rivets, complete with drain trap, etc.

Specialties. The market provides many satisfactory specialties, such as non-return valves, pressure regulators, etc.

Facing. Flanges, except as otherwise specified on pipe, valves, and fittings, to be faced straight across, rough finished.

Drilling. Templets to be the "American Standard of 1915."

Bolts. Square head with cold-punched hexagon nut.

Gaskets. "Durabla," $^1/_{16}$″ thick, cut in rings to fit inside the bolt holes.

Unions. On small threaded lines use unions whenever necessary to insure quick repairs and at all valve connections.

Supports. Not more than 12-ft. centers, designed to provide for movement in all directions; use substantial anchors where necessary.

Drainage. At frequent points install drip pockets or tap fittings and furnish traps to dispose of the condensation as desired (*i.e.*, return it to the boiler, discharge it into the heater or into the blow-off tank).

Boiler-Feed Lines. *Pipe and Bends.* Feed-water pipe from pumps to boilers to be full weight, lap-welded, wrought steel or iron. Use brass pipe if the quality of water demands it. (It is sometimes necessary to use extra strong pipe to insure longer life.) Bends to be manufactured as described for steam lines.

Flanges for Pipe and Bends. To be standard weight cast iron, screwed on and refaced; for large sizes use Fig. 14, *B*, p. 488 type.

Fittings. Sizes 2½″ and larger to be standard weight cast iron, flanged; sizes 2″ and smaller, standard, cast iron threaded. Elbows, long radius. Dimensions of flanged fittings to conform to the "American Standard of 1915."

Valves. Sizes 2½″ and larger, except checks and feed valves (globes) to be iron-body, flanged, gate or angle valves, standard weight, O. S. & Y., with bronze stems. The seating faces of discs and the seat rings to be renewable bronze; bonnet to be arranged for back seating when the valve is open for packing under pressure.

Valves 2″ and smaller to be all bronze.

Facing. Flanges on pipe, valves, and fittings to be faced straight across, rough finished.

Drilling. Templets to be the "American Standard of 1915."

Bolts. Square head with cold-punched hexagon nut.

Gaskets. Corrugated lead about $^1/_{16}$″ thick, cut in rings to fit inside the bolt holes.

Unions. On small threaded lines use brass ground-joint unions wherever necessary to insure quick repairs and at all valve connections.

Supports. Not more than 12-ft. centers.

Exhaust Lines. *Pipe.* Except cast iron, to be lap-welded wrought steel, sizes 12″ and smaller standard weight; 14″ to 20″ O. D., ¼″ thick. Sizes 22″ and over not less than ¼″. Do not use riveted pipe of any description.

Bends. Pipe used for bends to be no lighter than for straight lengths. Bends to be finished accurately to dimensions, so they need not be forced into position unless desirable to provide for expansion. Bends always to be cut off, flanged, and finished after bending. (See specification for steam lines.)

Cast-Iron Pipe. May be used for the exhaust to the condenser, or for other lines if cheaper

than wrought; weight, etc., to conform to the specification for flanged fittings as given below.

Flanges for Pipe and Bends. Sizes 12″ and smaller to be standard weight cast iron, threaded type, screwed on and refaced; for pipe 14″ and larger to be standard weight cast iron, attached by the Fig. 16, p. 491 method. (This style of flange is much superior to the threaded flange, and for large pipe is recommended exclusively.)

Fittings. Sizes 3″ and larger to be cast iron, flanged; 2½″ and smaller, cast iron, threaded. Sizes 14″ and smaller, standard weight; 16″ and larger may be low pressure. Dimensions of flanged fittings to conform to the " American Standard of 1915."

Nozzles. Where outlets on headers are very close, and it is not desirable to use two or more fittings bolting together or a manifold fitting, use nozzles welded into the header pipe. These should be steel throughout, or made of pipe fitted with malleable or steel flanges.

Valves. Sizes 2½″ and larger, except relief, back pressure, and other specialties, to be iron-body, flanged, gate, or angle valves, preferably O. S. & Y. Inside-screw valves with brass stem; O. S. & Y. may have steel stem. Sizes 10″ and smaller standard weight; 12″ and larger may be low pressure, in which case they are to have standard weight flanges.

The seating faces of discs and the seat rings to be renewable brass; bonnet to be arranged for back seating when the valve is open for packing under pressure.

Valves 2″ and smaller to be all brass.

Separators. To be of the welded receiver type; constructed of steel throughout, seamless and without rivets, complete with drain-trap, etc.

Specialties. The market provides many satisfactory specialties, such as exhaust-relief valves, back-pressure valves, expansion joints, etc.

Facing. Flanges, except Fig. 16, p. 491 type, on pipe valves and fittings to be faced straight across, rough finished.

Drilling. Templets to be the " American Standard of 1915."

Bolts. Square head with cold-punched hexagon nut.

Gaskets. " Durabla " or " Rainbow," $^1/_{16}$″ thick, cut in rings to fit inside the bolt holes.

Unions. On small threaded lines use unions wherever necessary to insure quick repairs and at all valve connections.

Supports. Not more than 12-ft. centres, designed to provide for movement in all directions; use substantial anchors where necessary.

Drainage. At necessary points install drip pockets or tap fittings and carry condensation through traps to heater or sewer.

Water Piping. *Pipe and Bends.* For suction or discharge (except cast iron) to be lap-welded wrought steel or iron. Sizes 12″ and smaller, standard weight; 14″ and larger, not less than ¼″ thick. Do not use riveted pipe of any description. Bends to be finished accurately to dimensions, so they need not be forced into position. Bends always to be cut off, flanged, and finished after bending.

Cast-Iron Pipe. Where it is desirable to use cast-iron pipe, the weight, etc., are to conform to the specifications for flanged fittings as given below.

Flanges for Pipe and Bends. Sizes 12″ and smaller to be standard weight cast iron, threaded type, screwed on and refaced; for pipe 14″ and larger, to be standard weight cast iron attached by Fig. 16, p. 491 method.

Fittings. Sizes 3″ and larger to be cast iron, flanged; 2½″ and smaller, cast iron, threaded. Sizes 14″ and smaller, standard weight; 16″ and larger, either standard or low-pressure, as demanded by the service. Elbows, long radius. Dimensions of flanged fittings to conform to standards known as the " American Standard of 1915."

Valves. Stop valves 2½″ and larger to be standard weight, iron-body, brass-mounted flanged, gate, or angle valves. Preferably O. S. & Y., with brass stems. (Low-pressure valves may be used in some lines.)

The seating faces of discs and the seat rings to be renewable brass; bonnet to be arranged for back seating when the valve is open for packing under pressure.

Valves 2″ and smaller to be all brass.

Specialties. The market provides many satisfactory specialties, such as foot valves, relief valves, meters, etc.

Facing. Flanges, except as otherwise specified, on pipe, valves, and fittings, to be faced straight across, rough finished.

Drilling. Templets to be known as the "American Standard of 1915."

Bolts. Square head with cold punched hexagon nut.

Gaskets. "Cloth inserted rubber" or "Rainbow," $^1/_{16}$″ thick, cut in rings to fit inside the bolt holes; for pipe in the ground use heavy canvas, full face, dipped in red lead.

Unions. On small threaded lines use brass ground-joint unions wherever necessary to insure quick repairs and at all valve connections.

Supports. Not more than 12-ft. centers.

Blow-off Lines. *Pipe and Bends.* To be full weight, lap-welded steel. In all particulars same as for steam lines.

Flanges for Pipe and Bends. To be standard weight, cast-iron threaded, screwed on and refaced. (Same as for steam lines.)

Fittings. To be standard weight cast iron, flanged. Elbows, long radius; use extra-heavy malleable screwed ells if within the fire walls. Header fittings to be laterals or single-sweep tees. Dimensions "American Standard of 1915."

Cast-Iron Pipe. May be desirable for a header buried in the ground, then use heavy-weight flanged pipe.

Valves. Blow-off lines from boilers to be double valved; use one heavy asbestos-packed cock and one angle pattern blow-off valve, flanged ends.

Facing. Flanges on pipe, valves, and fittings to be faced straight across, rough finished.

Drilling. Templets to be the "American Standard of 1915."

Bolts. Square head with cold-punched hexagon nut.

Gaskets. "Durabla" or "Lead," $^1/_{16}$″ thick, cut in rings to fit inside the bolt holes.

Specification No. 2—Steam Pressure 250 Pounds—Saturated

This specification covers material recommended for steam plants operating with saturated steam up to 250 pounds per square-inch gage. This specification is similar to No. 1, except for the following changes.

Steam Lines. *Pipe.* High-pressure steam and drip pipe to be wrought steel, lap welded. For pressures up to 200 pounds per square inch, sizes 7″ and smaller to be full card weight; 8″—28½ pounds per foot; 9″—34 pounds per foot; 10″—40½ pounds per foot; 12″—50 pounds per foot. Sizes 14″ and larger, ⅜″ thick or heavier. For pressures 200 pounds per square inch and over, 12″ and smaller to be extra strong; 14″ and larger ½″ thick. Do not use riveted headers.

Flanges for Pipe and Bends. Sizes 2½″ and smaller, to be extra-heavy weight malleable iron or steel, threaded type, screwed on and refaced. For pipe 3″ and larger to be malleable iron or steel (low-hub section) attached by the *Vanstone* method. This type of flange is much superior to the threaded flange, and has our recommendation even as against the welded-on flange.

Valves. Sizes 2″ and larger, except stop and checks and other specialties, to be iron-body, flanged, gate or angle valves, extra-heavy weight, O. S. & Y. (For pressures up to 175 pounds medium-weight valves may be used.) Sizes 8″ and larger to be fitted with one-piece by-pass valve.

The seating faces of discs and the seat rings to be renewable hard bronze; bonnet to be arranged for back seating when the valve is open for packing under pressure.

Facing. Flanges, except Fig. 16, p. 491 type, on pipe, valves and fittings to be faced with $^1/_{16}$" raised projection inside the bolt holes; bearing surface for bolt head and nut to be finished, *i.e.*, spot faced.

Boiler-Feed Lines. *Flanges for Pipe and Bends.* To be extra-heavy weight malleable iron or steel (low-hub section). Sizes 2½" and smaller threaded type, screwed on and refaced. For pipe 3" and larger to be attached by Fig. 16, p. 491 method. (Semi-steel flanges may be used for the small sizes when the pressure does not exceed 150 pounds.)

Fittings. Sizes 2½" and larger to be extra-heavy weight, cast iron or semi-steel, flanged. Sizes 2" and smaller to be extra-heavy, cast or malleable iron, threaded. Elbows, long radius. Dimensions of flanged fittings to conform to standards adopted by *Walworth* and known as the "American Standard of 1915."

Valves. Sizes 2½" and larger, except checks and feed valves (globes), to be iron-body, flanged, gate or angle valves, extra-heavy weight, O. S. & Y., with bronze stem. (For pressures up to 175 pounds medium weight valves may be used.) The seating faces of discs and the seat rings to be renewable bronze; bonnet to be arranged for back seating when the valve is open for packing under pressure.

Valves 2" and smaller to be all bronze.

Facing. Flanges, except Fig. 16, p. 491 type, on pipe, valves, and fittings, to be faced $^1/_{16}$" raised projection inside the bolt holes; bearing surface for bolt head and nut to be finished, *i.e.*, spot faced.

Blow-off Lines. *Pipe and Bends.* To be extra strong lap-welded steel. In all particulars same as for steam lines.

Flanges for Pipe and Bends. To be extra-heavy malleable iron or steel (low-hub section). Sizes 3½" and smaller threaded type, screwed on and refaced. For pipe 4" and larger to be attached by the *Vanstone* method. (Semi-steel flanges may be used when the pressure does not exceed 150 pounds.)

Fittings. To be extra-heavy weight, cast iron, flanged. Elbows, long radius. Header fittings to be laterals or single-sweep tees. Dimensions "American Standard of 1915."

Facing. Flanges, except as otherwise specified on pipe, valves, and fittings, to be faced with $^1/_{16}$" raised projection inside the bolt holes; bearing surface for bolt head and nut to be finished, *i.e.*, spot faced.

Specification No. 3—Steam Pressure 250 Pounds—Superheated

This specification is the same as No. 2, with the following exceptions:

Steam Lines. *Flanges for Pipe and Bends.* When the temperature does not exceed 500° F. malleable iron flanges may be used.

Fittings. Cast-iron or semi-steel fittings for temperatures of 500° F. or over are *not* recommended.

Valves. Sizes 1½" and larger, except stop and checks and other specialties to be extra-heavy weight (250-pound line) flanged gate or angle valves, O. S. & Y.; bonnet packed with "Durabla" gasket. Sizes 7" and larger to be fitted with one-piece by-pass valve—body, bonnet, and discs or wedge to be open-hearth steel castings—yoke may be cast iron. When temperature does not exceed 600°, stem may be cold-rolled steel; for higher temperatures use *Monel* metal stems. Dimensions to be *Walworth*—now generally adopted by the leading manufacturers.

The seating faces of discs and the seat rings to be renewable *Monel* metal, stuffing-box gland steel, bronze lined; bonnet to be arranged for back seating when the valve is open for packing under pressure.

Valves 1¼" and smaller to be all bronze or of suitable composition to withstand high temperatures.

Note. Gray iron valves are not recommended for superheated steam service. For tempera-

tures below 500° it might be possible to use valves cast in gray iron with *Monel* mountings and seats pinned in. The use of steel valves as specified above for *all* superheated steam lines is recommended.

Typical Power-House Piping Specification. The following is an extract from a typical *United States Treasury Department* specification:

This contractor must furnish all labor and material required to install the new and modify the present steam, exhaust, drip, and drain piping as shown on the drawing or required to properly connect the engines to the different systems of piping. All modification in present trenches, covers, etc., and all new trenches, covers, etc., to be done by this contractor.

Covering of all new piping and repairing damaged covering must be done by this contractor.

Pipes. All new piping installed under this contract, except the long sweep bends, to be best quality wrought-iron or soft-steel pipe of the sizes shown or required for type of engine furnished; all piping to be straight, true, and round, of full weight and thickness.

New long sweep pipe bends to be full weight, wrought-iron pipe.

All exposed drain, drip, and indicator connections above floor line in engine room to be brass pipe, iron-pipe size and gage, finished, polished, and nickel-plated.

Fittings. All new fittings, except ground-joint unions and fittings on exhaust and brass pipe, to be manufactured of best quality tough, gray cast iron of uniform thickness, entirely free from sand holes, designed for a working pressure of 250 pounds. Connections to engines to be long sweep bends.

All new fittings on exhaust piping to be same as high-pressure fittings, except designed for 100 pounds pressure.

Fittings on brass pipe to be extra-heavy steam pattern, screw fittings, polished, and nickel-plated.

All elbows on pipe 2½ inches diameter and larger to be of the "medium radius" pattern, except in cases of actual lack of space for their use, when ordinary "short radius" fittings will be permitted.

All pipes 2½ inches diameter and larger to have flange unions and flange connections to valves.

All threads on piping must be full and clean cut. Calking of threads on any piping will not be permitted.

In all cases the pipes must be screwed clear through the flanges and have the flanges faced. Straight pipe to have flanges faced off in a lathe.

The faces of all flanges on fittings, valves, and pipes to have three V-shaped grooves scored on them between the bore and the inner edge of the bolt holes.

All gaskets used to be either *Rainbow* or *Jenkins*, of the thickness to suit various size pipe, cut to extend from the inside of pipe bore to the inner edge of bolt holes in flanges.

Standard wrought-iron couplings will be allowed only on pipes 2 inches diameter and less.

All connections in piping or to appliances 2 inches diameter and smaller to be made with all-brass, ground-joint unions.

Hangers. All piping installed under this contract to be supported every 8 to 10 feet by heavy adjustable hangers, similar to hangers in place.

Pipes in trenches to be supported on expansion rollers and chairs every 8 to 10 feet.

Pipe Sleeves. All pipes passing through walls to be provided with wrought-iron pipe sleeves.

Valves. Valves to be placed on all piping as shown on the plan and where called for in the specification or required to give perfect control of the different systems and their various branches.

Gate valves of first-class and approved manufacture, with double seats, are to be used on all piping under this contract except where otherwise specified. Valves 8 inches diameter and above to be provided with by-passes.

Angle globe valves of first-class and approved manufacture with non-corrosive seats and composition discs are to be used on the branch connections to the engines, stems of which are to set vertical.

Valves 2½ inches and larger to have iron or semi-steel bodies, brass mounted, and flanged; valves 4 inches diameter and larger on high-pressure piping to have outside yokes and rising spindles. Valves 2 inches diameter and smaller to be constructed of best quality brass and those on nickel-plated piping to be finished and nickel-plated. All valves on high-pressure piping to be extra heavy pattern, designed for 250 pounds working pressure, on low-pressure piping designed for 100 pounds working pressure. Valves on low-pressure piping may have non-rising spindles.

The name or trade-mark of the manufacturer must be stamped or marked upon each and every valve installed under this contract.

Pipe Trenches. The pipe trenches required to be provided with walls, borders, and cover plates similar to walls, borders, and cover plates in place.

High-Pressure Steam Piping. The present high-pressure steam piping from boilers must be changed from points shown, providing stop valves on boiler side of separators, branch to each engine, and on line as shown.

Exhaust Piping. The new exhaust pipe must be installed to point shown, providing stop valve on branch from each engine

Drip Piping. The drip connections from the throttle valve on each engine and from the two steam separators are to be connected into one main drip line and be connected to the high-pressure drip system as noted. The branch from each engine and each separator to be provided with check and globe valve.

The drip from the valve-stem bonnets and crank case on each engine are to be connected together and extended to the top of a brass funnel located above the floor line. The funnel must be connected to the branch drip from the cylinder and steam chest of each engine. Connections between funnels and main branch to be provided with check valve; main branch from each engine near main drip line to be provided with check and globe valve. The main drip to extend in trench and be connected to the main drip from the exhaust pipe and oil separator beyond the seal.

The drip from bottom of exhaust pipe where same rises and from the oil separator are to be connected together and extended in trench to inside of boiler-room wall, at which point a seal, as deep as possible, is to be formed with drain valve at bottom.

The main low-pressure drip line from engines and from the exhaust are to be connected together and run along boiler-room wall and be connected to the present oily drip system near the blow-off tank, providing same with check valve.

Steam Receiver Separators. Two 8-inch approved steam receiver separators, constructed of heavy sheet steel plates, designed for 250 pounds pressure, are to be furnished and installed in the high-pressure steam main where indicated. Each separator must have a capacity of not less than 12 cubic feet and be provided with glass water gage and drain connection to steam traps.

Oil Separator. One 12-inch approved oil separator with removable baffle plates or suitable means for cleaning to be furnished and installed in the exhaust line at point indicated.

Steam Meter. One recording steam-flow meter of the same make and type as steam meters in present pump room must be furnished and installed on bracket in the new engine room where indicated and be so connected that the steam flowing through the 5-inch or the 2½-inch pipe will be measured.

All necessary nozzle plugs, receivers, piping valves, steam gage, etc., required to operate the meter properly to be furnished and installed.

Meter to be provided with dust-proof case; charts, 16,000 pounds flow, not less than 60 feet long; clock to drive chart at the rate of 3 inches per hour, and one year's supply of charts and ink.

Testing. The entire system of piping under this contract, after completion, but before coverings are applied, must be proved absolutely tight under actual working conditions, to the satisfaction of the custodian.

Covering. After the new steam-piping work has been tested and approved this contractor is required to cover all pipe, separators, fittings, valves, including exhaust pipes in trenches,

with non-conducting fireproof covering of a quality hereinafter described, put on in a first-class and approved manner. Scrap pieces must not be used where a full-length section would fit.

The covering for piping to be sectional removable covering not less than ⅞ inch thick, except for high-pressure steam pipe in engine room, which must be double thick, with 8-ounce canvas jacket, all put on with brass-lacquered bands, No. 30 *Brown & Sharpe* gage in thickness and not less than ¾ inch wide. Bands to be spaced not over 18 inches apart on piping, and at each tee three bands are to be used, and at each ell two bands are to be used.

Valves and fittings to be covered with plastic material of grade hereinafter specified, and have canvas jacket and brass bands similar to pipe covering; or, if desired, sectional removable coverings of same grade as pipe covering may be used.

Plastic covering for valves and fittings to be same finished thickness as pipe covering.

To be acceptable under this contract, coverings must have as a basis either carbonate of magnesia ($MgCO_3$) or long-fibered asbestos, or a combination of the two materials. For the piping and all valves and fittings, the covering must contain not less than 80 per cent of the basis; the remainder to be made up of pure commercial carbonate or sulphate of lime. Any other ingredients present in the compound must not aggregate more than 10 per cent of the total compound.

Every section and bag of covering delivered at the building for use, and also all samples forwarded to the Supervising Architect, must have the manufacturer's stamp or label attached, giving name of manufacturer and brand and quality of material.

The successful bidder will be required to submit samples, if desired, of the proposed pipe covering (with brass-lacquered band) and of plastic material. No covering will be allowed to be placed until after apparatus has been tested and proved satisfactory and free from leaks.

Painting. All ironwork in engine room and new ironwork outside of engine room to be painted all over two coats best quality metallic paint, suitable for steam-heated surfaces, of color selected by custodian.

All exposed pipe covering in engine room to be painted three coats lead and oil paint, finishing tint to be same as walls and have enamel finish. All new covering or disturbed covering outside of engine room to be given two coats asbestos paint, same color as paint on present covering.

CHAPTER XVII

ARRANGEMENT OF STEAM POWER PLANTS

General Considerations. It is universal power plant practice to separate the boiler and engine rooms for the obvious reason of keeping the prime movers and generators in a room which will not be affected by the coal and ash dust, and escaping steam from breaking gage glasses, leaky joints, etc. The greater share of the high-pressure steam piping is usually located in the boiler room.

The location of the prime movers and boilers in reference to one another, in the small and medium-size plant, when the plant location is such as to permit it, is usually designed on the general scheme as shown by Fig. 4, and is known as the "back to back" arrangement, the boiler and engine center lines being parallel with one another. The boilers and prime movers are located on opposite sides of a partition wall. This arrangement gives the shortest pipe connections and provides a neat, compact, and economical layout.

Boiler-Room Arrangement. It is obviously good practice in the design of industrial power plants to provide in the original plan for future extension of the plant. This is readily provided

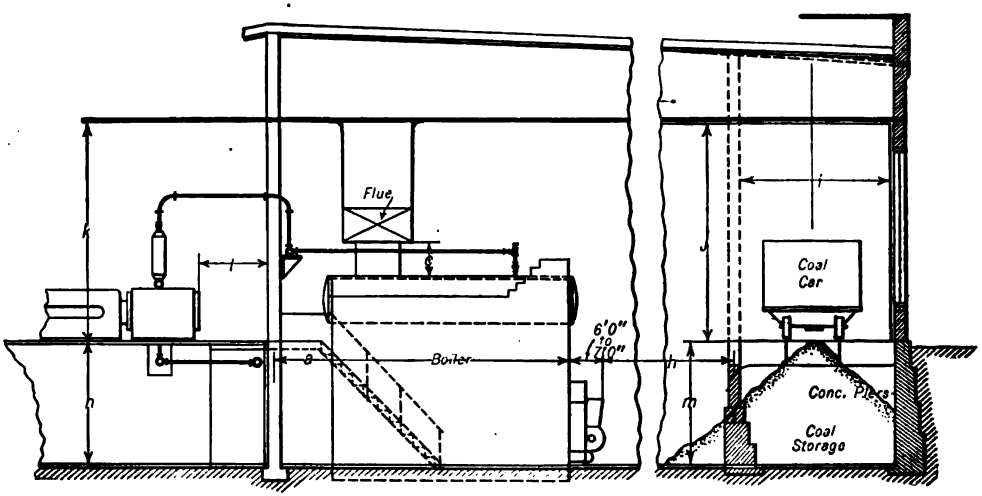

FIG. 1.

for in the "back to back" arrangement by locating the auxiliaries (feed-water heater, pumps, etc.) and chimney at the same end of the boiler room. The auxiliaries, breeching, and chimney being installed of sufficient size to provide for a reasonable increase in capacity.

The width of the boiler room depends largely upon the method to be employed for handling the coal and ashes.

In planning the boiler room provision must be made for the withdrawal of old and the insertion of new boiler tubes for the horizontal type of boilers, which is the type more often installed. The minimum distance *d* (Fig. 2) from the front of the boiler setting

to the wall is approximately 17′ 0″, unless windows are provided in the wall which may be utilized for this purpose. The distance must be increased to approximately 19′ 6″ when chain-grate stokers are employed, in order to withdraw the stoker. For hand-fired boilers a clear space *f* (Fig. 2) of about 8′ 0″ should be allowed between the front wall of the setting

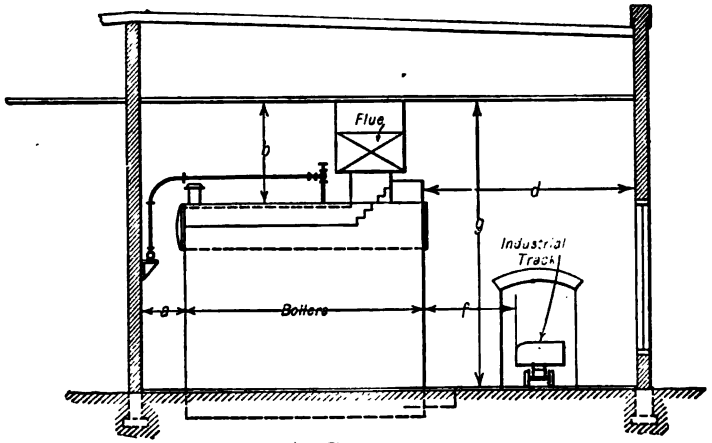

FIG. 2.

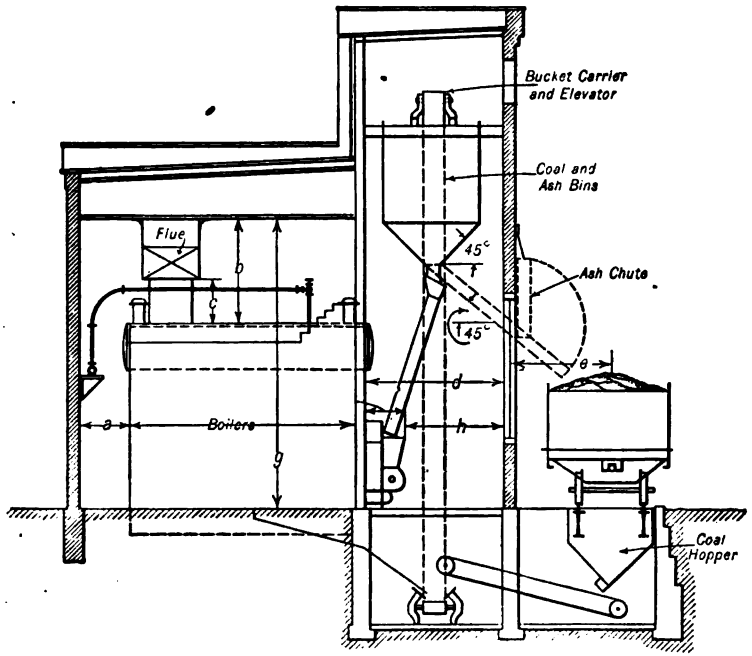

FIG. 3.

and the coal dumped in front of the boilers or the industrial coal truck, from which the coal may be directly shoveled. A common arrangement (Fig. 1) in small plants is to depress the boiler-room floor approximately 10 feet below the grade line and run the railroad siding on a

trestle either through the boiler room or on the other side of the outside wall, the coal being dumped directly on the boiler-room floor. When the boiler-room floor is not depressed the railroad siding may be run through on a trestle, the approach to same being made on a 5 per

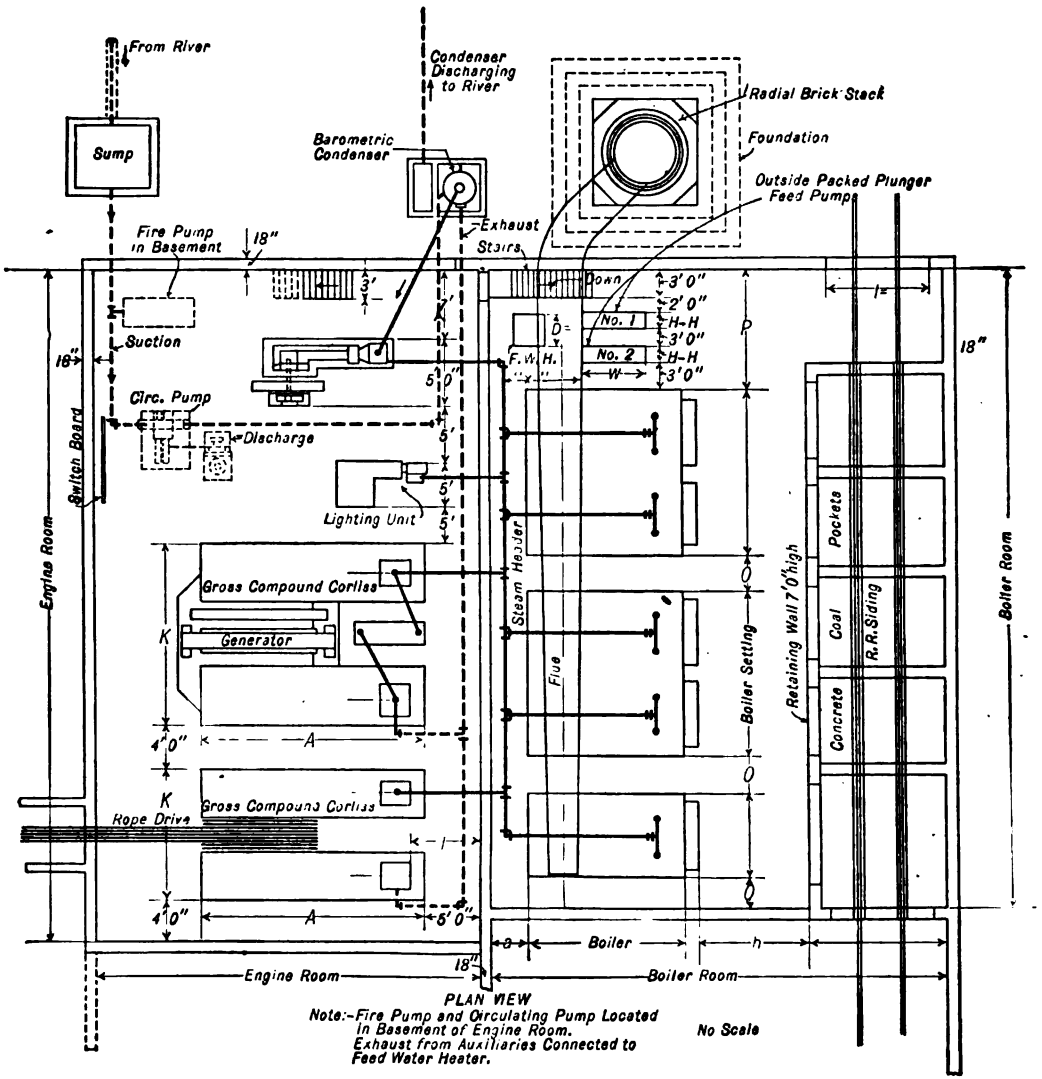

FIG. 4—PRELIMINARY SKETCH, SHOWING ARRANGEMENT OF BOILER- AND ENGINE-ROOM.

cent grade. In this case the height of the trestle is sometimes made 15 to 18 ft. above the boiler-room floor, and trestle bents spaced on approximately 12′ 0″ centers. Trestle may be wholly constructed of wood or 24″ I-beam stringers with concrete piers or structural steel bents. A concrete retaining wall about 7′ 0″ high is best material for the coal-bin construction between trestle and front of boilers (Fig. 4). Two sliding doors placed in each bent of wall about 3′ 6″

wide each with guide channels cast vertically in the face of the wall, may be used for the sliding doors. The pressure of coal is very considerable and becomes a live load when the coal is dumped. It is capable of bulging out an 8″ brick wall or bending 4″ x 12″ *Y.P.* plank binboards if the span is over 10′ 0″.

The ashes are generally removed from the ash pits by hand in small plants by shoveling into barrows and dumping into a small skip hoist or bucket elevator located at the end of the boiler room, the ashes being delivered into a bin or bunker located outside the wall.

A small drag-chain conveyor run in a covered trench in front of the ash pits may be advantageously employed for ash removal to a skip hoist or bucket elevator.

When the boilers are set in a double row using a common firing aisle, the minimum distance between the face of the settings should be approximately 17′ 0″ to allow for tube renewals for horizontal boilers. Boilers are usually set in batteries of two boilers to the battery, the clear space allowance *O* (Fig. 4.) between the battery setting being made 5′ 0″ to 6′ 0″, which provides ample space for tube cleaning.

The distance *a* (Fig. 3) from the back of the setting to the wall may be made 4′ 0″ to 5′ 0″ when economizers are not employed and the breeching is run over the top of the boilers. This provides ample space for the blow-off piping steam header, for operating the valves on same and the opening of the doors at the back of horizontal water-tube boilers.

If the flue or breeching is to be located between the boiler and wall then the space allowance will be determined by the outside width of the flue employed plus sufficient distance, say 2 ft., to allow for getting into the rear manhole in the boiler drum or drums of water-tube type boilers. The distance between the setting and wall need not in this case ordinarily exceed 6 to 8 ft.

The feed-water heater and boiler-feed pumps in the small and medium-size plants are usually

FIG. 4-a. TYPICAL SECTION OF BOILER ROOM FOR SMALL MANUFACTURING PLANT.

located at one end of the boiler room in line with the boilers. The space required between the setting and the wall need not ordinarily exceed 12 to 18 ft. Approximately 3 ft. in the clear should be allowed around each pump and the heater for the piping. The suction lines to the pumps and the blow-off piping are frequently run in concrete trenches, having removable checkered steel cover-plates. The clear height *g* from the boiler-room floor to the lower chord

of the roof truss is ordinarily 25 to 28 ft. when overhead coal bunkers are not used. If overhead coal bunkers are employed an additional 10 to 15 ft. is necessary.

The clear height b from the top of boiler setting to the underside of the lower chord of roof truss frequently depends upon the maximum height of the breeching.

The location of the chimney or stack center line beyond the boiler-room wall depends upon the size of stack foundation which should ordinarily come wholly outside of the wall foundation. Dimensions i and j (Fig. 1) for opening to be 12′ x 18′ for locomotive clearance.

When the smoke connections are taken from the rear of the boiler and an overhead breeching is employed, the bottom of the breeching must clear the top of the boiler by a sufficient amount to allow the boiler leads to the header to pass under. The baffling of the horizontal water-tube boiler, however, may be arranged horizontally, so that the smoke connections are taken off from the top of the boiler toward the front end so that in this case there is no interference. The minimum clear height from the boiler-room floor to the under side of ceiling beams for plants located in Federal buildings as specified by the Treasury Department for water-tube boiler installations is as follows:

For boilers of 100 to 150 hp	14′ 6″
For boilers of 150 to 175 hp	15′ 0″
For boilers of 175 to 200 hp	15′ 6″

Engine-Room Arrangement. The clearance around the machines in the engine room should be ample and ordinarily not less than 5 ft. The distance from the back cylinder head to the wall should be sufficient to allow the withdrawal of the piston and its attached rod with an additional allowance of approximately 2 ft.

A basement under the engine room is a necessity when surface or jet-condenser apparatus is to be installed. The difference in elevation h (Fig. 1) of the basement floor and engine-room floor is frequently made about 10 ft., but must be sufficient for the type of condensing apparatus used in any event.

In a non-condensing plant the exhaust piping may be run in covered trenches connecting with an exhaust main located in the boiler room back of the boilers. The clear height from the engine-room floor to the lower chord of the roof truss, if a travelling crane is to be installed, depends upon lift and size of crane required to handle the heaviest single piece of apparatus installed. This height does not usually exceed 30 ft. in medium-size plants.

The switchboard may be located next to outside wall back of units about 5′ 0″ from face of wall for direct current and 12′ to 14′ for alternating current machines. A space of 10 ft. between outside of generator or flywheel and wall is ordinarily sufficient, unless transformers, oil switches, rotary converters, or other apparatus are to be located between the main units and the wall, in which event the space requirements may be determined by this apparatus.

Dimensions for various power plant apparatus will be found under the several headings in the text.

Examples in Power Plant Design and Arrangement. Fig. 5 shows plan and section of the power plant of the McCormick Building, Chicago, Ill., taken from "Power."

Fig. 6 shows the plan of the La Salle Hotel power plant, taken from "Power."

Figs. 7 and 8 are plans, sections, and method of constructing trenches for the Lumber Exchange Building power plant, from the "Practical Engineer."

Figs. 9 to 14 show plans and sections of the Williamsburg, Penna., plant of the Penn Central Power and Transmission Co., taken from "Power."

This plant is equipped with the most modern machinery and indicating and recording instruments. It has three 800-hp. water-tube boilers with space for a fourth. There is one 5000 kv.a. turbine with provision for a second. The plant is designed for 20,000 kv.a., the piping, etc., being laid out with the view of future extension. All condensing apparatus and most of the piping are in the basement. The piping layout is as simple as is consistent with good engineering, and the plant is up-to-date in every respect. Air for cooling the turbo-generator is cooled and

FIG. 5. PLAN AND SECTION OF POWER H

PLAN

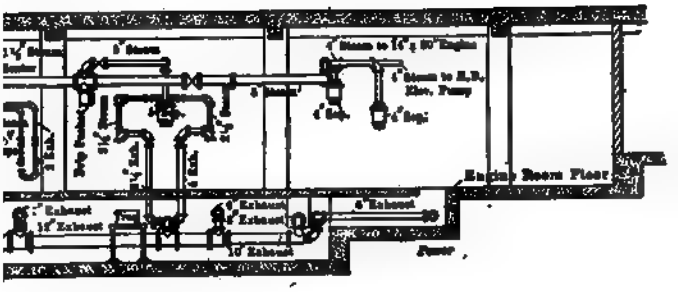

ECTION

NT IN McCORMICK BUILDING, CHICAGO, ILL.

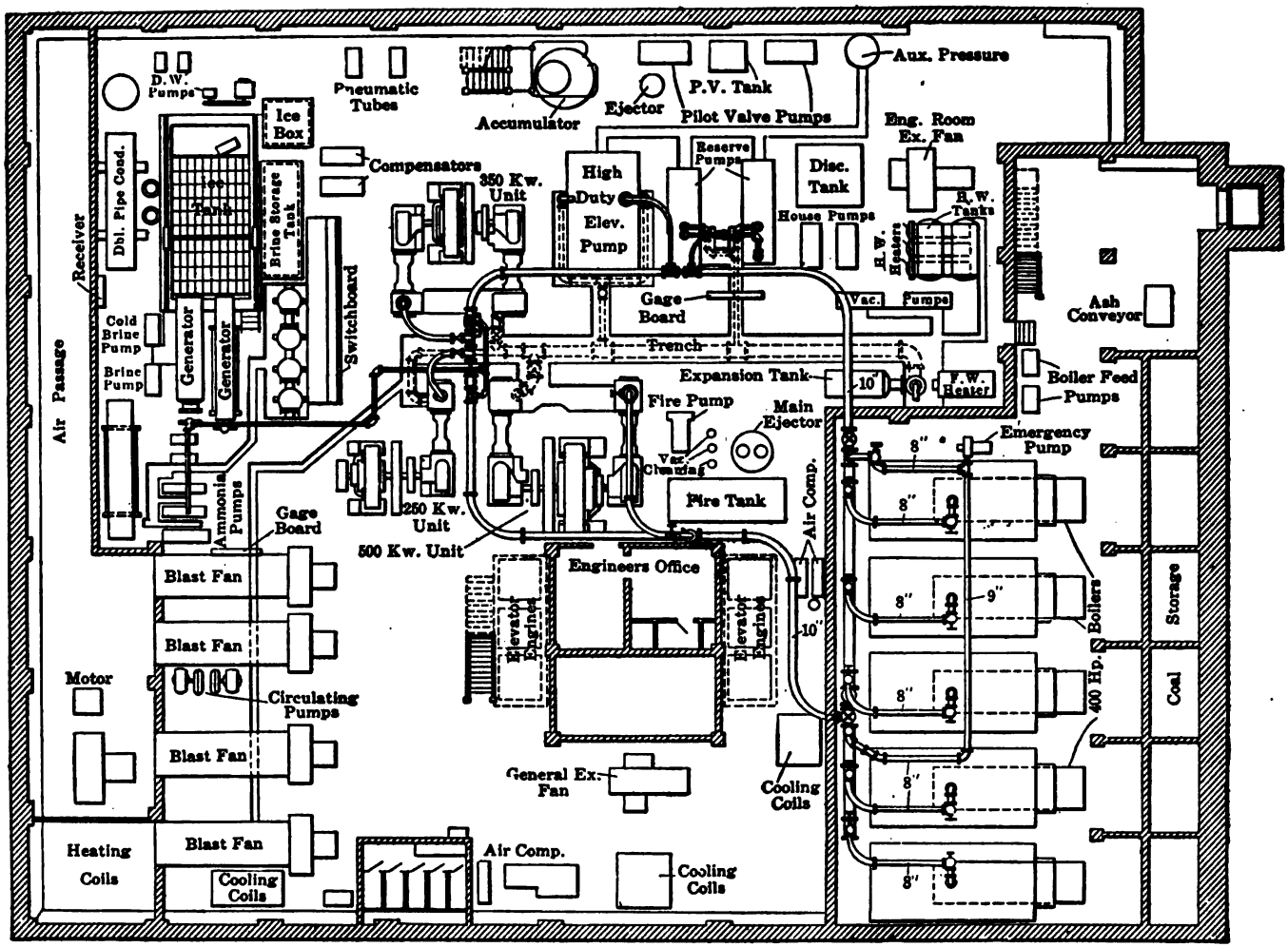

FIG. 6. LA SALLE HOTEL PLANT, CHICAGO, ILL.

FIG. 7. PLAN AND ELEVATION OF ENGINE-ROOM EQUIPMENT AND PRINCIPAL PIPING—LUMBER EXCHANGE BUILDING.
("Practical Engineer.")

washed. A small turbine-driven 125-volt emergency lighting unit is installed on the switchboard gallery.

Figs. 15 and 16 show the plan and a section through the power plant of the Webster Building, Chicago, taken from the " Practical Engineer."

Figs. 17 and 18 are plans of small power plants for manufacturing purposes.

FIG. 8. PLAN AND SECTIONS OF THE BOILER-ROOM—LUMBER EXCHANGE BUILDING. (" Practical Engineer ")

Fig. 19 plan of Conway Building power plant, Chicago, Ill., described in "Power."

Fig. 20 plan of power plant for U. S. Military Academy.

Figs. 21 and 22 show the plan and section of the Regina, Canada, municipal power plant taken from " Power."

This plant represents a capital expenditure of $700,000 and has an ultimate capacity of 20,000 kw. The plant records show for two months' operation, with the new large turbine and electrical auxiliaries, a total coal consumption of 2 58 lb. of coal per kw.-hr. produced by the generator.

This is equivalent to a coal cost of about 0.7c. per kw.-hr. generated.

Figs. 23 and 24 show a section of the power plant and the plan of the steam and exhaust lines of the Jacksonville, Fla., municipal electric light plant.

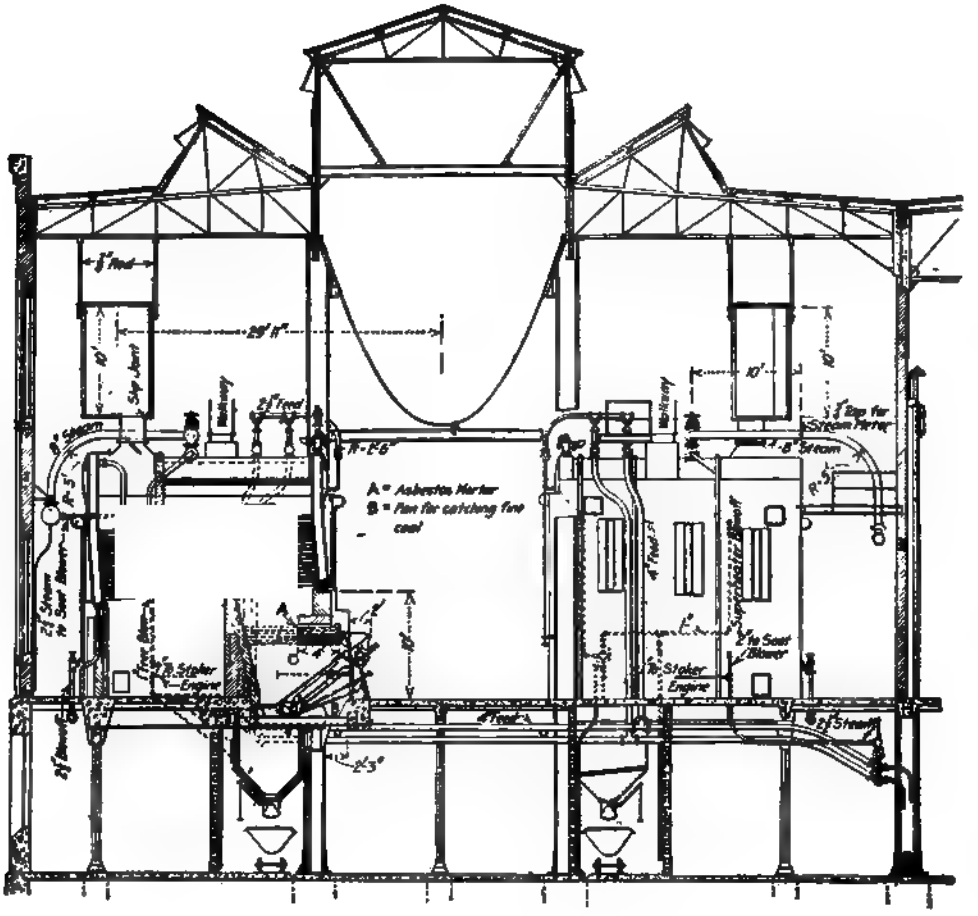

FIG. 9. SIDE ELEVATION OF THE BOILER-ROOM AND BASEMENT.

FIG. 10. REAR ELEVATION OF BOILER SETTING AND PIPING.

FIG. 11. PLAN OF BASEMENT, SHOWING LIVE STEAM, EXHAUST AND WATER PIPING.

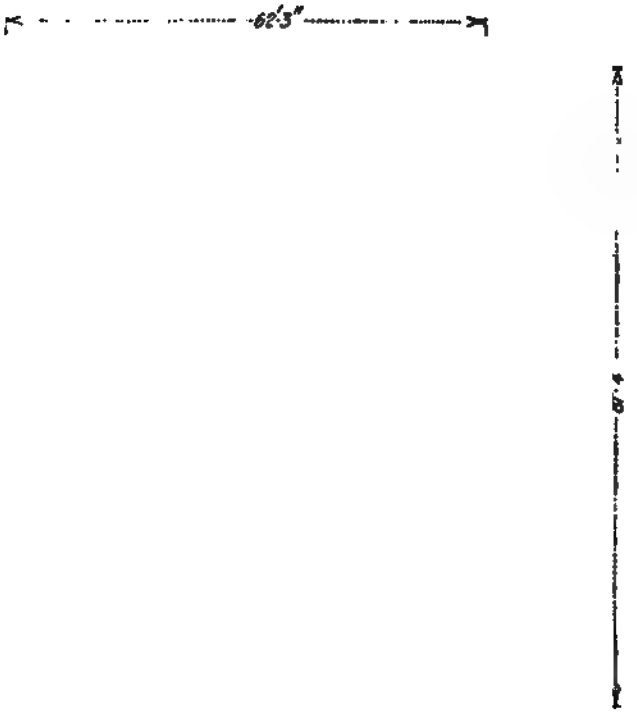

FIG. 12. PLAN OF THE BOILER-ROOM.

FIG. 13. PIPING OF BOILER-FEED PUMPS, FEED-WATER HEATER AND TURBINE-DRIVEN EXCITER.

PRINCIPAL EQUIPMENT OF THE WILLIAMSBURG STEAM-TURBINE POWER PLANT

No.	Equipment	Kind	Size	Use	Operating Conditions	Maker
3	Boilers	Water-tube	8,165 sq. ft. heating surface	Steam generators	175 lb. pressure, stoker-fired, natural draft	Edge Moor Iron Works
3	Superheaters	Foster	Cap. 24,500 lb. steam per hr., 140 deg. rise	Superheating boiler steam	Temperature rise 140 deg. F	Power Specialty Co.
6	Stokers	Wetzel	62 sq. ft. heating surface	Boiler furnaces	Two to each boiler, engine-driven	Wetzel Mechanical Stoker Co.
1	Scale	Traveling-hopper	2-ton	stokers	Electric drive	R. H. Beaumont Co.
1	Bunker	Overhead, steel	312 tons, capacity			R. H. Beaumont Co.
3	Blowers	Vulcan soot		s	Steam, intermittent	Vulcan Soot Cleaner Co.
1	Pyrometer	Electric		For furnace and flue temp	Recording	Thwing Instrument Co.
1	Regulator	Mason		Draft control	Automatic	Mason Regulator Co.
1	Chimney	Steel, brick lined	12 ft. diam., 225 ft. high	Furnace gas	Self-contained, natural draft	
1	Conveying system	Belt, bucket and scraper	40 tons per hr	Handling coal	Electrically driven, intermittent	R. H. Beaumont Co.
1	Turbo-generator	Horizontal	5,000-kv.a., 4,300-kw	Main unit	175 lb. steam, 3-phase, 60-cycle, 6,600 volts, 3,600 r.p.m	Westinghouse Cos.
3	Meters	Bloneck, efficiency				W. A. Bloneck
1	Air washer		26,000 cu. ft. air per min	Air for generator	) r.p.m.	Carrier Air Conditioning Co.
1	Pump	Centrifugal, single-stage	2½-in.	Water for air washer		Buffalo Forge Co.
1	Motor	Induction	7-hp.	Driving 2½-in. pump	, 60-cycle, 3600 r.p.m.	General Electric Co.
1	Heater	Metering, Cochrane	200,000 lb. water per hr	Boiler-feed water	Uses auxiliary exhaust steam	Harrison Safety Boiler Works
1	Generator	Direct-current	50-kw.	Exciter	125 volts, 1,200 r.p.m.	Crocker-Wheeler Co.
1	Motor	Induction	75-hp.	Driving d.c. generator	440 volts, 3-phase, 60-cycle, 1,200 r.p.m.	Crocker-Wheeler Co.
1	Generator	Direct-current	50-kw.	Exciter	125 volts, 3,000 r.p.m.	Westinghouse Elec. & Mfg. Co.
1	Turbine	Two-stage	50-kw.	Driving d.c. generator	175 lb. steam, 3,000 r.p.m.	Westinghouse Machine Co.
2	Pumps	Three-stage centrifugal	3-in., 250 gal. per min	Boiler feed	Turbine-driven, 2,900 r.p.m.	DeLaval Steam Turbine Co.
2	Turbines	Single-stage		Driving boiler-feed pumps	175 lb. steam, 2,900 r.p.m.	DeLaval Steam Turbine Co.
1	Condenser	Surface	10,000 sq. ft. cooling surface	With main turbine	28-in vacuum	C. H. Wheeler Mfg. Co.
2	Pumps	Air, rotrex	18 x 36-in	With condenser	Engine-driven, 225 r.p.m.	C. H. Wheeler Mfg. Co.
1	Engine	Vertical	8 x 7-in.	Driving air pumps	225 r.p.m.	C. H. Wheeler Mfg. Co.
2	Pumps	Centrifugal	18-in., 7,000 gal. per min	Circulating water	Turbine-driven, 1,650 r.p.m.	C. H. Wheeler Mfg. Co.
2	Turbines	Terry	90-hp.	Driving circulating pump	1,650 r.p.m. 175 lb. steam	Terry Steam Turbine Co.
2	Pumps	Single-stage, centrifugal	3-in.	Hotwell, 250 gal. cap. per min.	Motor-driven, 1,800 r.p.m.	Buffalo Steam Pump Co.
2	Motors	Induction	5-hp.	Driving hotwell pump	440-volt, 3-phase, 60-cycle, 1,800 r.p.m.	Western Electric Co.
2	Pumps	Single-stage	4-in.	House-service	As required, 1,800 and 2,000 r.p.m.	Buffalo Forge Co.
1	Turbine	Spiro	20-hp.	Driving 4-in. pump	175 lb. steam, 2,000 r.p.m.	Buffalo Forge Co.
1	Motor	Induction	20-hp.	erator	440-volt, 3-phase, 60-cycle, 1,800 r.p.m.	Western Electric Co.
1	Turbine	Spiro	3-hp.		175 lb steam, 3,600 r.p.m.	
1	Generator	Direct-current	5-kw.		125 volts, 3,600 r.p.m	
2	Transformers	Oil-cooled	5,000-kv.a.	d energy	6,600-45,000 volts, 3-phase, 60 cycles	
3	Transformers		75-kw		6,600-440 volts	
1	Filter	Oil				
1	Pump	Duplex	8 x 2 x 8-in	Oiling system	Steam-driven	Co.
	Switchboard and miscellaneous electrical apparatus					Mfg. Co.

FIG. 14 ELEVATION OF PIPING IN TURBINE-ROOM BASEMENT.

FIG. 16. TRANSVERSE SECTION OF POWER PLANT.

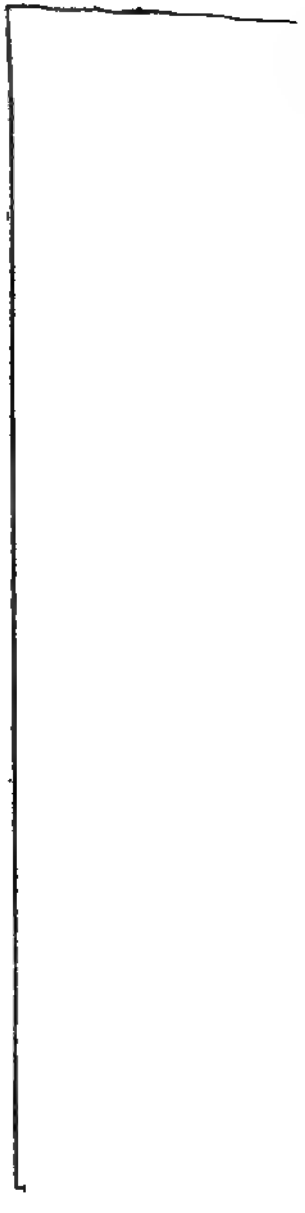

FIG. 15. GENERAL LAYOUT OF ENGINE-, BOILER- AND PUMP-ROOMS.

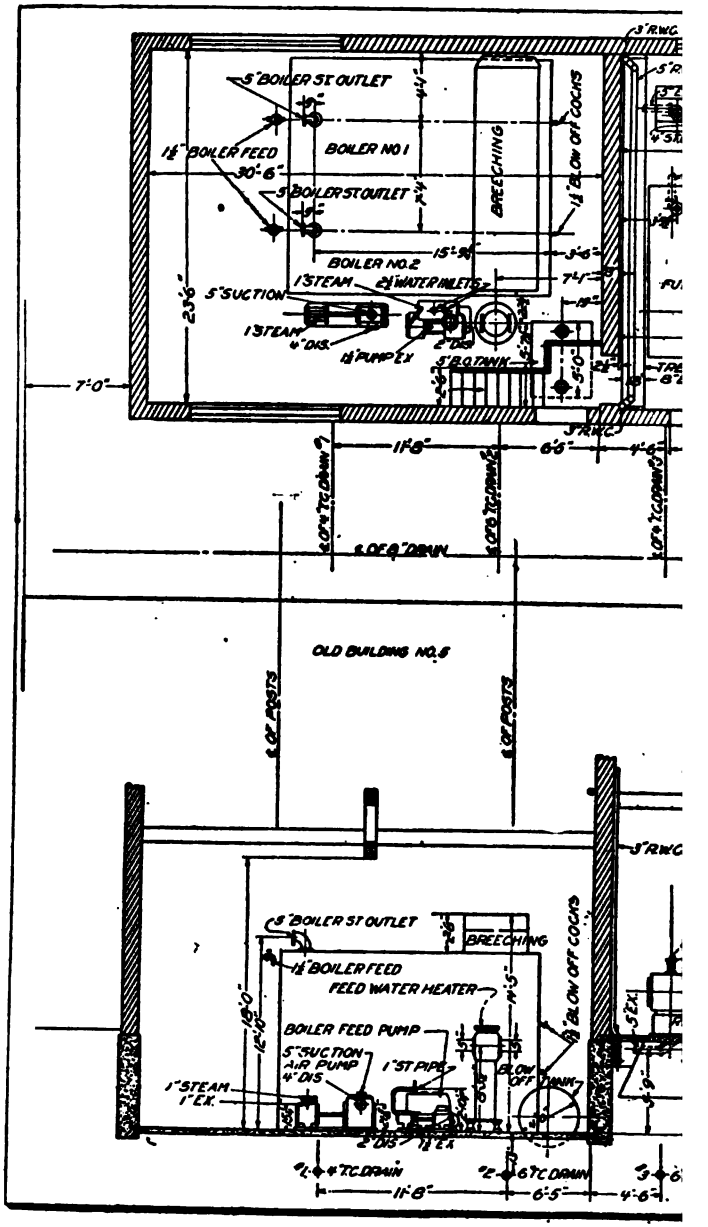

FIG. 17. PLAN AND ELEVAT

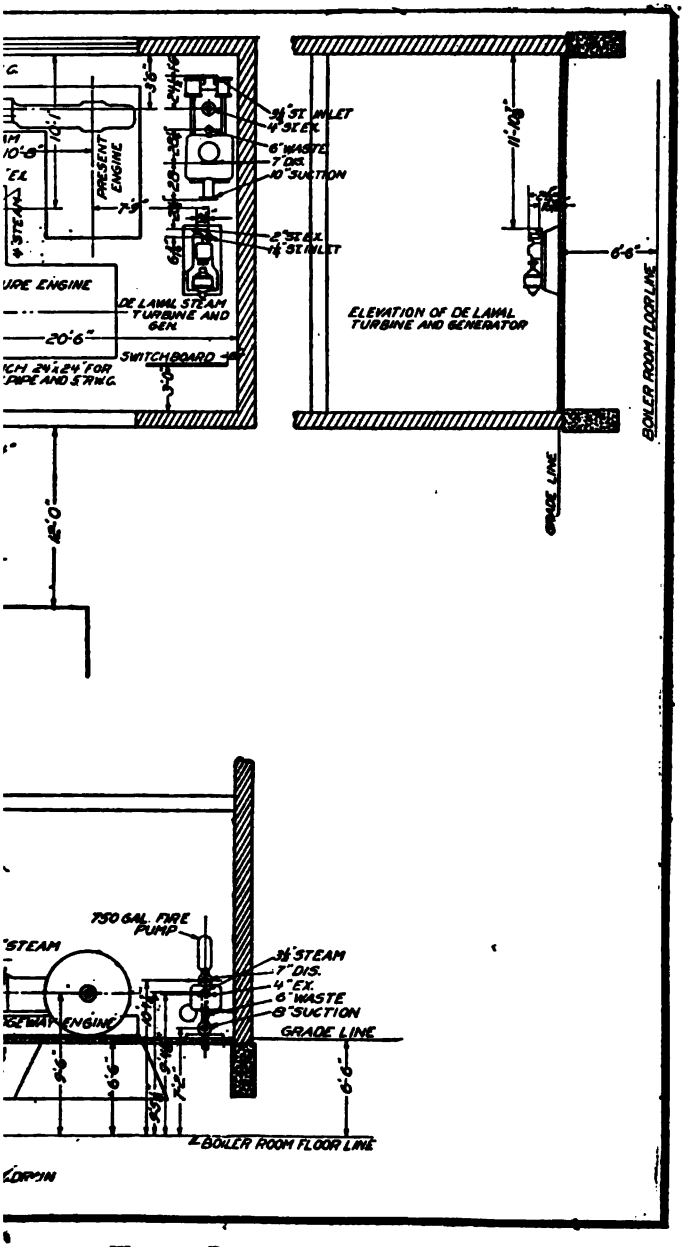

ON OF THE WHEELER PLANT.

FIG. 19. PLAN OF THE POWER PLANT, SHOWING THE ARRANGEMENT OF THE UNITS AND MAIN PIPING.

Exhaust Steam Heating
Vacuum System

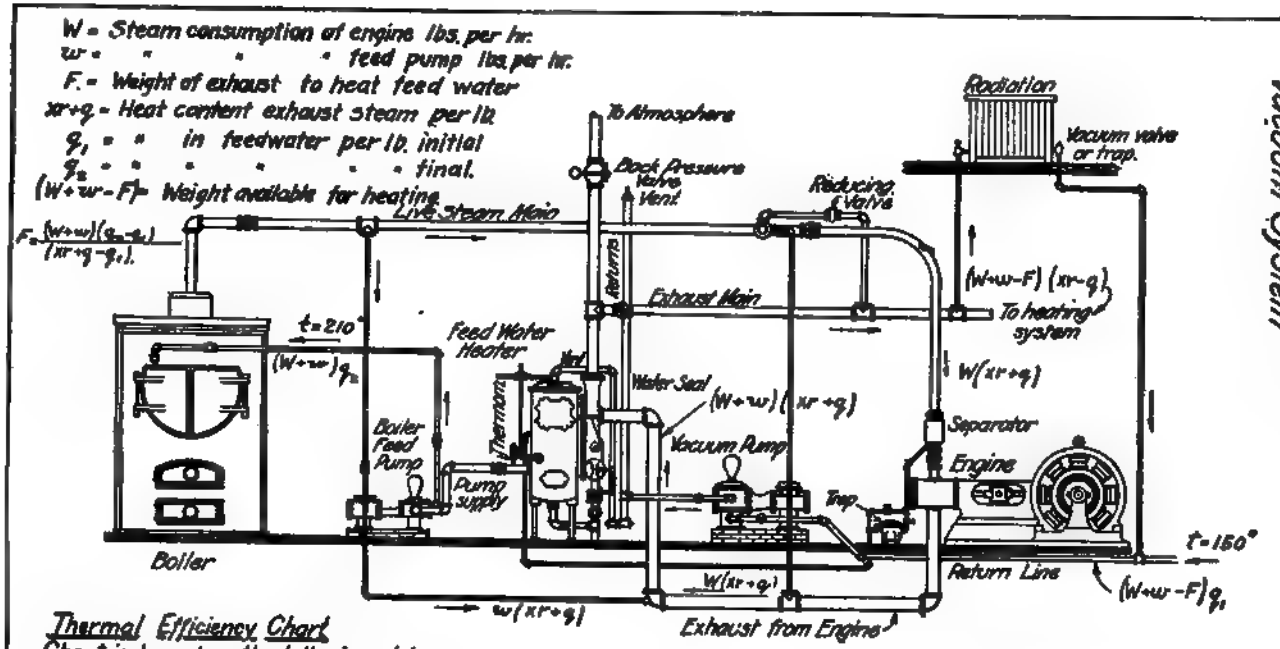

Fig. 66.

Thermal Efficiency Chart

Chart is based on the following data

Boiler and Grate efficiency 60%. Feed pump uses 4% of total steam generated - .60 x .04 or 2.4% heat in coal. Heat delivered to engine 60. - 2.4 or

Thermal efficiency of engine - 7% Heat in coal used engine . 576 x .07 or 4%. Engine rejects 57.6 - 4. 53.6% to which is added 2.4% rejected by feed pump making a total of 56.%

Assuming an initial temp of feedwater = 150° and a temp - 210°, approximately 6% of the total exhaust be used in feedwater heater, leaving .91 (100-06) or 85

AND LIGHTING PLANT OF THE UNITED STATES MILITARY ACADEMY.

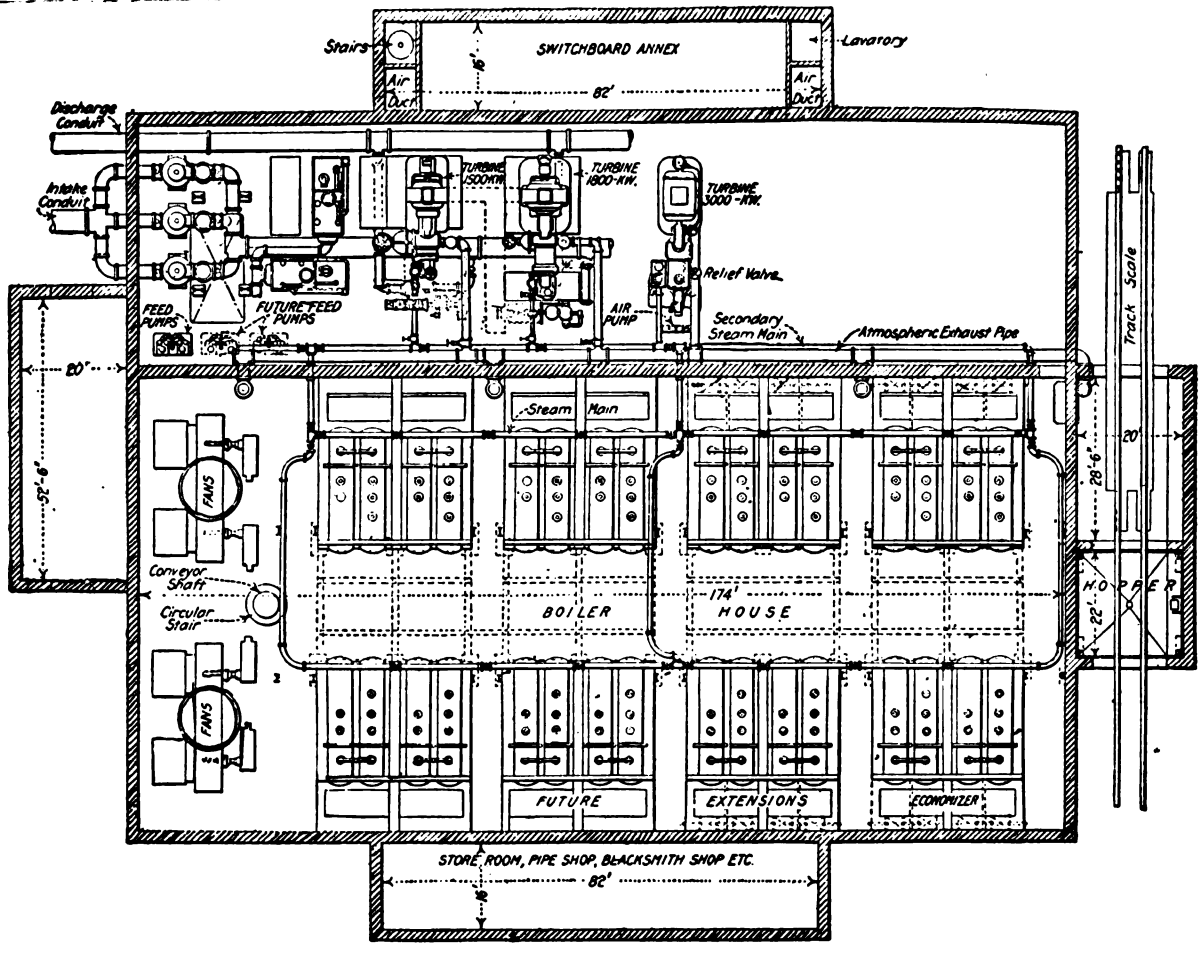

FIG. 21. PLAN VIEW OF THE REGINA MUNICIPAL POWER PLANT.

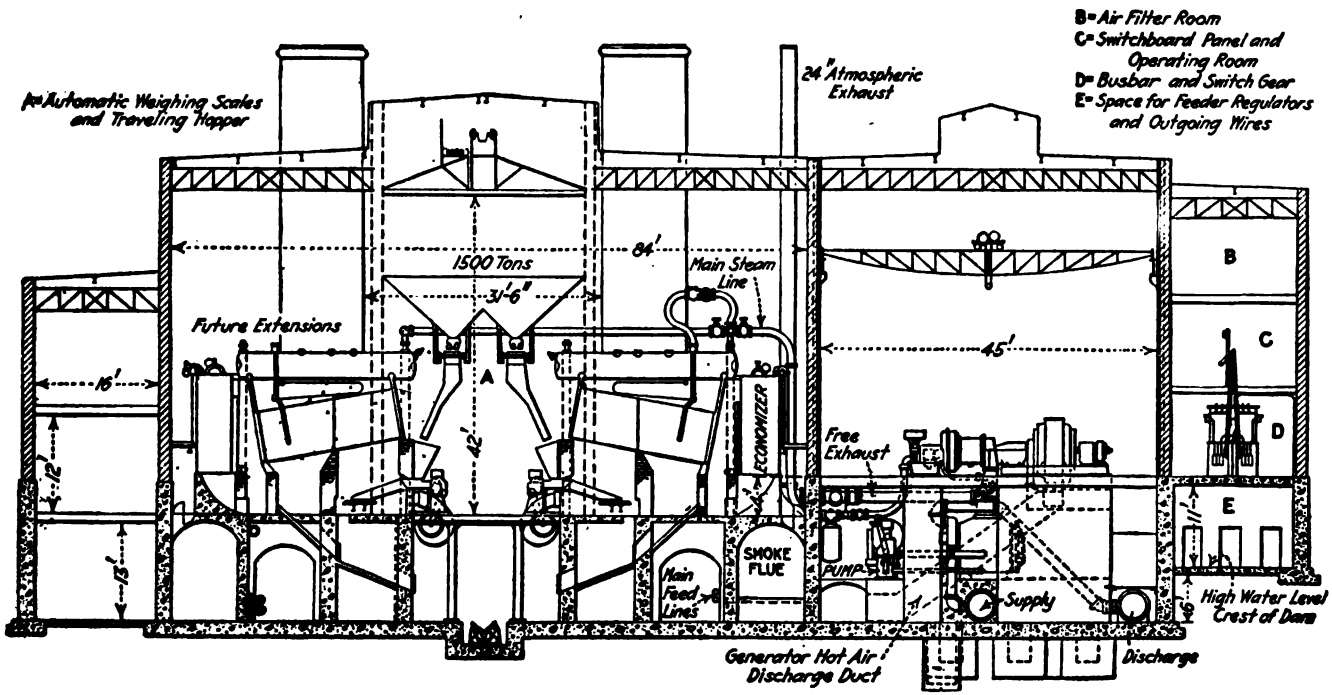

FIG. 22. END SECTIONAL ELEVATION OF THE REGINA POWER PLANT.

PRINCIPAL EQUIPMENT OF REGINA MUNICIPAL POWER PLANT, REGINA, SASK., CAN.

No.	Equipment	Kind	Size	Use	Operating Conditions	Maker
8	Boilers	Horizontal water-tube	500-hp	Steam generators	200 lb. pressure, induced draft, stoker fired	Babcock & Wilcox Co.
8	Stokers	Underfeed	6-retort	Boiler furnaces	Forced draft from No. 7 Sturtevant fan	Sanford Riley Co.
1	Stack	Steel vitrobestos lined	64 ft. above floor, 11 ft. diam	Discharges gases	Two induced-draft fans, 2-in. draft	B. F. Sturtevant Co.
1	Conveyor	Buckets overlapping		Handle coal and ash	Motor-operated	Eastern Steel Co.
1	Crusher	Robbins		Coal crusher	30-hp	Eastern Steel Co.
8	Bunkers	Suspended steel bin	1,600-ton	Holds coal	Filled by conveyor	Eastern Steel Co.
1	Bunker	Suspended steel bin	3,200-cu. ft.	Stores ashes	Filled by conveyor	Eastern Steel Co.
2	Weighers	Automatic dump	500-lb	Weighs coal	Dumps weighed coal into movable hopper	Avery Scale Co.
1	Heater	Cochrane, open	200,000-lb. per hr.	Heats boiler-feed water	Utilizes all exhaust steam	Harrison Safety Boiler Works
2	Feed pumps	Vertical	9 x 12 x 24-in.	Boiler feed	200 lb. steam pressure	G. & J. Weir
8	Economizers	Steel tube	2,320-sq. ft.	Heats boiler-feed water	Water enters at about 100 deg. F.	B. F. Sturtevant Co.
1	Turbine	Disk and drum	1,500-kw	Main unit	180 lb. steam, 100 deg. superheat, 28-in. vacuum, 1,800 r.p.m.	Willans & Robinson
1	Turbine	Drum impulse and reaction	1,500-kw	Main unit	180 lb. steam, 100 deg. superheat, 28-in. vacuum, 3,600 r.p.m.	Willans & Robinson
1	Turbine	Drum impulse and reaction	3,000-kw	Main unit	180 lb. steam, 100 deg. superheat, 28-in.	Willans & Robinson
3	Turbo-generators	Three-phase, a.c.	Same as turbines	Generates current	Same s[illegible] respectively.	Siemens Bros. Dynamo Works
1	Condenser	Surface with augmenter	3,300-sq. ft.	Condenses steam from 1,500-	28-in. vacuum with 3-throw vacuum pump	Willans & Robinson
1	Condenser	Surface with augmenter	6,650-sq. ft.	from 3,000-	28-in. vacuum with 3-throw vacuum pump	Willans & Robinson
1	Condenser	Surface	4,400-sq. ft.	from 1,500-	28-in. vacuum with 2-throw vacuum pump	Mirrlees, Watson & Co.
1	Exciter	Motor-driven	25-kw	000-kw. tur-	125 volts, 1,800 r.p.m	Bruce Peebles Co.
1	Exciter	Turbine-driven	125-kw	Excitation for main units	Turbine driven with gear reduction, 125 volts, 900 r.p.m.	Terry Steam Turbine Co.
1	Pump	Wet-vacuum		Maintains vacuum in condenser	Two-throw, vertical, motor-driven	Mirrlees, Watson & Co.
1	Pump	Dry-vacuum		Maintains vacuum in condenser	Three-throw, vertical, motor-driven	Willans & Robinson
1	Pump	Dry-vacuum		Maintains vacuum in condenser	Three-throw, vertical, motor-driven	Willans & Robinson
2	Pumps	Vertical centrifugal	24-in.	Circulate cooling water for condensers	Motor-driven	Canadian General Electric Co.
1	Switchboard	Gray marble	25 panels	Carries switches and meters	All low voltage on main switchboard	Canadian Westinghouse Co.
1	Motor - converter	Le-Cour patent	1,200-kw	Supplies power to street railway	In old power plant	Bruce Peebles & Co.
1	Crane	Hand traveling	25-ton	In turbine room		Whiting Foundry Equip. Co.

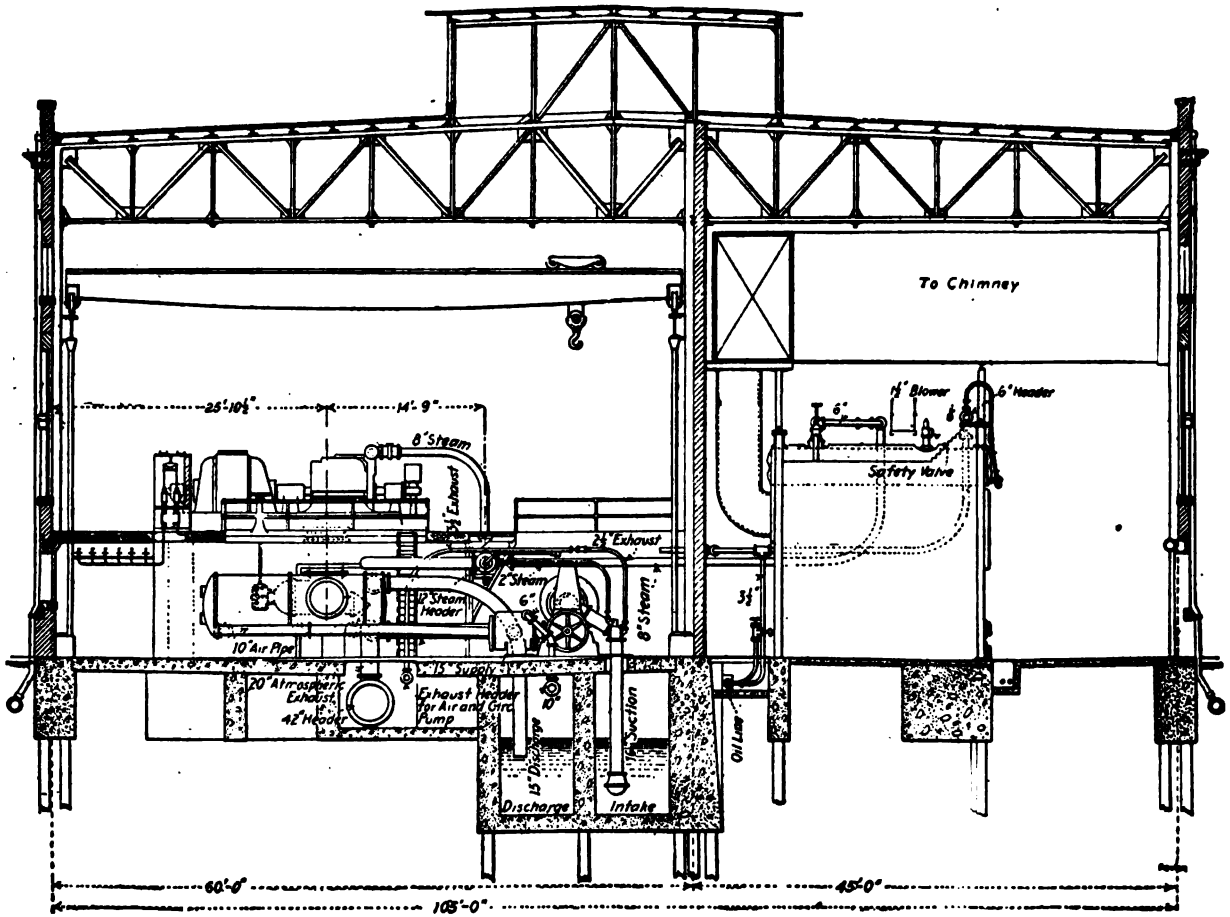

FIG. 23. ELEVATION OF ENGINE- AND BOILER-ROOMS.

FIG. 24.—PLAN OF STEAM AND EXHAUST LINES.

CHAPTER XVIII

COAL AND ASH HANDLING MACHINERY

General. Modern steam-power plants are generally equipped with mechanical stokers, an overhead bin system of coal storage, and the necessary elevating and conveying machinery to handle the coal from the cars to the storage.

In addition to the comparatively small amount of storage provided by overhead bins, power stations and manufacturing plants are frequently provided with an outside yard or concrete bin storage as an additional safeguard against a temporary stoppage of the coal supply due to strikes, car shortage, or other causes.

Yard Storage. When large amounts of coal are to be stored, 5,000 tons and over, one of the

FIG. 1. CLEARANCE DIAGRAMS—STANDARD FOUR-WHEEL CRANE.

most common methods of handling the coal is by means of a long radius locomotive crane equipped with a self-filling grab bucket. Fig. 1 shows one type with table of dimensions.

These cranes are self-propelled and may be either steam or electric driven, and have a capacity of 40 to 250 tons per hour, depending upon the size of bucket and crane employed.

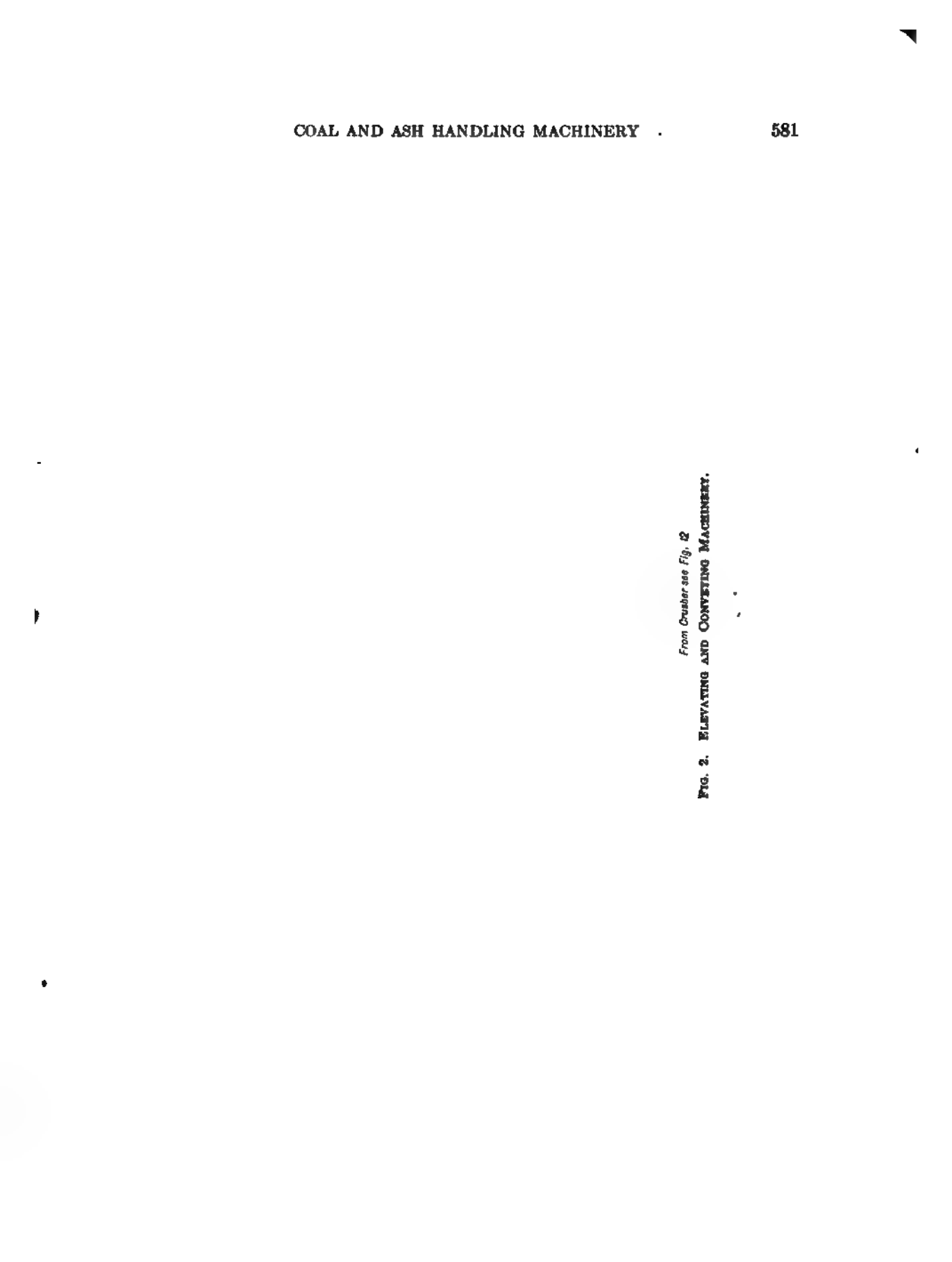

From Crusher see Fig. 12

FIG. 2. ELEVATING AND CONVEYING MACHINERY.

The coal may be handled direct from the cars or from a track hopper into which coal is dumped from the cars. The coal being stored is taken from this pit by the bucket and delivered to the storage pile. When reloading, the coal is taken directly from the pile and delivered into cars or back into the track hopper, from which it ordinarily passes through a crusher and thence to an elevator to be delivered into the overhead bins in the boiler house (Fig. 3).

A system of storage employed in small and medium-sized plants is shown by Fig. 2. Coal from the track hopper, after passing through a crusher, is elevated by means of a bucket

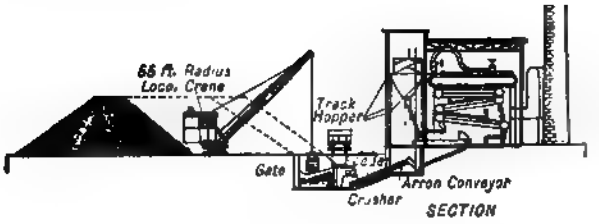

FIG. 3. STORING COAL AT POWER PLANT.

elevator to an overhead conveyor which distributes the coal over the pile. The conveyor is returned under the pile in a trench, gates are provided in the trench cover in order that the coal may be removed from the pile and delivered back into the conveyor. The coal is returned to the same elevator, which may, by proper spout arrangement, be delivered into a conveyor which runs over the overhead storage bins located in the boiler room.

Overhead Bunkers. Bunkers (Fig. 4) are invariably placed over the boilers, for the reason that the supply once in the bunker cannot be interrupted by accident to the machinery. There is no rule in reference to overhead bunker capacity. In small and medium-sized plants the capacity

is generally not over 3 or 4 days' supply at most. The weight of bituminous coal is ordinarily assumed 50 lb. per cu. ft. Bunkers should be constructed with hopper bottoms in order that they may be self-cleaning. An angle of 45 degrees is usually adapted in this connection.

Bunkers are constructed wholly of $\frac{1}{4}'' - \frac{3}{8}''$ steel plate and structural shapes or reinforced concrete.

The deterioration of steel bunkers is frequently quite rapid, due to the action of the acidulated water in the coal. Concrete linings, because of cracks, are not an absolute protection, and if used should be properly reinforced with a heavy wire mesh. Perhaps the best lining is one-inch tile laid in bitumastic cement.

The cheapest form of bunker is the suspension type, due to the fact that the plates are in tension only and require no structural members in the construction of the bunker proper, except for the ends. The curve of a suspended bunker is an equilateral hyperbola.

Bin Spouts and Gates. Coal is spouted directly, by gravity, from the overhead bins to the stoker hoppers or may first be delivered into a weighing lorry or automatic scale and thence into the spout (Fig. 5).

Fig. 6 shows an undercut gate closed under the bin bottom section, ready to be opened by a downward pull at the left-hand end of the operating lever. The gate swings in rigid hangers, while the hopper top of the movable stoker-spout extension is suspended by a universal joint which permits of leading the discharge end to any point within a radius of about 27° from the vertical center line for distributing the coal in the stoker hopper.

See Fig. 7 and Table 1 for dimensions of undercut bin gates.

Coal Crushers. Mechanical stokers, when bituminous coal is used for fuel, require the use of slack or crushed coal. In order to utilize the "run of mine" coal, a crusher becomes a necessity.

The crusher is ordinarily located in a pit below the track hopper, from which the coal is delivered by gravity to some form of apron conveyor or reciprocating feeder. The object of the feeder is to provide a regulated supply to the crusher, as an ordinary two-roll crusher will choke if the supply is not regulated.

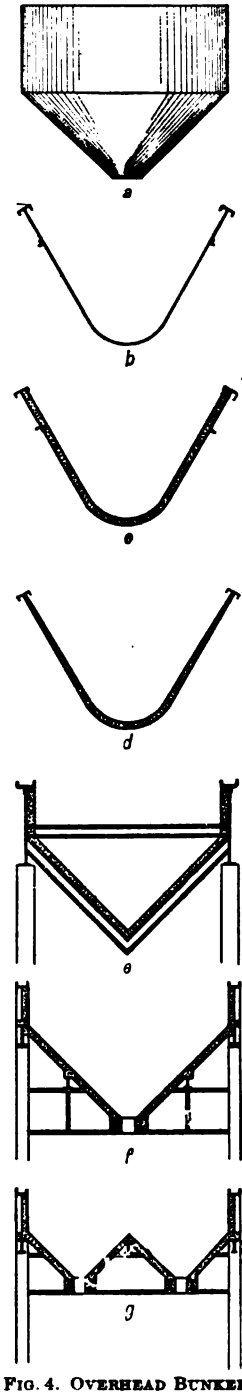

(*a*) Cylindrical Tank.

(*b*) Steel-Plate Suspension Bunker.

(*c*) Steel-Plate, Concrete Lined Suspension Bunker.

(*d*) Suspended Steel Straps, Reinforced Concrete Lining.

(*e*) Structural Steel Skeleton, Reinforced Concrete Lining, Longitudinal Girder Type.

(*f*) Similar to (*e*), but of the Cross-Girder Type.

(*g*) Same as (*f*).

FIG. 4. OVERHEAD BUNKERS.

An apron feeder consists of overlapping metal slats riveted to two strands of roller chain travelling very slowly on tracks. It displaces the reciprocating type of feeder when the coal must be lifted in transit or carried some distance to the crusher.

Track hoppers are ordinarily constructed of ¼-inch steel plate with 4″ x 3″ x ⅜″ stiffener angles. The dimensions in plan should not be less than about 10 ft. x 10 ft., which is sufficient to receive the discharge from both doors of hoppered cars. They are generally suspended from the track girders, which may be 18″ or 20″ I beams. The valley slope is ordinarily 35°.

Fig. 8 and Table 2 give the dimensions of hoppers and other data by the *Link Belt Co.* The arrangement shows a reciprocating type feeder. The power required for the crusher is approximately 10 to 12 h.p. up to 50 tons per hour and 15 to 20 h.p. for 75 tons per hour capacity.

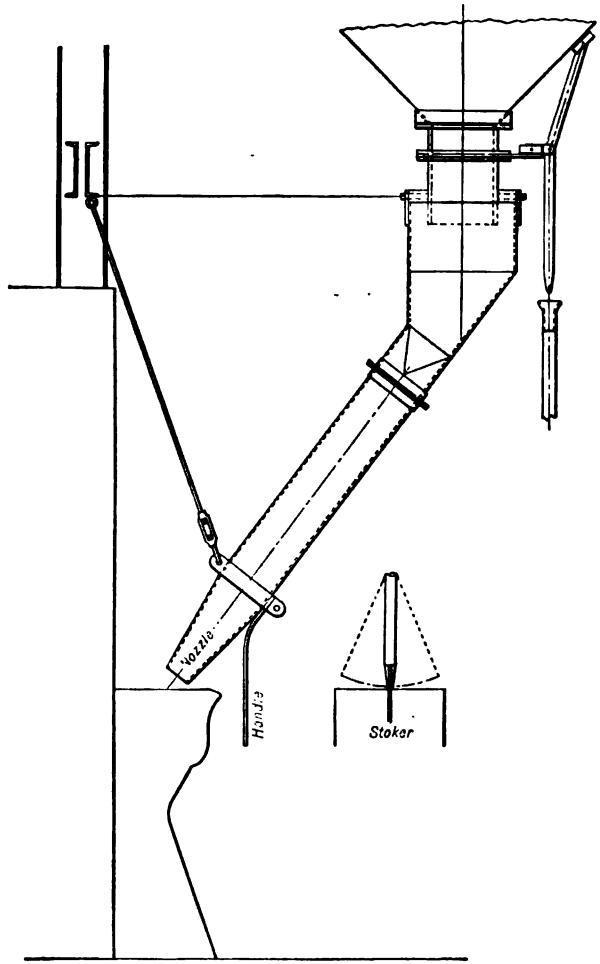

FIG. 5. STOKER SPOUT.

FIG. 6. UNDERCUT GATES APPLIED TO STOKER SPOUTS.

TABLE 1

DIMENSIONS IN INCHES

Size	Style	A	B	C	D	E	F	H	K	L	M	O	P	R	T	W	Y
12 x 12	1	12	12	18	18	5½	0	1 15/16	10	28	14	28½	10°	17½°	5/16	0	11
12 x 12	2	12			16				10	28	14	28½	10°	17½°	5/16		
12 x 12	3	12	12	18	18	5½	0	1 15/16	10	28	14	28½	10°	17½°	5/16	0	11
12 x 12	4	12			19			5¼	10	28	14	28½	10°	17½°	5/16		
14 x 14	1	14	14	21	21	0	0	1½	9	32	16	29	12°	18°	¼	14	14
16 x 16	1	16	16	23	23	4½	4½	2½	9	36	18	19½	16°	18°	¼	4	4
16 x 16	3	16	16	29	29	4½	4½	2½	9	36	18	19½	18°	18°	¼	4	4

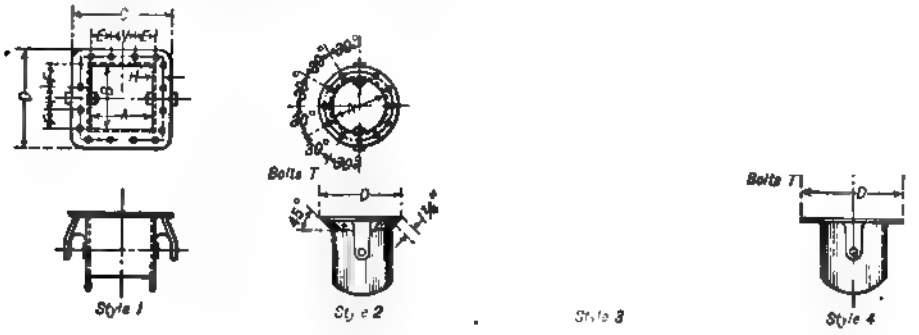

FIG. 7. UNDERCUT GATES FOR SPOUTS.
(Link Belt Co.)

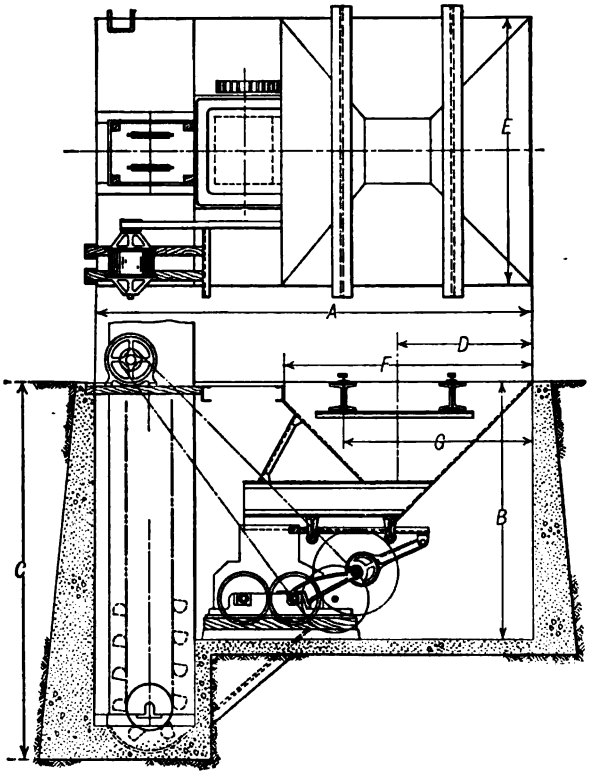

FIG. 8. TRACK HOPPER WITH RECIPROCATING FEEDER, CRUSHER, AND ELEVATOR.

TABLE 2

DIMENSIONS OF HOPPERS AND CAPACITIES OF ELEVATORS

(Fig. 8)

Size of Hopper	A	B	C	D	E	F	G	Size of Crusher Rolls (Diam. x Length)	Cap'y of Elevator in Tons per Hour
6′ 6″ x 9′ 0″...	15′ 1″	8′ 6¾″	12′ 7″	3′ 2″	9′ 1″	6′ 6¼″	4′ 6″	20″ x 24″	30
10′ 0″ x 10′ 0″...	17′ 8″	9′ 6″	15′ 0″	5′ 2½″	10′ 1″	10′ 0¼″	7′ 8″	28″ x 24″	35 to 45
11′ 0″ x 12′ 0″...	19′ 7¹¹/₁₆″	11′ 0″	14′ 8″	6′ 1″	12′ 1″	11′ 3″	8′ 6½″	28″ x 36″	78

Elevators. Bucket elevators for handling coal as usually constructed consist of a series of steel buckets, equally spaced and carried by a two-strand steel chain. They are known as *centrifugal discharge* when the material is discharged by centrifugal force over the head shaft, and *positive or perfect discharge* when provided with a pair of idler sprockets which draw back the buckets, completely inverting them and allowing a positive gravity discharge.

These elevators are loaded in the boot. See Figs. 9 and 10 (*Link Belt Co.*). The speed of perfect discharge elevators is limited from 80 to 150 ft. per min. The centrifugal discharge elevators are operated at the following speeds:

Dia. Head Sprocket	R. P. M.	Ft. P. M.	Dia. Head Sprocket	R. P. M.	Ft. P. M.
15	42	165	30	35	274
18	40	188	33	34	294
21	38	209	36	34	320
24	37	232	40	33	345
27	36	254	48	32	402

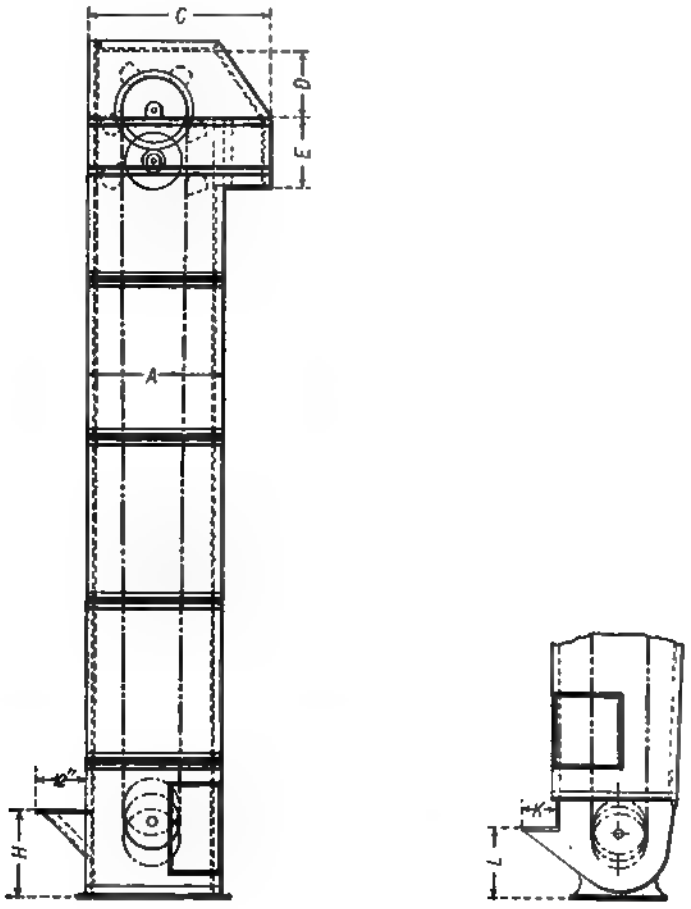

FIG. 9.

TABLE 3

CENTRIFUGAL DISCHARGE ELEVATORS

(Single-Strand Chain) (Fig. 9) Dimensions in Inches

Size of Buckets	A	*B	C	D	E	F	G	H	J	K	L
5 x 3½ to 7 x 4½	36	13¼	49	16	19	13¼	12¼	25	14¾	9¼	18½
8 x 5 to 10 x 6	38½	18¼	52½	19	21	15½	14½	27	17¾	9½	18½
12 x 7 to 14 x 7	48	22⅛	64½	22	27	23¼	22	31	26⅜	14½	28¼

* The inside clearance and other width dimensions should be increased where unbreakable materials are to be handled.

TABLE 3—*Continued*

MISCELLANEOUS DATA

Size of Bucket	Number of Boot	Rev. per Min.		Tons per Hour	Size of Bucket	Number of Boot	Rev. per Min.		Tons per Hour
		Head Shaft	Counter Shaft				Head Shaft	Counter Shaft	
5 x 3½	13½	48	185	3.4	10 x 6	13½	45	175	18
6 x 4	13½	48	185	5.8	12 x 7	20½	43	172	30
7 x 4½	13½	48	185	9	14 x 7	20½	43	172	37
8 x 5	13½	45	175	11					

Capacities of material weighing about 50 lb. per cubic foot are given in tons per hour. Capacities can be increased with the same sizes of buckets, by changes which would also change some of the dimensions given above.

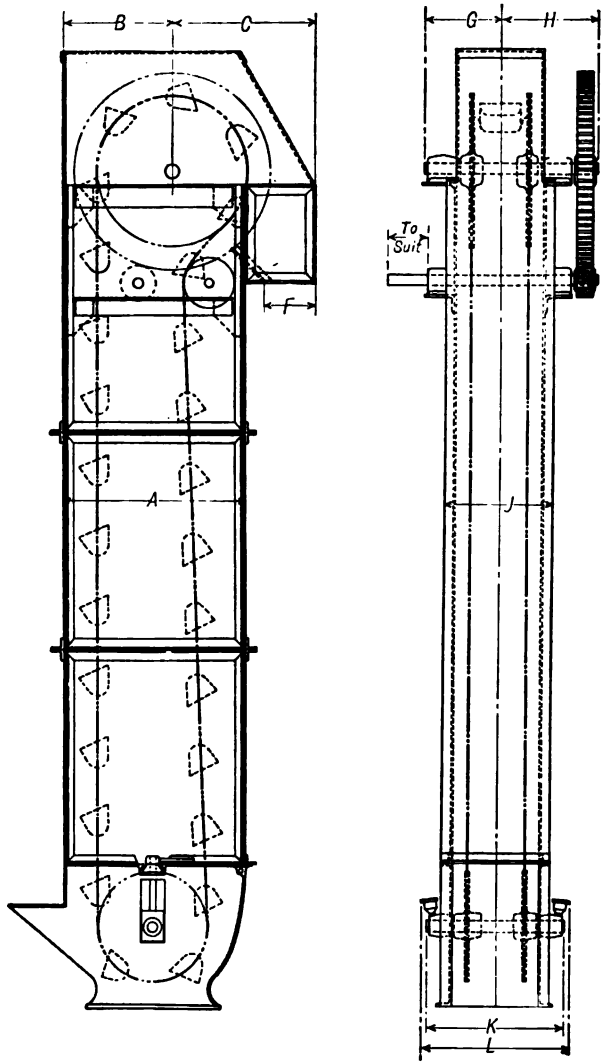

FIG. 10. PERFECT DISCHARGE ELEVATOR.

Capacity in Tons per Hour

FIG. 11. CAPACITIES OF BUCKET ELEVATORS (*Stephens-Adamson Mfg. Co.*)

TABLE 4

PERFECT DISCHARGE ELEVATORS

(Two-Strand Chain)

(Fig. 10)

Dimensions in Inches, and Capacities in Tons per Hour, of material weighing about 50 lb. per cu. ft.

Size of Bucket	A	B	C	G	H	J	K	L	Tons	R.P.M. of Counter-shaft
10 x 6	41½	23	33½	20	26	26	37	39	14½	100
12 x 7	41½	23	33½	21	27	28	39	41	19	100
14 x 7	41½	23	33½	22	28	30	41	43	23	100
16 x 7	41½	23	33½	23	29	32	43	45	42	100
18 x 8	44½	24½	35	24	30	34	45	47	65	90
24 x 8	44½	24½	35	27	33	40	51	53	90	90

Horsepower of Elevators. The following formula allows 100% for friction and is found to give very conservative results:

$$\text{Horsepower} = \frac{H \times T}{500} \quad \text{where } H = \text{height of lift in feet.}, \; T = \text{tons per hour.}$$

Example. Chart (Fig. 11) is based on buckets spaced 16 inches. Buckets are figured ¾ full. For other types of buckets refer to quadrant which gives capacity to be carried by each bucket rather than total capacity of bucket.

To handle 42 tons of coal per hour at a speed of 280 feet per minute—Enter chart at right, move horizontally to coal diagonal, thence down to required speed of 280. This intersection shows a 12 x 7 bucket to be suitable or any bucket which will carry 235 cubic inches. Use 24-inch head pulley at 44 r.p.m.

Scraper Conveyors. The type of conveyor ordinarily used for handling coal is known as the scraper flight conveyor. They are constructed of one or two strands of chain carrying steel flights which scrape the material along a trough and discharge through bottom slide gates.

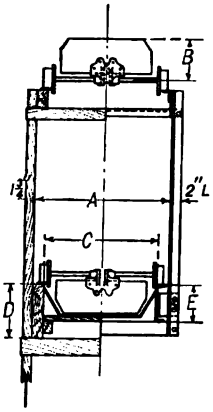

FIG. 12. SINGLE STRAND FLIGHT CONVEYOR. (SUSPENDED FLIGHTS WITH ROLLERS.—TABLE 6.)

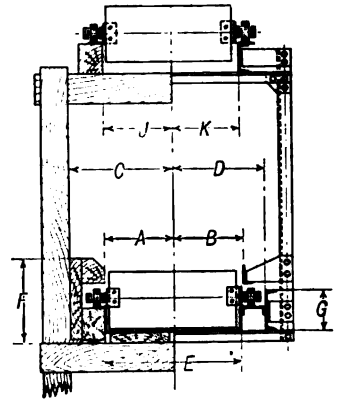

FIG. 13. TWO-STRAND FLIGHT CONVEYOR WITH STEEL ROLLER CHAIN.—TABLE 7.

They operate horizontally or on an incline up to 45°. See Figs. 12 and 13. They are economical coal conveyors up to 100 tons per hour and for distances under 200 feet with a speed of from 75 to 125 feet per minute.

They are particularly advantageous for delivering to a series of bins. They cost less to install than belt conveyors, but require more power and are subject to greater wear.

TABLE 5

CAPACITIES OF FLIGHT CONVEYORS

In Tons of Coal per Hour at 100 Feet per Minute

Size of Flights, Inches	Horizontal				Inclined		
	Spaced			Pounds Carried per Flight	Spaced 24 Inches		
	16 Inches	18 Inches	24 Inches		10 Degrees	20 Degrees	30 Degrees
4 x 10	34	30	22	15	18	14	10
4 x 12	43	38	28	19	24	18	13
5 x 12	52	46	34	23	28	22	16
5 x 15	70	62	46	31	40	31	22
6 x 18	..	80	60	40	49	40	31
8 x 18	..	120	90	60	72	57	48
8 x 20	..	...	105	70	84	66	56
8 x 24	..	...	135	90	120	96	72
10 x 24	..	...	172	115	150	120	90

Horsepower of Flight Conveyors.

Example. Read from tons per hour at left of chart (Fig. 14), following horizontally to curve representing length of conveyor, thence down to the required horsepower. If conveyor is inclined, repeat, using curve representing the vertical lift. Add the two results for total power required.

Given: 140 tons per hour, conveyor 100 feet long, 30 feet lift.

Follow from 140 tons to 100-ft. long curve and down to 10 horsepower, then again from 140 tons to 30-ft. lift curve and down to 4 horsepower. Total power required is therefore 14 horsepower.

TABLE 6

SUSPENDED FLIGHT CONVEYOR

Dimensions (See Fig. 12)

Size of Flights, Inches	A	B	C	D	E
14 x 6	1′ 11 3/4″	7 1/8″	1′ 6 1/4″	9 1/4″	7″
19 x 8	2′ 4 7/8″	9 3/16″	1′ 11 3/8″	11 1/4″	9″
24 x 10	2′ 9 7/8″	11 1/16″	2′ 4 7/8″	11 3/4″	12″

Capacities in Tons of Coal per Hour at 100 F.P.M.

Size of Flights, Inches	Flights Spaced	Inclination			
		5°	10°	20°	30°
14 x 6	18″	60	50	40	30
14 x 6	24″	45	37	30	22
14 x 6	36″	30	25	20	15
19 x 8	18″	100	83	66	50
19 x 8	24″	75	62	50	37
19 x 8	36″	50	42	33	25
24 x 10	18″	170	142	114	85
24 x 10	24″	128	106	85	64
24 x 10	36″	85	71	57	43

FIG. 14. HORSEPOWER OF FLIGHT CONVEYORS FOR ESTIMATING PURPOSES ONLY
(*Stephens-Adamson Mfg. Co.*)

TABLE 7

DOUBLE-STRAND FLIGHT CONVEYOR

Dimensions (See Fig. 13)

Size of Flights, Inches	A	H	H	D	E	F	G	J	K
16 x 8	1′ 5″	1′ 4 1/2″	2′ 1 3/4″	2′ 1″	1′ 5″	10 3/4″	6″	1′ 5″	1′ 4 1/2″
20 x 10	1′ 9″	1′ 8 1/2″	2′ 5 1/2″	2′ 5″	1′ 9″	12 1/2″	8″	1′ 9″	1′ 8 1/2″
24 x 10	2′ 1 1/2″	2′ 1″	2′ 10 3/4″	2′ 9 1/4″	2′ 1 1/2″	12 1/2″	8″	2′ 1″	2′ 1″
30 x 12	2′ 8″	2′ 6 1/2″	4′ 0 1/2″	3′ 3″	2′ 7″	14 1/2″	10″	2′ 7″	2′ 6 1/2″
36 x 12	3′ 1 1/2″	3′ 0 1/2″	4′ 6 1/2″	3′ 9″	3′ 1″	14 1/4″	10″	3′ 1″	3′ 0 1/2″

Elevator-Conveyor. A combination elevator-conveyor is frequently employed to advantage for handling coal, never for ashes, as it scrapes the material along a trough, similar to the scraper

FIG. 1c. GRAVITY DISCHARGE ELEVATOR-CONVEYOR.
(*Link Belt Co.*)

conveyor, discharging through bottom slide gates. Fig. 15 shows the details of a gravity discharge elevator-conveyor with the carrier receiving from a track hopper and running up one side and over the top of storage bins in the boiler house. If hopper and feeder are on other side of elevator portion of carrier, and direction of buckets and chain reversed accordingly, the conveyor portion will carry on lower horizontal run. The table following gives the power required to operate this combination. Table of capacities is given by Fig. 15.

TABLE 8

HORSEPOWER OF ELEVATOR-CONVEYORS*

(*Link Belt Co.*)

Size of Bucket	12 by 12 In.			24 by 15 In.			36 by 20 In.		48 by 24 In.	
Spacing	18 In.	24 In.	36 In.	18 In.	24 In.	36 In.	18 In.	24 In.	36 In.	48 In.
Hp. for each 10 feet vertical lift. . . .	0.46	0.35	0 23	1 35	1.0	0.67	3.8	1.9	3.5	2.7
Hp. for each 100 ft. horizontal, running empty	1.2	1.1	0 9	1.7	1.5	1.3	2.4	1.6		
Hp. for each 100 ft. horizontal, handling anthracite	2.5	2 1	1.6	5.3	4.3	3 1	12.4	6.6		
Hp. for each 100 ft. horizontal, handling bituminous.	3.2	2 6	1 9	7.4	5.8	4 2	18.0	9.4		

* Add 5 per cent for each turn.

Pivoted Bucket Carriers. This type of conveyor (Fig. 16) is designed and manufactured to meet the extremes of conveyor service—for power plant duty, handling coal and ashes, for cement

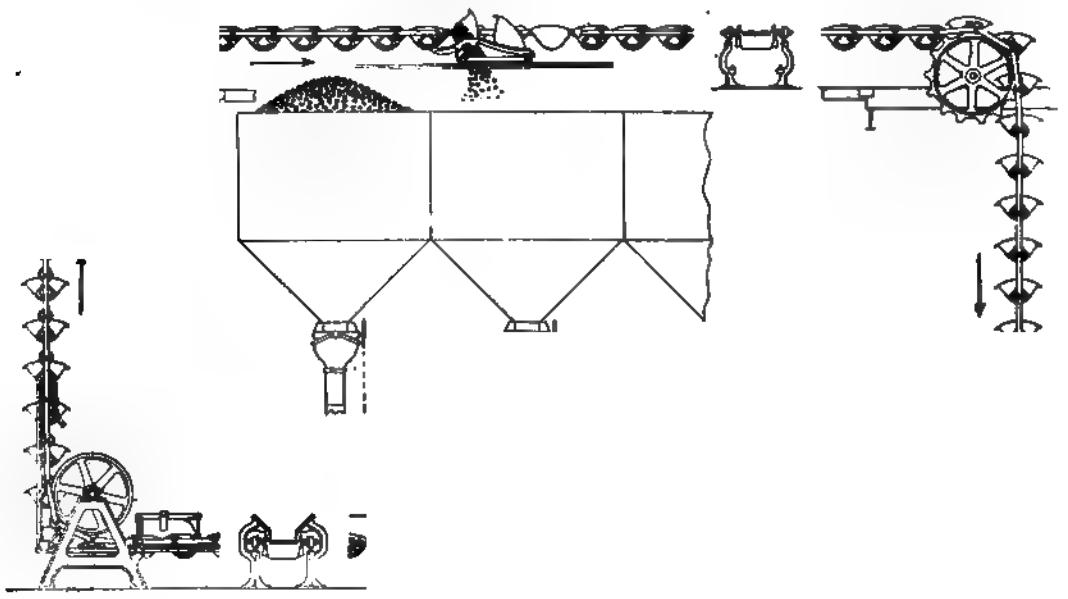

FIG. 16. DIAGRAM SHOWING OPERATION OF THE PECK CARRIER.

clinker or other hot, gritty material. It *carries* its load in buckets suspended from a pivot shaft, and, consequently, conveys or elevates as required. It is the most conveniently adapted to power plant requirements of any type of conveyor. The initial cost is higher than other types, but its operating expense is low. Consisting of a continuous series of buckets pivotally sus-

FIG. 17. GENERAL DIMENSIONS OF 24-INCH PITCH CARRIERS (UPWARD RUN

pended between two endless chains, these conveyors represent the highest development of the conveying art. As the buckets at all times maintain their carrying position by gravity, a single carrier can transport material horizontally, vertically, and again horizontally, or in any desired path.

These carriers have the following advantages:

1. The material is *carried* and the buckets are supported by rollers. Destructive friction

and injury to the material itself are therefore eliminated, and the power required for operation reduced to the minimum.

2. The ability of the one machine to elevate and convey avoids transfers, which are always troublesome, take up valuable space, and necessitate deep pits. The driving connections are also correspondingly simplified.

3. The material is readily discharged at any desired point.

FIG. 17a. GENERAL DIMENSIONS OF 24-INCH PITCH CARRIERS (DOWNWARD RUN).

4. Their operation is silent, and as they are run at slow speed there is no vibration.

From records kept for a period of seven years the maintenance cost for one type of pivoted bucket carrier shows a cost of $0.0036 per ton of coal handled.

Figs. 17 and 18 give dimensions of the *Peck* Carrier.

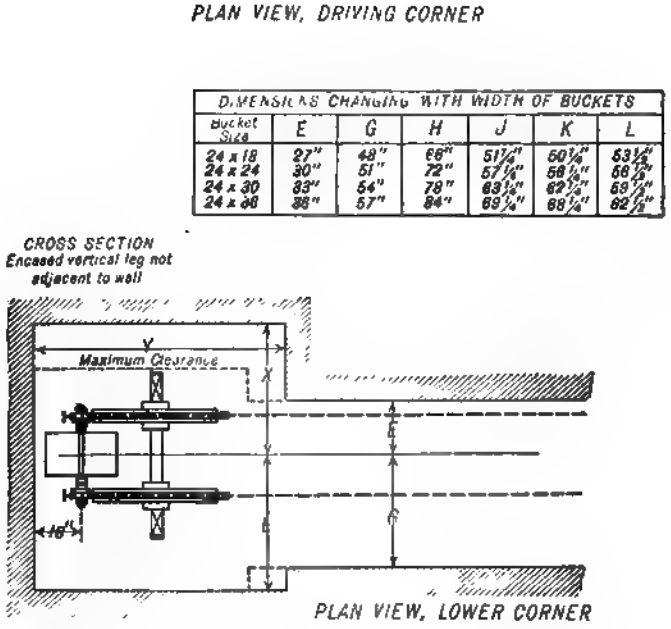

FIG. 18. GENERAL DIMENSIONS OF 24-INCH PITCH CARRIERS (PLAN AT RISE).

TABLE 9
DIMENSIONS OF PECK CARRIER

Bucket	Pitch of Chain	Carrying Capacity of Bucket in Cubic Feet	Capacity of Coal—Tons per Hour	Speed Feet per Minute
18" x 15"	18"	0 68	15– 20	30–40
18" x 21"	18"	0 94	20– 30	30–40
24" x 18"	24"	1.68	40– 50	40–50
24" x 24"	24"	2 24	55– 70	40–50
24" x 30"	24"	2.80	75–100	40–50
24" x 36"	24"	3.36	90–120	40–50
30" x 24"	30"	3.50	95–120	45–60
30" x 30"	30"	4 37	110–160	45–60
30" x 36"	30"	5.25	140–190	45–60
36" x 36"	36"	8 50	210–330	[illegible]

Ash-Handling Machinery. In addition to the pivoted bucket carrier previously described ashes may be conveyed by means of a drag-chain conveyor (Figs. 19 and 20).

The conveyor consists simply of a single-strand grit-proof chain about 7 inches wide running very slowly in a cast-iron trough. The chain rides on the ashes and does not wear the trough. This conveyor has a capacity of approximately 2 tons per hour and requires 3 hp. per 100 feet of run. The cost of installation is low and it occupies very little space.

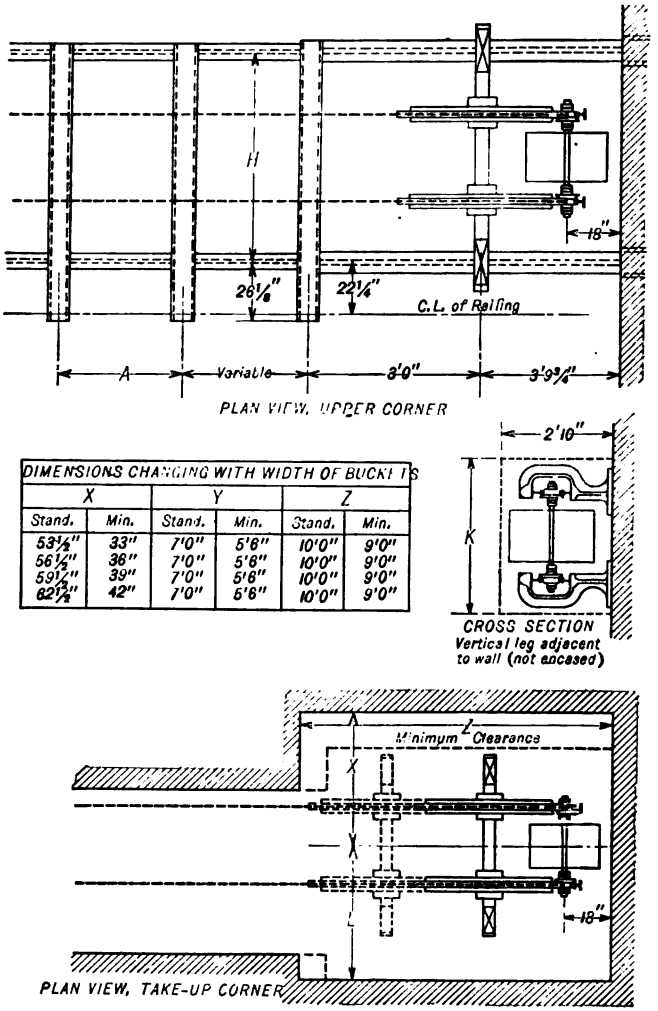

DIMENSIONS CHANGING WITH WIDTH OF BUCKETS

X		Y		Z	
Stand.	Min.	Stand.	Min.	Stand.	Min.
53½"	33"	7'0"	5'6"	10'0"	9'0"
56½"	36"	7'0"	5'8"	10'0"	9'0"
59½"	39"	7'0"	5'8"	10'0"	9'0"
62½"	42"	7'0"	5'6"	10'0"	9'0"

FIG. 18*a*. GENERAL DIMENSIONS OF 24-INCH PITCH CARRIER (PLAN AT DROP).

This type of conveyor when installed in conjunction with a skip ash hoist to elevate the ashes to an overhead bin makes a satisfactory installation for small and medium-size plants.

Electric Skip Hoist for Ashes. This type of hoist is for moderate-size power houses and consists of a single bucket of 20 to 50 cubic feet capacity operated by a drum direct connected by worm gearing to an A.C. or D.C. motor, the gearing being enclosed and running in oil. A band brake on armature shaft stops the motor promptly at top and bottom of lift. The electric

switch is controlled by a travelling nut on drum shaft (Fig. 21). The bucket may also be elevated by means of a hydraulic cylinder if preferred.

Steam Jet Ash Conveyors. A comparatively recent type of ash elevator and conveyor is constructed of all cast-iron flanged pipe provided with expanding nozzle steam jets at the turns or ells. Fig. 22 shows a complete installation of the *Green Engineering Co.'s* steam jet ash conveyor. The ashes are sucked into the hoppers, located in the suction line below the boiler ash pits. Large clinker must be broken up by hand before introducing same into the

FIG. 19 ASH CONVEYOR.

conveyor. An 8-inch conveyor of this type will handle 6 to 8 tons of ashes per hour with a steam consumption of 1,800 to 2,400 lb. high pressure steam per hour.

The maintenance cost averages from one to one and one-half cents per ton of ashes handled. The cost of installation, including the receiving bin, for a 3,000 boiler horsepower plant is approximately $2,200.00 complete.

Coal-Handling Installations. Fig. 23 shows a coal-handling installation designed by *R. H.*

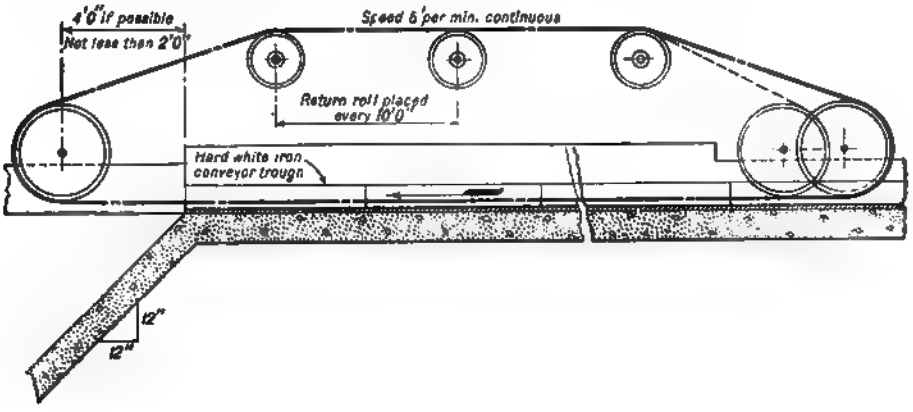

FIG. 20. ASH CONVEYOR.

TABLE 10. (See Fig. 20)

DIMENSIONS AND CAPACITIES OF DRAG-CHAIN ASH CONVEYORS

A	B	C	D	Capacity in Tons per Hour
2′ 1¼″	23¾″	13½″	10½″	1¼
2′ 1⅝″	23¾″	15½″	10½″	1¾
2′ 4⅛″	2′ 2⅝″	16½″	13¼″	2⅜
2′ 7½″	2′ 5¼″	19¼″	16″	2¾
2′ 11⅞″	2′ 9″	22″	19¼″	3½

Beaumont Co., consisting of a 10′ x 12′ track hopper, 24″ x 30″ crusher, 40-ton V-bucket elevator and flight conveyor. Ash hoppers under boilers discharge direct into railway cars.

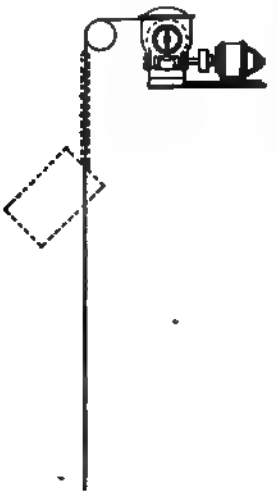

Figs. 24, 25, and 26 show installations of pivoted bucket carriers designed to handle both coal and ashes.

Fig. 27 shows a coal-handling equipment designed by the *Jeffrey Co.* This equipment consists of a travelling bridge with an electrically operated grab bucket. Coal is taken from the cars by means of the bucket, which discharges directly into hoppers and is then spouted into the concrete bunkers. Ashes are handled by dump carts in the basement.

BELTING, GEARING, AND SHAFTING

General. The following data on mechanical power transmission are given as a convenient reference.

Belt Drives. Table 12, following, may be used in proportioning the size of belt required for fan, pump, conveyor, etc., drives. The values given by the table are based on an arc of contact of 180 degrees. As the driver is usually considerably smaller in diameter than the driven pulley, these values should be reduced as shown by the percentages given in Table 11, page 606.

FIG. 21

FIG. 22. STEAM JET ASH CONVEYOR.

FIG. 23. COAL HANDLING INSTALLATION (H. H. Beaumont Co.)

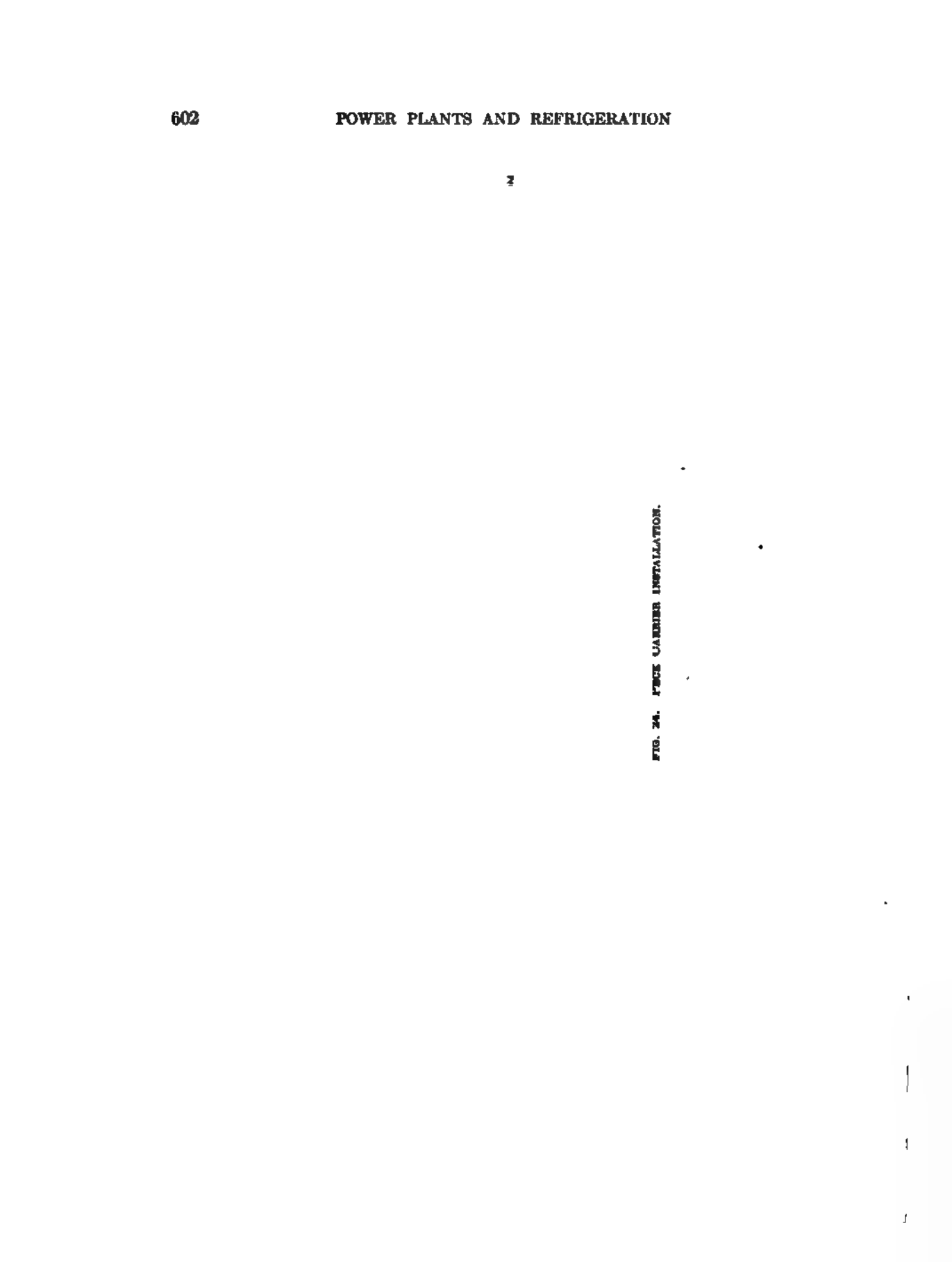

FIG. 24. PECK CARRIER INSTALLATION.

Fig. 25. Stephens-Adamson Bucket Carrier Installation.

FIG. 26. JEFFREY ENDLESS OVER-LAPPING LIP PIVOTED BUCKET CONVEYOR AND ELEVATOR.

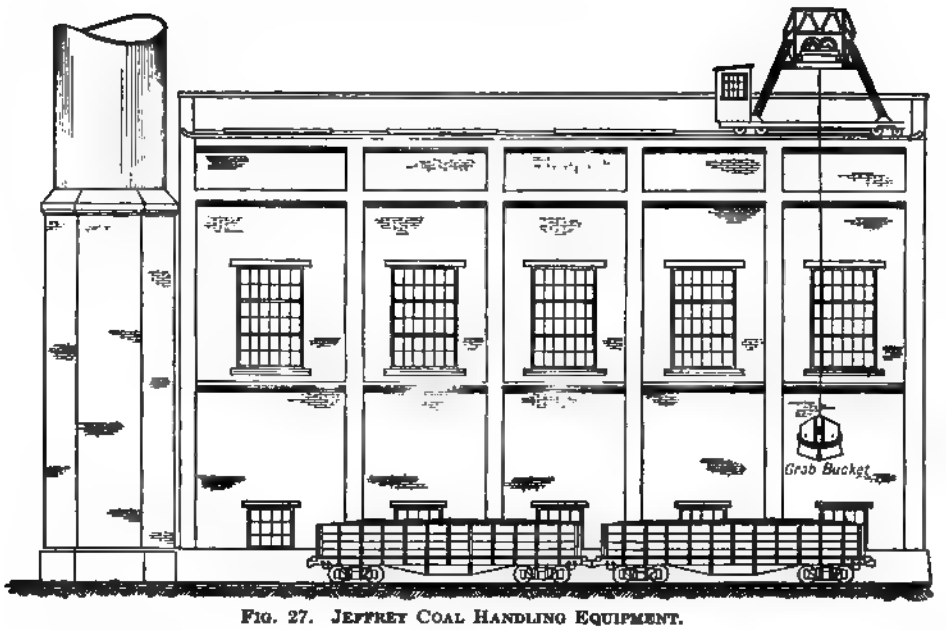

FIG. 27. JEFFREY COAL HANDLING EQUIPMENT.

TABLE 11

POWER TRANSMITTED BY BELTS

Arc Contact Degrees	Percentage of Power Transmitted	Arc Contact Degrees	Percentage of Power Transmitted
180	100	130	80
170	96	120	76
160	93	110	71
150	89	100	67
140	85	90	61

TABLE 12

HORSEPOWER OF BELTS

Pulley Running at 100 R.P.M.

Diameter of Pulley Inches	Width of Belts																	
	2"	3"	4"	5"		6"		8"		10"		12"	14"	16"	18"	20"	22"	24"
	S	S	S	S	D	S	D	S	D	S	D	D	D	D	D	D	D	D
	4-Ply	4-Ply	4-Ply	4-Ply	6-Ply	4-Ply	6-Ply	4-Ply	6-Ply	4-Ply	6-Ply	6-Ply	8-Ply	8-Ply	8-Ply	8-Ply	8-Ply	8-Ply
6	0.29	0.43	0.57	0.71	1.3	..	..	..	....	..	....	....	....	....	....	....	....	....
7	.33	.50	.67	.83	1.5	1.0	1.8	..	....	..	....	....	....	....	....	....	....	....
8	.33	.57	.76	.95	1.7	1.1	2.1	..	....	..	....	....	....	....	....	....	....	....
9	.43	.64	.86	1.10	2.0	1.3	2.4	1.9	3.8	..	....	....	....	....	....	....	....	....
10	.48	.71	.95	1.20	2.2	1.4	2.6	2.1	4.2	..	....	....	....	....	....	....	....	....
11	.52	.79	1.00	1.30	2.4	1.6	2.9	2.3	4.6	2.9	5.8	....	....	....	....	....	....	....
12	.57	.86	1.10	1.40	2.6	1.7	3.1	2.5	5.0	3.1	6.3	....	....	....	....	....	....	....
13	.62	.93	1.20	1.50	2.8	1.9	3.4	2.7	5.4	3.4	6.8	10.2	....	....	....	....	....	....
14	.67	1.00	1.30	1.70	3.1	2.0	3.7	2.9	5.9	3.7	7.3	11.0	....	....	....	....	....	....
15	.71	1.10	1.40	1.80	3.3	2.1	3.9	3.1	6.3	3.9	7.9	11.8	13.8	....	....	....	....	....
16	.76	1.10	1.50	1.90	3.5	2.3	4.2	3.4	6.7	4.2	8.4	12.6	14.7	....	....	....	....	....
17	.81	1.20	1.60	2.00	3.7	2.4	4.5	3.6	7.1	4.5	8.9	13.4	15.6	17.8	....	....	....	....
18	.86	1.30	1.70	2.10	3.9	2.6	4.7	3.8	7.5	4.7	9.4	14.1	16.5	18.8	....	....	....	....
19	.90	1.40	1.80	2.30	4.1	2.7	5.0	4.0	8.0	5.0	9.9	14.9	17.4	19.9	22.4	....	....	....
20	.95	1.40	1.90	2.40	4.4	2.9	5.2	4.2	8.4	5.2	10.5	15.7	18.3	21.0	23.6	....	....	....
21	1.00	1.50	2.00	2.50	4.6	3.0	5.5	4.4	8.8	5.5	11.0	16.5	19.3	22.0	24.8	27.5	....	....
22	1.00	1.60	2.10	2.60	4.8	3.1	5.8	4.6	9.2	5.8	11.5	17.3	20.2	23.0	25.9	28.8	....	....
23	1.10	1.60	2.20	2.70	5.0	3.3	6.0	4.8	9.6	6.0	12.0	18.1	21.1	24.1	27.1	30.1	33.1	....
24	1.10	1.70	2.30	2.90	5.2	3.4	6.3	5.0	10.0	6.3	12.6	18.8	22.0	25.1	28.3	31.4	34.5	....
25	1.20	1.80	2.40	3.00	5.5	3.6	6.6	5.2	10.5	6.6	13.1	19.7	22.9	26.2	29.5	32.8	36.0	39.3
26	1.20	1.90	2.50	3.10	5.7	3.7	6.8	5.4	10.9	6.8	13.6	20.4	23.8	27.2	30.6	34.1	37.5	40.9
27	1.30	1.90	2.60	3.20	5.9	3.9	7.1	5.7	11.3	7.1	14.1	21.2	24.7	28.3	31.8	35.4	38.9	42.4
28	1.30	2.00	2.70	3.30	6.1	4.0	7.3	5.9	11.7	7.3	14.7	22.0	25.7	29.3	33.0	36.7	40.3	44.0
29	1.40	2.10	2.80	3.50	6.3	4.1	7.6	6.1	12.1	7.6	15.2	22.8	26.6	30.4	34.2	38.0	41.7	45.5
30	1.40	2.10	2.90	3.60	6.5	4.3	7.9	6.3	12.6	7.9	15.7	23.6	27.5	31.4	35.3	39.3	43.2	47.1
31	1.50	2.20	3.00	3.70	6.8	4.4	8.1	6.5	13.0	8.1	16.2	24.4	28.4	32.5	36.5	40.6	44.7	48.7
32	1.50	2.30	3.00	3.80	7.0	4.6	8.4	6.7	13.4	8.4	16.8	25.1	29.3	33.5	37.7	41.9	46.1	50.3
33	1.60	2.40	3.10	3.90	7.2	4.7	8.6	6.9	13.8	8.6	17.3	25.9	30.2	34.6	38.9	43.2	47.5	51.8
34	1.60	2.40	3.20	4.00	7.4	4.9	8.9	7.1	14.2	8.9	17.8	26.7	31.2	35.6	40.1	44.5	49.0	53.4
35	1.70	2.50	3.30	4.20	7.6	5.0	9.2	7.3	14.7	9.2	18.3	27.5	32.1	36.6	41.2	45.8	50.4	55.0
36	1.70	2.60	3.40	4.30	7.9	5.1	9.4	7.5	15.1	9.4	18.8	28.3	33.0	37.7	42.4	47.1	51.8	56.5

"S" and "D" refer respectively to single and double leather belts, while "ply" refers to rubber belting.

Rim speed should not exceed 5000 feet per minute for standard pulleys. To find rim speed, multiply diameter of pulley in feet by 3.1416, and again by the revolutions per minute of the pulley.

The face of pulley should be made approximately ½ inch wider than the belt.

Rope Drives. Rope drives are more expensive than belt drives to install, but under certain

conditions—as, for example, the transmission of power a considerable distance or around corners—this form of drive is frequently used.

TABLE 13

HORSEPOWER, MANILA ROPE

American System (Single Rope)

Diameter Rope Inches	Velocity—Feet per Minute										
	1000	1300	1600	1900	2400	3000	3600	4200	4800	5400	6000
¾	2.77	3.56	4.32	5.05	6.21	7.29	8.16	8.71	8.83	8.57	7.72
⅞	3.78	4.85	5.88	6.88	8.43	9.94	11.09	11.82	11.99	11.63	10.56
1	4.93	6.34	7.69	8.99	11.01	12.96	14.49	15.45	15.67	15.21	13.80
1 ⅛	6.25	8.03	9.71	11.35	13.95	16.42	18.35	19.57	19.85	19.25	17.48
1 ¼	7.61	9.94	12.02	14.11	17.22	20.30	22.63	24.15	24.50	23.79	21.59
1 ⅜	9.34	11.98	14.53	16.99	20.82	24.51	27.42	29.22	29.63	28.75	26.12
1 ½	11.01	14.25	17.28	20.22	24.80	29.21	32.60	34.81	35.20	34.23	31.13
1 ¾	15.11	18.41	23.53	27.55	33.75	39.82	44.41	42.45	48.02	46.71	42.31
2	19.70	25.33	30.73	35.95	44.11	51.85	58.00	61.85	62.50	60.95	55.28

The horsepower of ropes when used with the English system (multiple ropes) is from 10% to 20% lower than the above ratings. The number of wraps or ropes required is found by dividing the total power to be transmitted by the power transmitted by a single rope as given by Table 13.

TABLE 14

DATA ON MANILA ROPE

Diameter Rope Inches	Approximate Weight per Foot, Pounds	Approximate Tension Weight	Smallest Diameter of Sheaves, Inches	Maximum R.P.M. Smallest Sheaves	Pitch of Grooves, Inches
¾	0.20	150	28	760	1 ⅛
⅞	.26	200	32	650	1 ¼
1	.34	250	36	570	1 ½
1 ⅛	.43	350	40	510	1 ⅝
1 ¼	.53	400	46	460	1 $^{13}/_{16}$
1 ⅜	.65	500	50	415	1 $^{13}/_{16}$
1 ½	.77	600	54	380	2 $^{5}/_{16}$
1 ¾	1.04	850	64	330	2 ⅞
2	1.36	1100	72	290	2 ⅞

Shafts. Figs. 28 and 29 show the most typical arrangements of wheels and bearings for which it is usually desired to calculate the size of shafts.

Fig. 28 covers cases of ordinary belt, rope, chain and gear drives, also single-strand chain elevators and conveyors.

Fig. 29 covers cases of double-strand elevators and conveyors in connection with belt, rope, chain or gear drives.

Formula:

Let H_1, H_2 = pull in lb. or effective driving force at pitch line of gear, sprocket or the difference in tension ($T_1 - T_2$) on the slack and tight side of a belt.

R = r.p.m. of gear, sprocket or pulley.

$D = 2G$ or $2E$ = pitch diam. of gear, sprocket or pulley in feet.

$$\text{Then } H_1, H_2 = \frac{\text{horsepower transmitted} \times 33{,}000}{\pi D R}$$

B = bending moment inch-lb.

T = torsional moment inch-lb.

J, J_1 = dead weight of parts.

The *total pull* on the driving pulley when belts or ropes are used is the sum of the tensions on the tight and slack side of the belt which, for convenience, may be safely assumed as equal to 3 H_1.

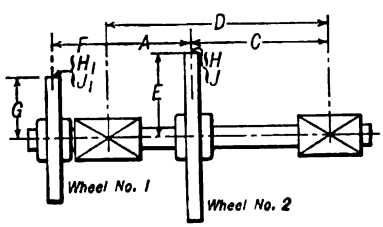

FIG. 28.

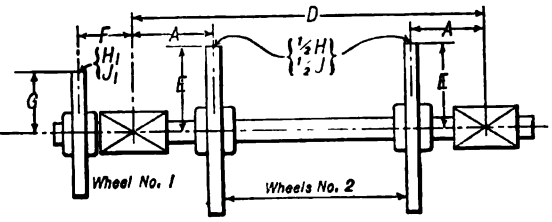

FIG. 29.

NOTE—Use the larger shaft size obtained from wheel 1 or 2.

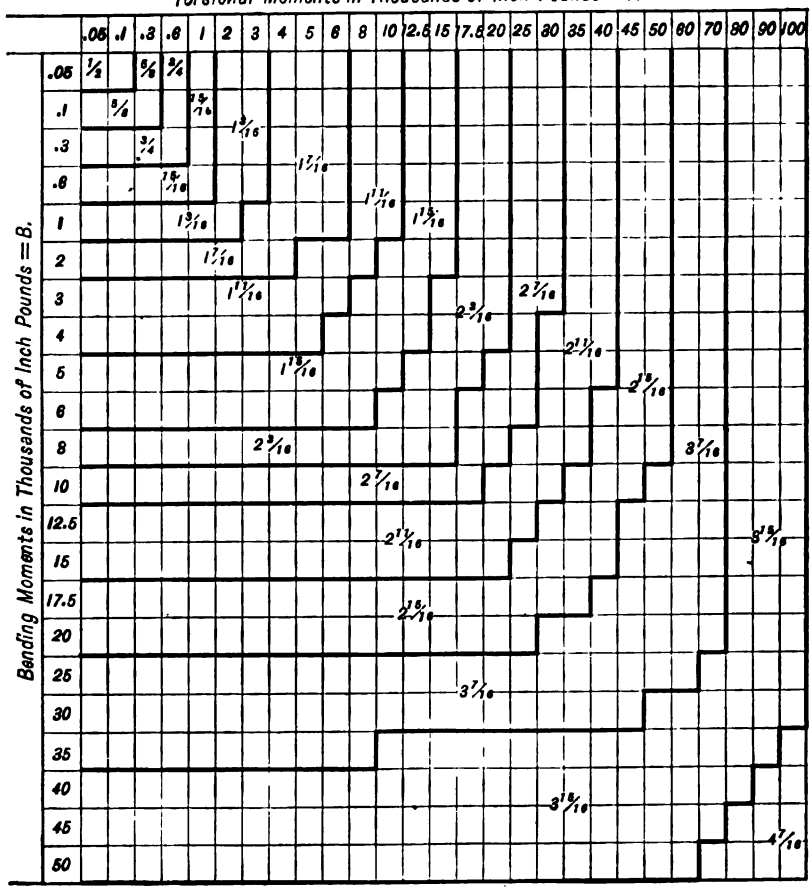

FIG. 30. DIAMETERS OF SHAFTS.

The numerical values of B and T may be readily calculated by making use of the following data:

	Fig. 28				Fig. 29			
	Moment B		Moment T		Moment B		Moment T	
	Chains and Gears	Belts and Ropes	Chains and Gears	Belts and Ropes	Chains and Gears	Belts and Ropes	Chains and Gears	Belts and Ropes
Wheel No. 1	$(H_1+J_1)\times F$	$(3H_1+J_1)\times F$	$H\times G$	$H_1\times G$	$(H_1+J_1)\times F$	$(3H_1+J_1)\times F$	$H_1\times G$	$H_1\times G$
Wheel No. 2	$(H+J)\times A\times C+D$	$(3H+J)\times A\times C+D$	$H\times E$	$H\times E$	$(\frac{1}{2}H+\frac{1}{2}J)\times A$	$(\frac{3}{2}H+\frac{1}{2}J)\times A$	$H\times E$	$H\times E$

It is recommended, where the service is unsteady or subject to shocks, to add 50 to 100 per cent to the moment values B and T.

The equivalent twisting moment is $T_e = B + \sqrt{B^2 + T^2}$. The torsional resisting moment for a round shaft $= f\,\frac{d^3}{5.1}$ in which d is the diameter of the shaft in inches and f = safe stress in lb. per sq. in.

f = 11,350 lb. sq. in. when $\frac{B}{T} = \frac{1}{4}$ or less.

f = 8750 lb. sq. in. when $\frac{B}{T} = 2$ or more.

The diameter of shaft required may be read direct from the diagram Fig. 30.

Line Shafting. It is customary to calculate the size of shaft at the location of the main drive pulley and make use of tables similar to Table 15 in proportioning the remaining sections.

TABLE 15

HORSEPOWERS OF SHAFTING UNDER DIFFERENT CONDITIONS

Diameter of Shaft Inches	For Head Shafts, Heavy Strains, Shafts with Gears, etc. Hp. $= \frac{D^3R}{125}$ Revolutions per Minute								For Line Shafts, with Bearings Every 8 Ft. Hp. $= \frac{D^3R}{75}$ Revolutions per Minute								For Simple Transmission of Power with No Bending Strains. Hp. $= \frac{D^3R}{50}$ Revolutions per Minute							
	50	100	150	200	250	300	400	500	50	100	150	200	250	300	400	500	50	100	150	200	250	300	400	500
1 3/16	0	6	1.3	1.8	2	6	3.3	4	5	6	1	2	3	4	6	7	9	11	2	3	5	7	8	10	13	17
1 7/16	1	2	2	3	4	5	6	7	9	12	2	4	6	8	10	12	16	20	3	6	9	12	15	18	24	30
1 11/16	2	3	6	8	10	11	15	19	3	6	10	13	16	19	26	32	5	10	14	19	24	29	38	48
1 15/16	3	6	9	12	15	17	23	29	5	10	15	19	24	29	39	48	7	15	22	29	36	44	58	73
2 3/16	4	8	13	17	21	25	33	42	7	14	21	28	35	42	56	70	10	21	31	42	52	63	84	105
2 7/16	6	12	17	23	29	34	46	58	10	19	29	39	48	58	77	97	14	29	43	58	72	87	116	145
2 11/16	8	15	23	31	39	46	62	78	13	26	39	52	65	78	104	129	19	39	58	78	97	117	156	194
2 15/16	10	20	30	40	50	61	81	100	17	34	51	68	85	101	135	169	25	51	76	101	127	152	203	254
3 3/16	16	32	48	65	81	97	130	162	27	54	81	108	135	163	217	271	41	81	122	163	203	244	32	406
3 15/16	24	49	73	98	122	146	195	244	41	81	122	163	204	244	326	407	61	122	183	244	305	366	488	610
4 7/16	35	70	105	140	175	210	280	.	58	117	175	233	291	350	466	.	87	175	262	350	437	524	699	.
4 15/16	48	96	144	192	240	290	385	.	80	161	241	321	401	481	642	.	120	241	361	482	602	723	963	.
5 7/16	66	133	200	265	332	400	.	.	111	222	333	444	556	666	.	.	166	333	499	666	832	998	.	.
6	86	173	260	345	432	520	.	.	144	288	432	576	720	.	.	.	216	432	648	864	1080	1296	.	.
6 1/2	110	220	330	440	550	.	.	.	183	366	549	732	915	.	.	.	275	549	824	1099	1373	.	.	.
7	137	275	412	550	686	.	.	.	229	457	686	915	1143	.	.	.	343	686	1029	1372	1715	.	.	.
7 1/2	170	337	506	675	.	.	.	.	281	563	844	1125	.	.	.	.	422	844	1266	1688	.	.	.	.
8	205	410	614	820	.	.	.	.	341	683	1024	1365	.	.	.	.	512	1024	1536	2048	.	.	.	.

The length of standard bearings for shafting is ordinarily 5 to 6 diameters.

Gears. Pinions requiring less than 12 to 15 teeth are to be avoided, as the teeth are weak, due to undercutting. The profiles of gear teeth as ordinarily constructed are involute curves.

The pitch of gear teeth is stated in either of two ways, viz., *Diametral Pitch* is the number of teeth per inch of pitch line diameter of the gear. *Circular* or *Arc Pitch* is the distance between the center lines of adjacent teeth measured on the pitch line of the gear.

The following proportions of cut gear teeth are recommended (Fig. 31 and Table 16):

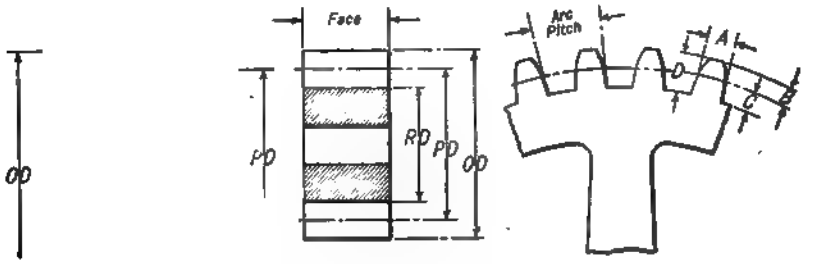

FIG. 31. PROPORTIONS OF GEAR TEETH.
(See Table 16.)

TABLE 16

Diametral Pitch	A	B	C	D	Arc Pitch	Standard Face
4	0.393″	0.25″	0.289″	0.539″	0.7854″	2½″
3	.523″	.33″	.389″	.719″	1.0472″	3½″
2½	.628″	.40″	.463″	.863″	1.257″	4″
2	.785″	.50″	.578″	1.078″	1.571″	4½″
1½	1.047″	.67″	.768″	1.438″	2.094″	6″

P = Pitch (Diametral). OD = Outside Diameter.
PD = Pitch Diameter. N = Number of Teeth.

$$P = \frac{N+2}{OD}$$

$$PD = \frac{N}{P}$$

$$OD = \frac{N+2}{P}$$

Strength of Gear Teeth. The following method may be employed in calculating the strength of gear teeth (Fig. 32).

Let P = safe static load in pounds on one tooth acting at pitch line of gear.
T = thickness of tooth at line of weakness, in.
L = moment arm normal to P, in.
F = face of gear, in.

Bending moment $M = PL$ in lb.

I = moment of inertia at line of weakness.

S = section modulus.

y = distance from neutral axis to outside fiber $= \frac{T}{2}$.

$$I = \frac{FT^3}{12}. \qquad S = \frac{I}{y} = \frac{FT^2}{6}.$$

f = safe fiber stress lb. per sq. in.

Resisting moment of tooth $= f\frac{FT^2}{6}$ in. lb.

Then $PL = f\frac{FT^2}{6}$, $P = f\frac{FT^2}{6L}$, $F = \frac{6PL}{fT^2}$.

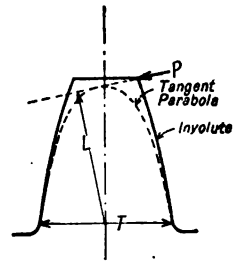

FIG. 32.

The values of L and T were determined by the *Westinghouse Electric and Manufacturing Co.* by actual measurement of a series of tooth outlines and used in calculating the values of P in the following table:

TABLE 17

VALUES OF P FOR 15° INVOLUTE TEETH OF 1" FACE, WHICH PRODUCE FIBER STRESS OF 1000 LB. PER INCH

Number Teeth in Gear	Circular Pitch																Multiplier for	
	3.1416	2.52	2.1	1.8	1.57	1.4	1.25	1.14	1.05	0.98	0.89	0.84	0.79	0.7	0.63	0.57	0.52	
	Diametral Pitch																20° Involute	Radial Flank
	1	1¼	1½	1¾	2	2¼	2½	2¾	3	3¼	3½	3¾	4	4½	5	5½	6	
12	210	168	140	120	105	95	84	76	70	65	60	56	52	47	42	38	35	1.16 .775
13	220	176	147	126	110	98	88	80	73	68	63	59	55	49	44	40	37	1.18 .756
14	226	180	151	129	113	100	90	82	75	69	65	60	56	50	45	41	38	1.22 .750
15	236	189	157	135	118	105	94	86	79	73	67	63	59	52	47	43	39	1.22 .734
16	242	194	161	138	121	107	97	88	81	74	69	64	60	54	48	44	40	1.22 .728
17	251	200	167	143	125	112	100	91	84	77	72	67	63	56	50	46	42	1.20 .712
18	261	208	174	149	130	116	104	95	87	80	75	70	65	58	52	47	43	1.18 .700
19	273	218	182	156	136	121	109	100	91	84	78	73	68	61	54	50	45	1.15 .678
20	283	227	189	162	142	126	113	103	94	87	81	75	71	63	57	51	47	1.14 .667
21	289	232	193	165	144	128	116	105	96	89	83	77	72	64	58	52	48	1.13 .663
23	295	236	197	169	147	131	118	107	98	91	84	79	74	65	59	53	49	1.12 .659
25	305	245	203	174	152	136	122	111	102	94	87	81	76	68	61	55	51	1.11 .649
27	314	250	210	180	157	140	126	114	104	97	90	84	78	70	63	57	52	1.11 .640
30	320	256	213	183	160	142	128	116	106	99	91	85	80	71	64	58	53	1.12 .637
34	327	262	218	188	164	146	131	119	109	101	94	88	82	73	66	59	54	1.14 .634
38	336	269	224	192	168	149	134	122	112	106	96	90	84	75	67	61	56	1.14 .626
43	346	277	230	198	173	154	138	126	115	106	99	92	86	77	69	63	57	1.15 .619
50	352	282	235	200	176	156	140	128	117	108	100	94	88	78	70	64	58	1.16 .615
60	358	286	238	204	179	159	143	130	119	110	102	95	89	80	71	65	59	1.18 .613
75	364	292	243	208	182	162	146	132	121	112	104	97	91	81	73	66	61	1.19 .612
100	371	297	247	212	185	164	148	135	124	114	106	99	93	82	74	67	62	1.20 .610
150	377	302	251	215	188	167	151	137	126	116	108	100	94	84	75	68	63	1.22 .608
300	380	308	256	219	192	171	154	140	128	118	110	102	96	85	77	70	64	1.23 .607
Rack	390	312	260	223	195	173	156	142	130	120	112	104	97	87	78	71	65	1.24 .605

Fiber Stresses — Material	Average of Tests Made by *W. E. & Mfg. Co.*		*Safe Fiber Stress Lb. per Inch
	Ultimate	Elastic Limit	
Cast Iron	22000	.....	8000
Cast Steel	60000	28000	20000
Forged Steel	65000	31000	25000

* The safe fiber stresses given here are for static loads acting at point of one tooth.

The safe fiber stresses f, given above, are for static loads and should be reduced by applying the following coefficients which vary with the pitch line speed.

Ordinary cut gears begin to be objectionably noisy at a pitch line speed of about 1200 ft. per min., and 2000 ft. per min. is about the practical limit.

TABLE 18

SPEED COEFFICIENTS

Pitch Line Speed, Feet per Minute	Coefficient	Pitch Line Speed, Feet per Minute	Coefficient
100	0.90	1100	0.34
200	.80	1200	.32
300	.70	1300	.30
400	.65	1400	.28
500	.57	1500	.27
600	.51	1600	.26
700	.47	1700	.25
800	.42	1800	.24
900	.40	1900	.22
1000	.36	2000	.21

Example. Given a cast-iron spur gear, 60 teeth, 3 diametral pitch, 4″ face running at a pitch line speed of 700 ft. per min.

(1) Determine safe working load P.

(2) Horsepower gear will transmit.

Solution: From Table 17 for values of P under 3 diametral pitch for 60 teeth read 119. From Table 18 the speed coefficient for 700 ft. per min. read 0.47. The safe fiber stress f, static loading, for cast iron is 8000 lb. per sq. in.

(1) $P = 119 \times 4 \times 0.47 \times 8 = 1790$ lb.

(2) $\text{Hp.} = \dfrac{1790 \times 700}{33{,}000} = 38.$

Example. Required the size of motor, belt, pitch, face and diameter of gears and size of head shaft for the two-strand bucket elevator (Fig. 33). Capacity of elevator 23 tons coal per hour lift 50 ft. Assumed over-all efficiency of elevator gearing and belt drive 50 per cent. Speed of elevator 120 ft. per min.

Solution: Hp. of motor $= \dfrac{23 \times 2000 \times 50}{0.50 \times 60 \times 33{,}000} = 2.4$, say 3. The weight of coal in the loaded buckets is: $\dfrac{23 \times 2000 \times 50}{60 \times 120} = 320$ lb.

If a spacing of 16 in. is assumed for the buckets, the capacity of each bucket figured ¾ full from diagram Fig. 11 is approximately 290 cu. in. or a 14″ x 7″ bucket.

The total weight of chain and buckets for both strands may be assumed, for approximate calculations, as 4 times the weight of coal in the loaded buckets or $4 \times 320 = 1280$ lb. This gives a total weight on sprockets of $1280 + 320 = 1600$ lb.

To allow for shock of loading add 100 per cent, which gives a total load $J = 3200$ lb. to be taken care of in bending by the head shaft. The unbalanced load at pitch line of sprockets producing the torsional moment $H = 320 + 100\%$ (for shock) $= 640$ lb.

Bending moment $B = \dfrac{1600}{2} \times 8 = 6{,}400$ in. lb.

Torsional moment $T = 640 \times 16 = 10{,}240$ in. lb.

From diagram Fig. 30 diameter of head shaft required is: $2\frac{3}{16}$ in.

The load at pitch line of the 42″ gear is: $P = 640 \times \frac{3}{12} = 490$ lb. The pitch line speed is: $\dfrac{14.2 \times 42 \times 3.14}{12} = 156$ ft. per min.

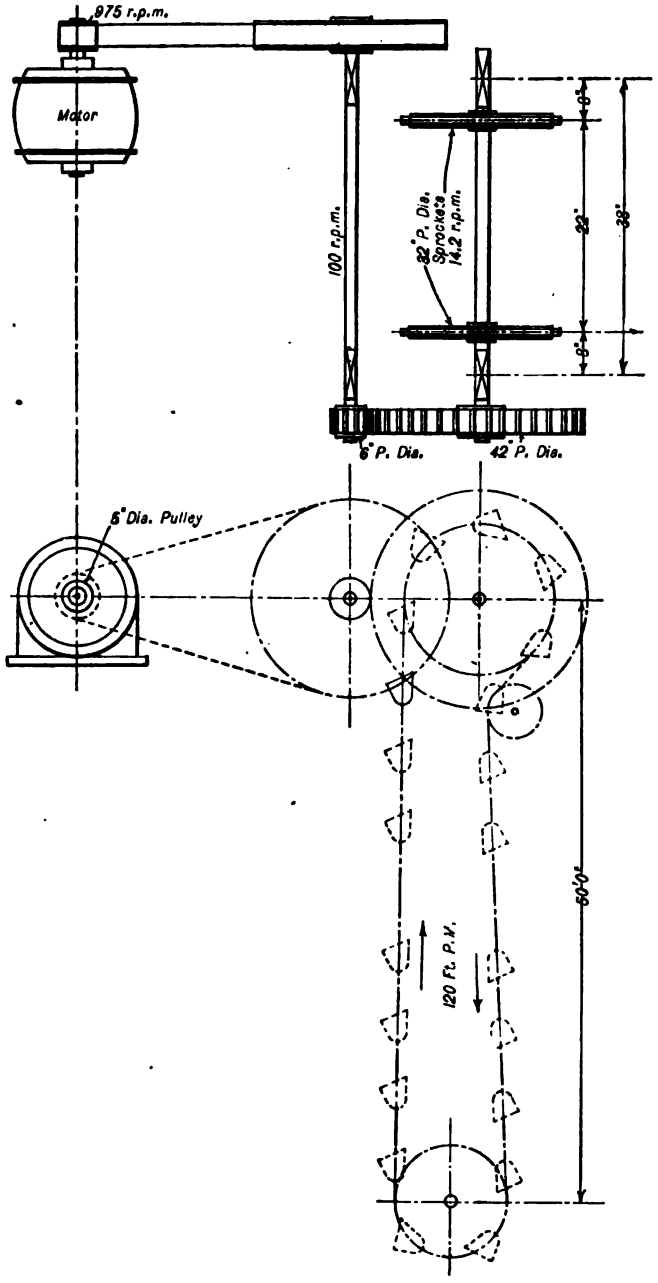
975 r.p.m.
Motor
100 r.p.m.
22" P. Dia. Sprockets 14.2 r.p.m.
6"
22"
38"
6"
6" P. Dia.
42" P. Dia.
6" Dia. Pulley
120 Ft. P.M.
60'-0"

Fig. 33.

Assuming a diametral pitch of 4, and a 6″ diam. pinion, the number of teeth is 24. $P = 75$ lb. from Table 17. The speed coefficient from Table 18 is 0.85. The width of gear face required is: $F = \frac{490}{75 \times 0.85 \times 8} = 0.96''$. The standard face from Table 16 is 2½″ and will therefore be used.

Referring to Table 12, it will be seen that the horsepower transmitted by a "single" leather belt 4″ wide, running over a 6″ diam. pulley at 100 r.p.m., is 0.57 hp. for 180 deg. arc of contact. Assuming an arc of contact of 120 deg., the power transmitted is $0.57 \times 0.76 = 0.43$. The motor speed is 975 r.p.m. The power which the belt will safely transmit at this speed is $9.75 \times 0.43 = 4.2$ hp., which is ample.

CHAPTER XIX

ISOLATED POWER-PLANT DATA

Definitions. The following are definitions of terms frequently used in power-plant practice.

Station Load Factor is the ratio of the actual power developed in kw.-hours per day or year to the power that could be developed if all of the generating units were operated at their normal rated capacity for the same period of time. It is evident that the higher this factor is the lower will be the cost of the current, as the fixed charges are distributed over a greater output.

Load Factor is the ratio of the average power to the maximum power required over a certain period. The load factor of a plant is found by dividing the area under the load curve by its length to obtain the mean ordinates or average load, and dividing this by the maximum peak load occurring during this period.

Demand Factor is the ratio of the maximum power demand of any system or part of a system to the total connected load of the system or part of the system.

The following tables are useful in estimating the probable load that is to be taken care of by a plant after the connected load is known or assumed.

TABLE 1

DEMAND FACTORS FOR LIGHTING CUSTOMERS

Compiled by the *Railroad Commission of Wisconsin*

Class of Service	Demand Factor	Class of Service	Demand Factor
Amusements	56%	Laundries	67%
Barns	67	Manufacturers	54
Buildings, Public	34	Offices	64
Churches	56	Printers and Publishers	60
Flats	54	Residences	43
Foundries and Rolling Mills	55	Shops, Bicycle and Electrical	62
Garages	60	Shops, Machine	37
Hospital	42	Stores, Retail	62
Hotels, Large	28	Theaters	49
Hotels, Small and Lodging Houses	67	Wholesale Houses	47

TABLE 2

DEMAND FACTORS FOR MOTOR CUSTOMERS

Compiled by the *Railroad Commission of Wisconsin*

Class of Service	Demand Factor	Hours' Use per Day	Class of Service	Demand Factor	Hours' Use per Day
Breweries	60%	10.8	Manufacturing, Brass	50%	6.7
Boiler Shops	45	4.3	Manufacturing, Cans	70	7.2
Department Stores	55	7.2	Manufacturing, Clothing	55	3.6
Foundries	75	3.6	Manufacturing, Electrical	55	5.5
Forge Shops	49	7.2	Manufacturing, Furniture	65	6.7
Grain Elevators	75	2.4	Manufacturing, Screws	75	7.2
Hotels, Large	40	12.0	Manufacturing, Sheet Metal	70	4.3
Hotels, Small	50	8.4	Refrigerating Plants	90	12.0
Laundries	70	6.0	Theaters	60	3.8
Machine Shops	55	6.2	Textile Mills	65	4.8
Newspapers	75	4.8			

TABLE 3

DEMAND FACTORS

Compiled by the *Commonwealth Edison Co* of Chicago

Lighting Customers		Motor Customers	
Bill-boards	85.5%	Offices	65.1%
Department Stores	85.5	Public Gathering Places	28.7
Offices	72.4	Hotels	28.7
Residences and Barns	60.	Residences	69.3
Retail Stores	66.3	Retail Stores	58.2
Wholesale Stores	70.1	Wholesale Stores	59.4

TABLE 4

RATIO OF AVERAGE LOAD TO CONNECTED LOAD

Compiled from various sources

Motor Customers		Lighting Customers	
Boiler Shops	25 to 30%	Residences	
Breweries	30 to 35	Small	20%
Cement Mills	30 to 35	Large	50
Flour Mills	45 to 50	Office Buildings	90
Machine Shops	30 to 40	Stores	95
Marble Shops	45 to 51	Theaters	95–100
Rubber Works	20 to 30		
Sheet Metal Manufacturing	25 to 30		
Textile Manufacturing	75 to 90		
Tanneries	50 to 60		
Wood Working Shops	10 to 35		
Wagon Manufacturing	30 to 40		
Soap Manufacturing	25 to 30		

TABLE 5

SMALL CENTRAL STATION STATISTICS

Compiled from Stations in the State of Iowa, 1909

Population, Thousands	Station Kw.	Capacity Watts per Capita	Connected Load per Kw. Station Capacity				Yearly Load Factor
			Lamps	Motors	Heat, Etc.	Total Connected	
1 to 2	67	42	1.3	0.006	0.03	1.3	0.36
2 to 3	122	44	1.7	.200	.20	2.1	.29
5.67	260	51	1.4	.500	.15	2.0	.20
5.5	775	50	1.0	.500	.10	1.5	.22
53.	2,120	46	1.4	.900	.10	2.4	.24

Economic Principles of Power-Plant Design. The economic principle underlying the design of any power plant is the requirement that the plant shall produce a given amount of power for a term of years for the least total cost per unit of power delivered.

The choice as to the type of power that may best be employed depends upon a number of items, each of which has a direct bearing upon the ultimate cost of power developed.

Location of the plant with reference to water-supply, costs of different fuels available, the opportunity to use exhaust steam for heating and process work, etc., are factors which frequently determine whether the plant is to be operated by steam engines or turbines, gas or oil engines.

TABLE 6

COMPARATIVE ANALYSIS OF MECHANICAL AND ELECTRICAL POWER DISTRIBUTION AND LOSSES

Mechanical Transmission			*Electrical Transmission*		
At engine shaft		100	At engine shaft		100
Efficiency of main belt	0.97		Combined mechanical and electrical efficiency of dynamo	0.90	
Loss at main belt	0.03		Loss at dynamo	0.10	
Delivered at line shaft		97	Delivered on switchboard		90
Efficiency of line shafts	0.85		Efficiency of electrical mains	0.98	
Friction of line shaft	0.15		Resistance of mains	0.02	
Delivered at countershafts		82.5	Delivered at motors		88.2
Efficiency of other shafting and belting	0.88		Efficiency of motors	0.88	
Friction of other shafting and belting	0.12		Mechanical and electrical loss in motors	0.12	
Delivered at machines		72.6	Delivered at machines or short countershafts		77.6
			Efficiency of countershafts and belting on groups of machines	0.92	
			Friction on countershafts and belting on groups of machines	0.08	
			Delivered at machines		71.4
Energy delivered at machines 72.6 per cent × 4.16 per cent = 3.02 per cent of the heat in the coal.			Energy delivered at machines 71.4 per cent × 4.16 per cent = 2.97 per cent of the heat in the coal.		

The cost of power production involves the following items:

1. Interest on the capital invested.
2. Taxes and insurance.
3. Depreciation on equipment and buildings.
4. Maintenance and repairs.
5. Cost of fuel, water, oil, and other supplies.
6. Cost of labor.
7. Cost of management.

In making preliminary comparisons the first three items (1, 2, and 3) termed "fixed charges" may be estimated as follows:

Interest charge may be assumed as 5 per cent, taxes and insurance 1½ per cent. The depreciation may be taken from the table following.

TABLE 7

DEPRECIATION OF ELECTRIC RAILWAYS AND CENTRAL STATIONS*

Percentage per Annum by Different Authorities

	Chicago Trac. Co.	Chicago Union Trac.Co	Milw'ke Elec. R. & L. Co.	Wisc. R.R. Co.	Ave. Eng. Prac.	Ave. Sect. Prac.	Philip Dawson	Stone-Webster	Indust. Power Plants	Prof. G. F. Gebhardt	Misc. Sources
Buildings	.....	2	3	2	2.5	2.5	1–2	2	1–2	2	2
Boilers	3.5–10	6.6	7.5	6.6–8.5	5	5	8–10	5	2.5–3.3	4–6.6	7.5
Steam Piping	3.5	6.6	7.5	5	5	5	8–10	5	2.5–3.3	5–8	5
Auxiliaries	5–10	6.6	5	6.6–8.5	5	5	8–10	5	4–6.6	3–5	7.5
Steam Engines	3–10	6.6	5	5–6.6	5	5	4–6	5	2.5–5	4–6.6	5
Steam Turbines	.....	.....	5	.....	5	5	7–9	5	2.5–5	4	4
Belted Generators	5–10	6.6	7.5	5	5	5	5–10	5	6.6	3.3–4	7.5
Dir. Con. "	5	6.6	7.5	5	5	5	4–8	5	4	3.3–4	5
Wires and Cables	2	6.6	5	2	5	3	3–5	5	4–6.6	5	5
Switchboards	2	6.6	5	2	7.5	5	8–10	5	2–5	.....	5
Rotary Convert	.....	6.6	5	5	5	5	8–10	5	4–5	4	5
Transformers	.....	6.6	5	5	5	5	5–6	5	3–5	4	5
Motors	5–10	6.6	5	5	5	5	5–8	5	4–6.6	5	5
Storage Batteries	.....	6.6	10	.....	5	5	9–11	5	5–10	6.6	10
Overhead System	.....	10–14	7.5	.....	....	3	4–8	10–14	5–10	.....	10
Cars	.....	5–8.5	6–7.5	5–6.6	10	7.5	4–6	5–8.5	.....	.....	7.5
Track Work	.....	7.75	7.5–12	5	5	8	7–13	7.2	.....	.....	7.5
Shop Equipm't.	3–10	5	7.5	3.3–10	7.5	7.5	12–15	5	4–10	.....	7.5
Supplies and Mis.	5	.....	5	.....	5	7.5	1.5–2	.....	5	.....	5

* From "Electrical Review & Western Electrician."

In the production of power in a steam plant the cost of fuel, using coal, varies from 25 to 30 per cent of the total cost. It does not follow, however, that the most economical generating units from the standpoint of fuel cost alone is necessarily the most desirable, as the increase in the fixed charges necessary for the more economical types of boilers, engines, and auxiliaries may more than offset the gain due to the lower fuel cost.

As the fixed charges remain the same no matter what the load carried by the plant may be, it follows that the greater the ratio of average load to peak load, termed the "plant load factor," the less the cost per unit of power (horsepower-hour or kilowatt-hour) delivered will be.

This is due to the fact that sufficient generating capacity must be installed to carry the peak load which may only exist during a comparatively short period during the day, the plant operating at much below the maximum demand for the remainder of the time.

The economy of various types of prime movers was given in the Chapters on "Steam Engines" and "Steam Turbines."

The approximate cost of prime movers, etc., will be found in the Chapter on "Cost of Steam- and Gas-Power Equipment," in this volume. Comparative examples are also given under this heading showing the method employed in making a comparison between the cost of production for various types of plants.

ISOLATED POWER-PLANT LOAD CURVES FOR TYPICAL PLANTS

Load Curves. The load curve of a power plant is a graphical representation of the plant output for a given period of time, the ordinates being usually given in amperes or kw. and the abscissæ in hours.

The daily load curves for two types of isolated plants are given by Figs. 1 and 2.

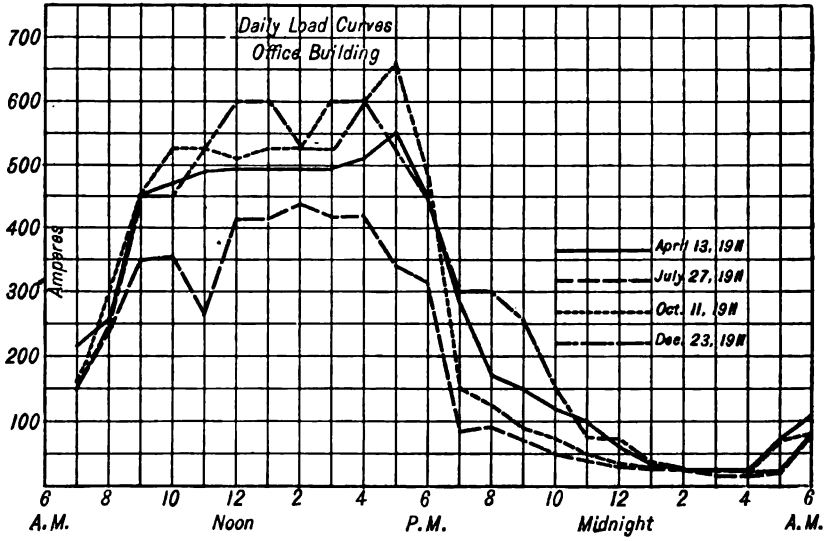

FIG. 1. OFFICE BUILDING LOAD CURVE.

These curves appeared in "The Isolated Plant," 1912. Fig. 1 shows the load curve for an office building power plant supplying light, heat, and power to two office buildings. One building is 150 ft. x 86 ft., 11 stories high; the other one 112 ft. x 50 ft., 12 stories high. The equipment consists of three water-tube boilers, three 3-wire generators of 60 kw. capacity direct connected to 12" x 12" piston valve engines, one 3-wire generator 80 kw. capacity direct

connected to a 15" x 13" piston valve engine, one 10-ton compression type refrigerating machine. A storage battery of 30 amperes capacity at 240 volts for 8 hours.

Fig. 2 shows the load curve for a modern high-class New York apartment house 160 ft. x 112 ft., 12 stories high. The plant supplies current for lighting, power for four elevators, steam for heating and laundry purposes and refrigeration direct to each apartment refrigerator. The

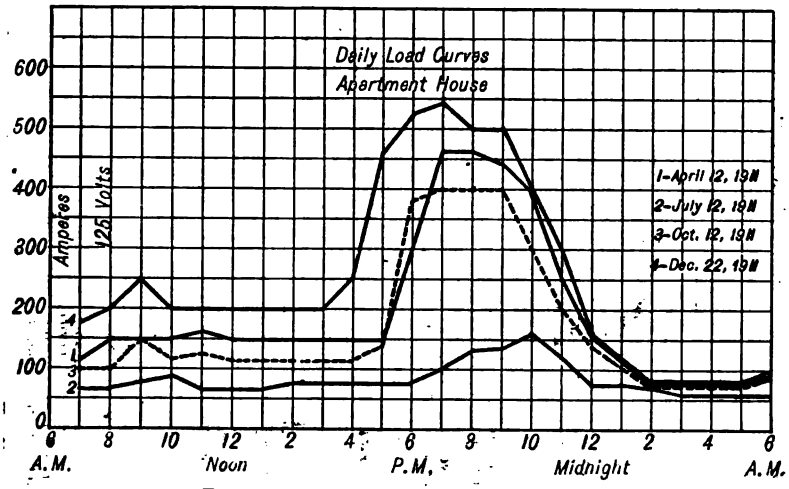

FIG. 2. APARTMENT HOUSE LOAD CURVE.

plant equipment consists of three 150-horsepower return tubular boilers; three 65-kw. generators direct connected to high-speed engines and one 12-ton compression type refrigerating machine. Additional load curves will be found in the Chapter on "Exhaust Steam Heating," Volume I.

An inspection of these curves serves to illustrate several points which have a direct bearing on the selection of the size of units best adapted to handle the load.

It is evident that the engines or turbines must be of sufficient size, when operated at approximately 50 per cent overload, to be able to carry the maximum peak load. If this peak exceeds one hour duration, then the machines should be of sufficient size to carry the peak when operating at about 25 per cent overload. See reference to overload capacity referred to in Chapter X. The number and size of the units to be installed in any individual case may be fairly accurately determined after a preliminary load curve has been constructed. The data for this estimate are obtained from an inspection of the plans of the building or buildings to be served with power and light and on which the "connected load" is supposed to be indicated. The term "connected load" as here used refers to the kw. required to operate the motors considered at their normal rating and the kw. of all the lights connected and may or may not be the actual load coming on the plant. The connected load in office buildings consists of the motors for elevator service, pumps for domestic water supply, sump pumps, ventilating fans, coal and ash elevators and conveyors, refrigerating machine for drinking water supply, and current for the illumination of the building. The pumps for the fire protection need not be considered in this connection.

The connected load of a modern hotel will have in addition to the items enumerated a refrigerating machine, which may or may not be electrical driven, for ice manufacturing and cold storage work, and small motors for miscellaneous purposes. There are ordinarily numerous ventilating fans which consume a considerable amount of current.

The connected load in the ordinary loft building, in which light manufacturing is carried on, is made up of the motors for the freight and passenger elevators, motors for driving the machinery

PRINCIPAL EQUIPMENT OF DIME SAVINGS BANK BUILDING PLANT, DETROIT, MICH.

No.	Equipment	Kind	Size	Use	Operating Conditions
4	Boilers	Stirling type S special	350 hp	Generate steam	150 lb. pressure, no superheat
4	Stokers	Taylor, three-retort		Boiler furnace	Mechanically operated
1	Traveling bucket	Monorail	900 lb	Coal from bunker to boiler	Motor-driven, Howe suspended scale
1	Fan	"Sirocco"	No. 8	Forced draft to stokers	Engine-driven, capacity 3,600 cu. ft. per min.
1	Fan	Steel plate	40 x 28-in	Forced draft to stokers	Motor-driven, capacity 3,600 cu. ft. per min.
1	Engine	Simple vertical	7 x 8-in	Drive forced draft fan	230-volt, 150 lb. pressure, 600 r.p.m.
1	Motor	Variable speed	60 hp	Drive forced draft fan	
2	Meters	Venturi	4 x 1-in. tube, 2 x ½-in. tube	Boiler feed and Holly loop	
1	Heater	Open	1,500 hp	Heat boiler feed	Exhaust or live steam
3	Heaters	Closed	Each 1,400 gal. per hr	Hot water	Exhaust or live steam
2	Pumps	Duplex	7½ x 5 x 10-in	Boiler feed	min.
2	Injectors	U. S	2-in	Boiler feed	
1	Pump	Triplex	5½ x 8-in	House pump	
1	Pump	Centrifugal, four-stage	2-in	House pump	
2	Motors	Direct current	15 hp. and 20 hp	Drive house pumps	
2	Pumps	Simplex	10 x 16 x 16-in	Vacuum heating system	ou ft. per min.
2	Pumps	Centrifugal	4-in	Sump	Motor-driven, 1,100 r.p.m.
1	Refrigerating system	Absorption	80 ton	Restaurant and drinking water	Exhaust steam
2	Pumps	Burnham simplex	6½ x 4 x 8-in	Drinking water	150 lb. pressure, 50 ft. per min.
2	Pumps	Burnham simplex	10 x 6½ x 12-in	Brine	150 lb. pressure, 50 ft. per min.
1	Pump	Burnham simplex	8 x 3½ x 12-in	Aqua	150 lb. pressure, 50 ft. per min.
1	Pump	Duplex	12 x 6½ x 12-in	Hydraulic money lift and passenger elevator	150 lb. pressure, 50 ft. per min.
2	Water filters	Double filters	8 x 8 ft	Purify house-service water	
5	Engines	Four-valve	17 x 27-in	Main units	150 lb. pressure, 150 r.p.m.
5	Generators	Direct-current	200-kw	Main units	115-230-volt, 150 r.p.m.
5	Lubricators	Force feed	2 feed	Lubricate engine cylinders	2 strokes per min.
2	Filters	Oil	50 gal	Filter spent oil	
9	Motors	Direct traction	Eight 25 hp., one 30 hp.	Elevators	230-volt, 63 r.p.m. max., car speed 550 ft. per min.
5	Fans	"Sirocco"	Nos. 6, 7, 8 and 9, one 42-in. Venturi	Fresh air	Motor-driven, 213 to 320 r.p.m.
5	Motors	Direct-current	Total 40 hp	Drive fresh air fans	220-volt, 213 to 320 r.p.m.
4	Exhausters	"Sirocco"	Nos. 4, 5 and 6	Exhaust air	Motor-driven
4	Motors	Direct-current	Total 22 hp	Drive exhaust fans	220-volt, 260 to 400 r.p.m.
2	Air washers	No. 1	No. 1		) r.p.m.
1	Vakuum cleaner	Rotary valve	4 sweepers		n.
1	Motor	Direct-current	15 hp		) r.p.m.
2	Air compressors	Vertical	6 x 4½ in		.m.
2	Motors	Direct-current	8 hp		
1	Water weigher	Balancing type	20,000 lb. per hr	Returns from heating system	

used in particular processes of manufacture carried on in the various stories and domestic water-supply pumps, and the power required for illumination.

The connected load of an industrial plant is made up principally of the motors required for operating the machines of the various departments, and in addition the motors required for the transportation of materials between departments, as for operating cranes, conveyors, elevators, blowers, etc. See example in Chapter X, on "Steam Engines."

Mechanical and Electrical Equipment for Office Buildings. The varied nature of the equipment required for a modern office building is well illustrated by the following description of the Dime Savings Bank Plant, Detroit, Mich., Fig. 3, which appeared in "Power," August, 1914.

This structure is 23 stories high, with two basements, and is built in the form of an "H"

FIG. 3. PLAN OF PIPING IN ENGINE AND BOILER ROOMS.

on a plot measuring 130 x 150 ft. The first floor is given over to the bank and a number of stores and those above to 858 office suites, housing about 3,000 people. The building is equipped with the latest services, and has its own plant to furnish current for lighting, power, and elevators, steam for heating, hot water for house use, refrigeration and vacuum cleaning. The Ford Building, another property under the same ownership, will also be served by the new plant. The two buildings are connected by a 7 x 7-ft. tunnel 500 ft. long.

Services Rendered by Plant. The Dime Savings Bank Building is equipped with 3,400 sixty-watt lights, which total 204 kw. when all are in use. The power load consists of 29 motors for general use ranging from 3 to 60 hp., and nine elevator motors, eight of 25- and one of 30-hp. capacity. These high-speed, direct-traction motors take current at 220 volts. The car speed is 550 ft. per min. and the direct travel 268 ft. In February, the electrical load averaged close to 2,200 kw.-hr. per day of 24 hr., which would call for a uniform generator capacity of less than 100 kw. The night and Sunday loads, however, are light, and during week days, when the elevators frequently impose heavy peaks, it is necessary to keep two 200-kw. units in operation, although for the greater part of the time one machine could handle the load.

The electrical load as given refers to the Dime Savings Bank only, as the Ford building load had not been connected, which accounts for the apparent discrepancy between the load and size of plant installed.

For heating the building there are 47,000 sq. ft. of direct radiation and 16,000 of indirect, serving the bank and a restaurant in the first basement. As much as possible of this is made up by the exhaust from the main units and the steam-driven auxiliaries. The balance is live steam

supplied direct from the boilers through a reducing valve. Besides, live steam is supplied to the restaurant at 30-lb. and some at 6-lb. pressure to a 30-ton absorption plant to supplement the exhaust from the brine, aqua, and drinking-water pumps.

In the Ford Building, which is 19 stories high and in plan measures 138 x 110 ft., there is a total connected motor load of 426 hp. besides the lighting. For an average the year around

TABLE 8

SMALL MOTOR EQUIPMENT OF McALPIN HOTEL, NEW YORK CITY

Number of Motors	Machines	Motor, Hp.
Main laundry:		
10	42-in. by 64-in. washers	2
1	Panel control	1/8
5	32-in. extractors	4
1	Steam-drying tumbler	5
1	Two-section cabinet dry room	1
1	Five-roll flat-work ironer	3
2	Six-roll flat-work ironer	3
Guests' Laundry:		
2	37-in. by 54-in. washers	2
1	26-in. extractor	3
1	Shirt starcher	¼
1	14-in. starcher	½
1	Cabinet dry room	1
1	Conveyor dry room	2
1	36-in. body ironer	½
1	Bosom press	¼
1	Air pump	½
1	24-in. ironer	1
1	Shaping table	½
Helps' Laundry:		
1	Cabinet dry room	½
KITCHEN EQUIPMENT:		
Sub-basement:		
1	Ice crusher	1
1	Ice cuber	3
Helps' kitchen:		
2	Vegetable peelers	¾
1	Dish-washing machine	2
1	Meat chopper	2
Main kitchen:		
1	Coffee mill	1
1	Butter worker	1½
1	Horseradish grater	1
1	Dough mixer	2
1	Vienna ice-cream freezer	1½
1	Brine ice-cream freezer	2
1	Almond crusher	1½
3	Whipping machines	1
1	Meat chopper	2
2	Dish-washing machines	3
1	Silver buffer	2
1	Dust collector	½
1	Knife cleaner	½
Officers' kitchen, third floor:		
1	Dish washer	1
Twenty-third floor kitchen:		
1	Dish washer	2
Twenty-fourth floor:		
1	Dish washer	1
1	Knife cleaner	½

the load will closely approximate that of the new building. Most of the power is required by the six hydraulic plunger elevators, which have a travel of 212 ft.; during the day they are served by a 9 x 18-in. triplex pump driven by a 150-hp. motor. There are two other pumps, each 7½ x 12 in., of the same type, driven by 80-hp. motors, which are used singly for night service or in unison when the large pump is shut down. Besides, one of the smaller pumps is carried on the line continuously, but is set low so that it is not called into service unless something serious happens to the main unit. The pumps operate against an average pressure of 180 lb. and are set to cut out at

220 lb. There is also a triplex 5½ x 12-in. pump driven by a 25-hp. motor, which serves a four-ton freight lift. For ventilating and exhaust fans there are six motors totaling 50 hp. Two house pumps and the ice-water circulating pumps are each driven by 4-hp. motors, two circulating pumps on the air washers take 2 hp. each, the vacuum cleaner 15 hp.; for the sewage ejector there are duplicate sets of air compressors driven by 5-hp. motors.

The building has 38,000 sq. ft. of direct radiation served by a Paul system, which is now supplied with steam at 5-lb. pressure by the *Murphy Power Co.* To maintain the hot-water service, steam is required all the year around.

In the Dime Savings Bank Building the engine room is in the sub-basement, 32 ft. below the street level, the pump and fan rooms are in the first basement and the boiler room occupies a part of both. There are a total capacity of 1400 hp. in boilers, 1000 kw. in five generating units (a ratio of 1.4 to 1, respectively), and a refrigerating capacity of 30 tons. About half of the auxiliaries are steam driven and the balance is operated by motors. The electrical service is three-wire, direct-current.

Mechanical and Electrical Equipment for Hotels. In addition to the kind of equipment already mentioned for an office building the equipment for a hotel usually includes a freezing tank, cold-storage rooms, and small motors used for a variety of service as indicated by Table 8.

There are two 15 horsepower motors operating brine pumps. The plant equipment includes two 65-ton ammonia-compression refrigerating machines, and one 15-ton freezing tank.

TABLE 9

HOTEL DATA

Compiled from various sources

Name of Hotel	Number of Guest Chambers	Floor Area		Boilers		Electric Generator. Rated Capacity Kw.	Tons of Refrigeration	Ice-Making Capacity, Tons	Per Guest Chamber		
		Typical Floor, Sq. Ft.	Total, Sq. Ft.	Steam Pressure, Lb. Sq. In. Gage	Horsepower				Elec. Gen. Rated Cap'y, Kw.	No. of 16 C. P. Lamps	Tons of Refrig.
Bellevue Stratford	800	25,000	58,000	...	1,500	1,000	100	10	1.25	16.2	0.126
Belmont	636	.....	.....	125	....	1,200	75	6	1.85	16.8	.122
Plaza	800	25,700	50,000	135	....	1,100	150	15	1.37	21.2	.187
Astor	500	.....	.....	150	....	1,000	120	10	2.00	26.0	.240
La Salle	1,172	.....	.....	160	....	1,100	90	....	1.06	18.7	.077
Knickerbocker	573	16,300	267,000	...	....	900	83	....	1.57	.....	....
Rector	242	.....	.....	...	....	....	....	....	....	....	....
Lafayette	270	.....	.....	...	....	225	20	2	0.835	9.25	.073
Denechand	223	.....	.....	...	....	300	10	4½	1.34	.....	.045

Steam Required for Cooking and Warming Apparatus. The amount of steam required for cooking and warming apparatus used in hotels and restaurants may be approximated from the data given by Tables 10 and 11_b taken from a report of the *National Electric Light Association.*

ESTIMATING POWER REQUIREMENTS

In estimating the power requirements for various types of buildings and industrial plants an estimate of the character and amount of the various connected loads must be made in advance as well as the proportionate amount of the various connected loads that are likely to come on the plant, as well as the time and period over which they act. Owing to the varied nature of the machinery to be served with power, this estimate is often only a comparatively rough approximation.

TABLE 10

TABLE SHOWING THE USE OF STEAM BY RESTAURANTS IN NEW YORK CITY

Character of Restaurant	Cooking or Warming Apparatus	Dimensions or Capacity	Pounds of Steam Used Per Day	Approximate Number of Persons Fed Per Day	Approximate Number of Lb. Steam per Day per Person Fed
Buffet lunch room in downtown office building	2 Kettles	12 in. dia., 6 in. deep	3,978	600	6.6
Club restaurant in downtown office building	2 Stock pots 3 Kettles 2 Urns 1 Urn 1 Bain-marie 1 Bain-marie 1 Dish washer 4 Plate warmers	22 in. by 22 in. 20 in. by 28 in. by 14 in. 22 in. dia., 30 in. deep. 22 in. dia., 38 in. deep 22 in. by 57 in. 30 in. by 60 in. 2 Basins 57 in. by 22 in. by 22 in.	7,633	500–600	14
Club restaurant in downtown office building	1 Soup kettle 1 Kettle 2 Bain-maries 2 Steam tables 2 Dish washers 1 Plate warmer 2 Coffee urns 2 Tea urns 1 Steam table 3 Coffee urns	60 gal. 18 in. dia. 30 in. by 24 in. by 12 in. 36 in. by 36 in. by 8 in. 18 in. dia. 24 in. by 60 in. by 72 in. 7 and 5 gal. 1 gal. each 24 in. by 96 in. by 5 in. 5 gal. each	8,124	800	10
Restaurant in large club-house	1 Iron kettle 1 Kettle 1 Kettle 1 Kettle 2 Dish washers 12 Plate warmers 1 Egg boiler 4 Veg. steamers 1 Steam table 3 Coffee urns	50 gal. 50 gal. 40 gal. 15 gal. 4 Basins 3 compartments 6 in. by 24 in. by 12 in. 20 ft. by 3 ft. 12 gal each	5,880	500–600	10
Restaurant in apartment hotel	1 Plate warmer	60 in. by 36 in. by 24 in.	1,000	330	3
High-class restaurant in downtown office building	1 Kettle 1 Stock pot 2 Boilers 1 Steamer 1 Plate warmer 2 Hot-water urns 1 Steam table 3 Coffee urns	42 in. by 24 in. deep 24 in. by 24 in. 24 in. by 20 in. deep 18 in. by 24 in. by 18 in. 24 in. by 48 in. by 36 in. 17 gal. 180 in. by 48 in. 8 gal.	11,900	800–900	14
High-class restaurant in downtown office building	1 5 T. refrig. mach. 1 Hot-water heater 1 Steam table 1 Kettle 1 Boiler 1 Dish washer	60 in. by 60 in. 72 in. by 30 in. 10 in. dia. 24 in. by 18 in. by 24 in.	2,600,000 per year		

All results for restaurants in New York City are based on periods of tests of one day, except the second, which was five days, and the last, which was one year.

TABLE 11

TABLE SHOWING THE USE OF STEAM BY RESTAURANTS IN CHICAGO, ILL.

Based on Monthly Meter Readings

Character of Restaurant	Cooking or Warming Apparatus	Dimensions or Capacity	Pounds of Steam Used Per Day	Approximate Number of Persons Fed Per Day	Approximate Number of Lb. Steam per Day per Person Fed
Cafeteria or lunch club	3 Urns 1 Bain-marie 1 Veg. steamer 1 Plate warmer 1 Hot-water heater	10 gal. 24 in. by 24 ft. 16 in. by 24 in. by 12 in. 24 in. by 60 in.	3,300	800–1,000	3.66
Dairy lunch	3 Urns Bain-maries 1 Dish washer 1 Hot-water heater	10 gal 18 in. by 84 in. Open jets	3,660	1,000	3.66
Cafeteria or lunch club	4 Urns 2 Bain-maries 2 Plate warmers 1 Roll warmer 1 Hot-water heater 2 Dish washers 2 Bread warmers	10 gal. 24 in. by 20 ft. 24 in. by 36 in. by 36 in. 36 in. by 48 in. by 72 in. 24 in. by 48 in. Open jets.	5,550	1,200–1,400	5.27
Counter lunch room	6 Urns 1 Bain-marie 1 jacketed kettle 2 Urns 1 Bean warmer 1 Hot-water heater	15 gal. 24 in. by 60 in. 5 gal. 4 gal. 12 in. by 12 in. by 16 in. 24 in. by 72 in.	3,300	2,000	1.65
High-class Chinese-American restaurant	2 Urns 1 Bain-marie 1 Bain-marie 2 Plate warmers 1 Hot-water heater	10 gal. 24 in. by 9 ft. 24 in. by 7 ft. 12 in. by 48 in. by 8 ft.	3,500	500	7.0
Highest-class restaurant	2 Steam tables 1 Bain-marie 1 Plate warmer 3 Plate warmers 1 Cup warmer 3 Urns 1 Jacketed kettle 3 Veg. steamers 1 Veg. cooker 4 Open jets in sinks 6 Oyster pots 1 Egg boiler 1 Lobster steamer 2 Grease kettles 1 Dish washer 1 Milk tester 1 Hot-water heater	36 in. by 48 in. 24 in. by 48 in. by 72 in. 12 in. by 36 in. by 21 ft. 72 in. by 36 in. by 18 in. 18 in. by 48 in. by 48 in. 12 gal. 36 in. dia. 24 in. by 36 in. by 12 in. 24 in. by 36 in. by 48 in. 5 in. dia. 12 in. dia. 36 in. dia. 36 in. by 72 in.	20,000	1,000	20.0

Methods for estimating the size and power requirements for pumps, ventilating fans, refrigeration, elevators, and electric illumination will be found under their appropriate headings elsewhere in the text.

Estimating Electric Power Requirements for Office Buildings. The maximum loads to be taken care of by the plant may be conveniently separated into lighting and power as indicated by the following diagram:

Day Load, 7 A.M. to 12 P.M.	Lighting	Summer Schedule, (all day).	5% of all office lights. 20% of lights on first floor store. 10% of lights, first floor corridor. 30% of basement lights.
		Winter Schedule, 4:30 P.M. to 6:00 P.M.	75% of all office lights. 80% of all lights, first floor. 30% of all basement lights.
	Power	Intermittent, 70 to 80 per cent of motor rating.	Elevators. House Pump. Vacuum Cleaner, etc.
		Constant 100 per cent of motor ratings.	Fan Motors. Boiler feed pumps if electrically driven. Air washer circulating pump, etc.

The average elevator load is usually fairly constant except for the momentary fluctuations due to starting and equal to approximately 70 per cent of the connected elevator motor load from 8 A.M. to 5 P.M.

The maximum momentary fluctuation due to the starting of all the elevators at one time may be assumed equal to 135 per cent of the sum of the elevator motor ratings. A careful survey and study of the requirements to be met and the load curves of existing plants designed for a similar service are recommended. No hard and fast rules can be laid down covering the individual requirements of various classes of isolated plants.

Example. The following example will serve to illustrate in a general way the method employed in arriving at the expected loads the plant is to carry. Assuming that an examination of the plans for a 22-story office building, the first floor of which is given over to a bank and a number of small stores, discloses the following connected loads:

Lighting (60-watt tungsten lamps):

Offices	180 kw.
Stores and banks	15 "
Basement	5 "
Total	200 kw.

Elevators (electric traction type):

Nine 25-hp. motors ..... 168 kw.

Pumps (motor driven):

15-hp. triplex power-house pump.
10-hp. centrifugal power-house pump.
Two 5-hp. sump pumps.
Two 3-hp. air washer pumps.

Air Compressors.

Two 3-hp. compressors for motor and generator blowing, etc., 25 lb. pressure.

Fans:

Five fresh air ventilating fans, 40 hp.
Four exhaust fans, 22 hp.
One forced draft fan for mechanical stokers, 20 hp.

The total connected load is made up of 264 kw. of motors and 200 kw. for lights.

The maximum expected load will ordinarily occur in the late fall when the lights are on by five o'clock, at about which time the peak load occurs. This load may be approximately estimated as follows:

Elevators assumed as counterweighted for the entire weight of car plus 50 per cent of the live load,

in which event a car descending empty requires the same amount of power as a fully loaded car ascending.

Lighting load, 72 per cent of connected load, $0.72 \times 200 = 144$ kw.
Elevator load, 80 per cent of connected load, $0.80 \times 168 = 134$ "

Constant motor load:

House pump	15 hp.		
Air washer pumps	6		
Fans	82		
	103 hp.		77 kw.
Total expected maximum load			355 kw.

The maximum momentary elevator load may be assumed as 168×1.35 or 227 kw. This gives a total maximum momentary load of $227 + 144 + 77 = 448$ kw. The probable maximum fluctuation at any time during the day will then be: $227 - 168$ or 59 kw.

The maximum expected load from 8 A.M. to 5 P.M. will be about as follows:

Lighting 10 per cent of connected load	$0.10 \times 200 =$	20 kw.
Elevators, 70 per cent of connected load	$0.70 \times 168 =$	118
Constant load	=	77
Total	=	215 kw.

The evening load between the hours of 8 and 9 will not usually exceed 25 per cent of the peak-day load.

Lighting, 20 per cent of connected load		$0.20 \times 200 =$	40 kw.
Elevators, 10 per cent of connected load		$0.10 \times 168 =$	17
Constant motor load:			
House pump	15 hp.		
Forced draft fan (½ capacity)	10		
Basement ventilating fans	20		33 kw.
Total			90 kw.

From midnight to 5:30 A.M. the load will consist of a few lights, the vacuum cleaner and the basement ventilating fans, which will not total more than 25 kw.

As an approximate check on the above it has been observed from an examination of a number of office building load curves, for the late fall and winter months, that about the following proportion of loads exists:

Maximum load, 5 P.M.
From 9 A.M. to 4 P.M., 75 to 80 per cent of the maximum load.
From 8 P.M. to 9 P.M., 20 to 30 per cent of the maximum load.
From 12 midnight to 5 A.M., 10 per cent of the maximum load.

As a further check on the above calculations, we may apply the "demand factors" as given by Table 3.

Lighting	$200 \times 72.4 =$	145 kw.
Motors	$264 \times 65.1 =$	172
Total		317 kw.

This is seen to be somewhat less than the previous estimate for the maximum load.

Size and Division of Generating Units. The operating of machines much below their rated capacity is uneconomical, as will be noted by an inspection of the water-rate curves as shown in the Chapters on "Steam Engines" and "Steam Turbines." It is therefore advisable for economy in operation, as well as to insure continuous service, in the design of plants handling a varying load, to install two or more units. The smallest of these should be of such size that it will carry the load during the period of minimum demand at or near its normal rating. The remaining

units should be at least of sufficient size when taken together to carry the maximum estimated load, when operating at about 25 per cent overload.

It is the practice of some engineers to divide the estimated maximum load between 3 units of equal size, so that with one unit withdrawn from service the remaining two units are able to carry the peak load when operating at 33⅓ per cent overload.

In the comparatively small isolated plants for office buildings, hotels, department stores, etc., ranging in rated capacity from 200 to 1000 kw., the load may usually be most advantageously handled by three or four units, the smallest of which will be of 50 to 75 kw. capacity. In Federal buildings the largest size unit installed is limited to 150 kw,. In large office buildings and hotel power plants, however, units up to 500 kw. capacity have been installed.

In plants carrying a combined lighting and electric elevator load the sudden demands for power due to the starting of the elevator motors cause momentary fluctuations in the voltage and the lights to flicker unless a considerable excess generator capacity is in action over the amount as would be calculated from the actual power requirements. The excess generator capacity necessary to prevent this will depend largely upon the proportion of the constant lighting and motor load to the elevator load and sensitiveness of the engine governor to respond quickly to changes of load.

In Federal buildings the practice is to provide a generator capacity of approximately four times the rated kw. capacity of the elevators in service. In commercial practice, however, this is considerable in excess of the amount usually provided in office buildings. The starting current for direct current elevator motors varies from 35 to 50 per cent of the running current. The running current required will ordinarily not be more than 85 to 90 per cent of the current required when the elevator is operated at full rated capacity.

The starting current for alternating current motors for elevator service is frequently 200 per cent of the running current.

Example. For the loads given in the previous example the following combinations of units may be selected.

1–200, 1–100, and 1–50 kw. If no emergency or breakdown connection with the local electric company is to be provided, and as continuity of service is obviously essential, it would be advisable to install a spare 150 kw. unit, giving for the total equipment: 1–200, 1–150, 1–100, and 1–50 kw. unit.

The 100 and 200 kw. units will amply provide for the maximum late afternoon load, while one 200 kw. unit will take care of the maximum load that ordinarily occurs during the day.

During the summer months one of the larger units will in all probability take care of the maximum load.

The 50 kw. unit will take care of the night load after 9 o'clock, Sunday and holiday load. Under ordinary conditions an allowance of about 1.65 rated indicated horsepower per kw. rated generator capacity and 1.8 boiler horsepower per kw. rated generator capacity will prove satisfactory. The latter figure refers to non-condensing plants.

Selection of Generating Units for an Office Building. The following problem is given and solved by *J. H. Wells* ("Transactions A. S. M. E." Vol. xxv., 1904).

(The lighting load in this example is based on the use of the carbon filament lamp, which is rapidly becoming obsolete in up-to-date buildings. Tungsten illumination would reduce the lighting load as stated by at least 20 per cent, on the assumption that 40-watt tungsten lamps are substituted for the 16 c.p. 50-watt carbon filament lamps.—AUTHORS' NOTE.)

This building is equipped with hydraulic elevators operated by steam-driven pumps.

The figures used are an average; and are the results of tests and records made in perhaps fifty of the tall buildings in New York City. The building in question is designed for banking rooms on the first and second floors and above offices. Three boilers of 350 horsepower each are located in the cellar and the plant in the basement. The electric portion of this plant consists of two 125-kilowatt and 100-kilowatt and one 50-kilowatt generators (two fan motors of 15 horsepower each, and engine plant of sufficient horsepower to operate the entire electrical installation. These engines will be of the four-valve tandem compound type and the dynamos

direct current, 120-volt machines. The total floor area to be lighted is 196,700 sq. ft., and taking the average rate at one light for each 37 square feet of floor area, the number of lights as laid out on the plans is 5,316 plus 250 lights allowed for decorative effect; in banking rooms the total number of lights to be wired for is 5,566. Lamps are guaranteed at 50 watts per 16 candle-power, but this is when they are new; we, therefore, assume an average of 55 watts; this, therefore, means that with all the lights burning the total output would be 306 kilowatts. From experience we find the average working loads to be as follows:

	Percentage of Total	Lights Kw.	Power Kw.	Total Kw.	Operating Plant Kw.
Absolute peak load	70	214	20	234	
Average peak and running load for dark days	60	184	20	203	
Average peak load for 8 months	30	92	20	112	
Average day load for 8 months	30	92	20	112	
Average day load for 6 months	20	62	20	82	
Average low load for 12 months	16	49	20	69	
Average nights, Sundays and holidays	..	...	..	50	

In addition to the above there is usually an increase of 10 per cent over the above running loads on account of the desires of tenants. Under ordinary conditions it is customary to allow 1.6 horsepower in engine for each kilowatt output of the generator and 1.8 horsepower in boilers for each kilowatt in generators. Therefore, in practice we select the following main plant, which is elastic in its working and will take care of the following conditions:

(1) Maximum load 70 per cent of the total connected load plus 10 per cent—257 kilowatts.

(2) Average load 30 per cent of the total connected load plus 10 per cent—123 kilowatts.

To operate, therefore, under those conditions, we have selected the following plant:

Two generators of 125-kilowatt capacity each, either of which will carry the average peak running load, or both connected in multiple will carry the absolute peak loads which are on for short isolated periods only.

One generator of 100-kilowatt capacity to carry early running and low average loads for 12 months.

One generator of 50-kilowatt capacity as an auxiliary unit for nights, holidays, Sundays, and odd times.

Not only will this plant fulfil these conditions, but by means of the various combinations which may be made conditions between these averages may be satisfied economically.

Mr. N. S. Thompson, in his excellent treatise entitled "Mechanical Equipment of Federal Buildings," gives the following examples in proportioning units:

(1) Assuming that the constant light and power day load is 110 kilowatts and that two electric elevators are intermittently in use, each having a motor rated at 10 kw. and each motor requiring 15 kw. to start. The maximum instantaneous load possible under the conditions is 110 + 15 + 15 or a total of 140 kw. A 125 kw. unit would be selected for this service, as the machine has an overload capacity (25 per cent) of 156 kw. for two hours. The generator could easily take care of a vacuum cleaner or other small motor in addition to the load stated.

(2) Assume that the constant light and power day load is 50 kw. and that there are two electric elevators in service, each having a motor rated at 10 kw. and requiring a starting current of 15 kw. for each motor, or a total of 30 kw. intermittent load. A 75-kw. generator would be selected for this service. He further states that to insure continuous service never less than three units are installed and generally two large units, each sufficient to carry the peak load and one small unit to carry the after midnight load. Usually a four unit plant is selected, comprising two large units, each able to carry the peak load, and two small units, each capable of carrying the after midnight load. These statements apply to Federal buildings in which no break-down connections with the local electric companies service are provided.

CHAPTER XX

COST OF STEAM AND GAS POWER EQUIPMENT *

Cost of Individual Units. The following data by *Professor A. A. Potter* relative to the cost of power equipment appeared in "Power," Dec., 1913. In each case reported an attempt has been made to represent the cost in such a way that the data would apply and be useful over a fairly wide range of sizes or capacities. In order to do this, it was generally found necessary to establish a minimum charge to which must be added the product of the cost per unit of capacity times the rated capacity of the machine. This gives an equation which must be separately determined for each type of machine considered.

"The equations in the table are arranged in the alphabetical order of the machinery for which prices are given. The prices are f.o.b. at the factory, and do not include erection costs. There are many varying factors entering into erection costs, so that it is impossible to give general estimates which may be regarded as accurate. Some manufacturers quoted the following erection costs for high-speed engines:

Size of Engine Horsepower	Approximate Erection Cost in Dollars	Size of Engine Horsepower	Approximate Erection Cost in Dollars
75	125 to 150	300	300 to 400
100	150 to 200	450	400 to 450
150	200 to 300	600	400 to 600

"*Prof. C. H. Benjamin*, in his book on the 'Steam Engine,' gives the following formulas for the costs of engine settings:

"1. Setting for high-speed engines. Cost in dollars = 50 + 0.75 (horsepower).

"2. Setting for low-speed engines. Cost in dollars = 500 + 1.3 (horsepower).

"Settings for water-tube boilers vary from $400 for a 100-hp. boiler to about $650 for a 600-hp. boiler.

"In the case of internal-combustion engines, the erection will vary from 7 to 15 per cent of the total cost of the engines. The erection cost of large engines may be as low as 3 per cent. of the cost of the engine.

"Difficulty was experienced in developing an equation for the cost of stokers which would be applicable over a wide range, as the size of stokers for the same boiler horsepower varies greatly with the fuel to be handled, the available draft, and other conditions. Also, in the case of underfeed stokers which include a forced-draft equipment, the cost depends on the number of boilers. Thus a quotation of $1055 was given by one concern for an underfeed stoker to be used in connection with one 125-hp. fire-tube boiler; $1793 for an equipment suitable for two boilers of the same size, and only $6300 in the case of eight boilers. A manufacturer of front-feed stokers quotes $975 for a stoker equipment for one boiler, and $1680 for an equipment for two boilers. The equations apply very nearly to equipments of four stokers, or to a lesser number.

"The prices in the case of condensers are based on a cooling-water temperature of 60 deg. F., the equations are developed with reference to the pounds of steam condensed per hour.

"The prices for internal-combustion engines include standard equipment. This in the case of gasoline engines consists of a battery, gasoline tank, water tank or circulating pump, muffler, and all pipes and fittings needed for the ordinary installation. With oil engines, oil pumps, heating lamps and mufflers are supplied. Also with an internal-combustion engine above 25 hp., self-starting devices are usually included.

"The prices on oil engines include such internal-combustion engines as are suitable for burning very heavy oils. The cost of oil engines suitable for oils of 39 deg. Bé., or lighter, does not differ more than a few per cent from that for gasoline engines.

* Additional cost data on this sort of equipment will also be found in the preceding chapters.

TABLE OF COSTS OF STEAM AND GAS POWER-PLANT EQUIPMENT

Name of Apparatus	Type	Capacity	Equation of Cost in Dollars
Air compressors		Up to 4,000 cu. ft. per min	52 + 1.95 × cu. ft.
		Up to 850 cu. ft. per min	316 + 1.675 × cu. ft.
		Up to 550 cu. ft. per min	3.1 × cu. ft.
		Up to 350 cu. ft. per min	231 + 2.82 × cu. ft.
		Up to 600 cu. ft. per min	460 + 2.55 × cu. ft.
		Up to 500 cu. ft. per min	71.25 + 4.025 × cu. ft.
Boilers, steam		Under 20 hp	49.2 + 6.66 × hp.
	sq. in. or less	20 to 50 hp	116.4 + 3.35 × hp.
	sq. in. or less	Up to 50 hp	51.5 + 3 62 × hp.
	al, multi-tubular, 100 lb. per sq. in. or less		64 + 4 14 × hp.
			5.8 × hp. − 20
	Portable locomotive	hp	211 +
	Vertical, water-tube, pressures over 125 lb. per sq. in		121 +
	Horizontal, water-tube, pressures over 125 lb. per sq. in		912 +
Condensers	Barometric (28-in. vacuum)		149 +
	Jet condensers	. of steam per hr	1055 -
		. of steam per hr.; 28-in. vac	1176 -
	Surface condensers	26-in vacuum	116 +
		Up to 35,000 lb. of steam per hr.; 28-in. vacuum	1650 -
		Up to 80,000 lb. of steam per hr.; 26-in. vac	413 +
Economizers	Number of tubes 32 to 10,000, heating surface per tube = 12 to 13 sq. ft	Capacity in lb. of water per tube = 60 to 70	
		Economizer alone	$8 to $10 per tube
		Economizer erected	$12 to $15 per tube
Engines, internal com.	Gas engines	Up to 300 hp	33.6 × hp. − 115
	Gasoline engines, hit-and-miss governor	Up to 100 hp	141 + 24.3 × hp.
	Gasoline engines, throttling governor	Up to 75 hp	309 + 36.1 × hp.
	Oil engines	Up to 400 hp	63.3 × hp. − 316
	Producer gas engines, American mfr	Up to 300 hp	400 + 33.5 × hp.
Engines, steam	Simple,		
	Throttling governor, slide valve, vertical	Up to 70 hp	63.5 + 17.5 × hp.
	, slide valve, horizontal,	Up to 70 hp	107 + 13.3 × hp.
		Up to 200 hp	80 + 5.81 × hp.
	piston or balance slide valve, horizontal	Up to 500 hp	336 + 6 69 × hp.
	Automatic cut-off, single valve, vertical	Up to 30 hp	164 + 9.53 × hp.
		30 to 150 hp	372.5 + 9.55 × hp
	Flywheel governor, Corliss non-releasing valve, horizontal	Up to 600 hp	1100 + 8.94 × hp.
	Corliss governor and valves, horizontal	Up to 400 hp	1040 + 8.45 × hp.
		300 to 900 hp	730 + 9 1 × hp.
		Up to 400 hp	635 + 7.69 × hp.
		Up to 330 hp	735 + 8.0 × hp.
		Up to 200 hp	750 + 10.4 × hp.
		Up to 600 hp	1100 + 9.62 × hp.
		Up to 600 hp	2015 + 9.74 × hp.

TABLE OF COSTS OF STEAM AND GAS POWER-PLANT EQUIPMENT—(*Continued.*)

Name of Apparatus	Type	Capacity	Equation of Cost in Dollars
Engines, steam	Tandem compound,		
	Flywheel governor and slide valves, horizontal	Up to 400 hp	559 + 8.83 × hp.
	Flywheel governor and slide valves, vertical	Up to 140 hp	610 + 12.7 × hp.
	Flywheel governor, Corliss non-releasing valves, horizontal	Up to 300 hp	1295 + 10.79 × hp.
	Flywheel governor, multiple slide valves	Up to 500 hp	1010 + 7.65 × hp.
Fans and blowers	Sizes 70 to 140 in.		6.25 × (size in inches.)
Feed-water heaters	Open	Up to	114.5 + 0.3787 × hp.
		1500 to	326 + 0.237 × hp.
	Closed	Up to	40 + 0.72 × hp.
Generators, electric	Direct current (voltage 110–250), belted	Up to	21.1 + 23.5 × kw.
		10 kw.	10 × (kw.) − 9
	Direct-connected	Up to	313.3 + 10.93 × kw.
		300 to	12.08 × (kw.) − 382
	Alternating-current, belted	Up to	31 + 9.723 × kv.a.
	Direct-connected	Up to	375 + 7.477 × kv.a.
		250 to	2413 + 4.69 × kv.a.
Motors, electric	Direct-current, belted; small sizes	Up to	18.53 + 12.37 × hp.
		1.5 to	53.3 + 12.4 × hp.
		30 to 1 .00 r.p.m.)	191.7 + 10.94 × hp.
	Variable speed	Lower limit—(800 to 1000 r.p.m.)	213 + 8.264 × hp.
		Up to 10 hp.—Upper limit	64.1 + 36.786 × hp.
		Lower limit	69.2 + 10.56 × hp.
	Alternating current:		
	Single-phase (110-220 volts)	Up to 25 hp. (1200 to 1800 r.p.m.)	25 + 11.75 × hp.
	Belted, polyphase induction	Up to 130 hp. (1200 to 1800 r.p.m.)	116 + 4.72 × hp.
	Variable speed	Up to 25 hp	60.7 + 7.15 × hp.
		35 to 60 hp	157.6 + 3.573 × hp.
Producers, gas	Suction	Up to 300 hp	252 + 14.2 × hp.
	Pressure	Up to 300 hp	860 + 15.15 × hp.
Producer plants, gas	Suction	Up to 200 hp	570 + 46.5 × hp.
Pumps	Boiler feed		
	Single-cylinder, piston pattern	Up to 6000 gal. per hr	17.8 + 0.2586 × (gal. per hr.)
		6000 to 27,000 gal. per hr	106.8 + 0.011045 × (gal. per hr.)
		Up to 29,000 gal. per hr	585 + 0.0115 × (gal. per hr.)
	-packed, plunger pattern	Up to 24,000 gal. per hr	0.034 × (gal. per hr.)
	plunger pattern	Up to 49,000 gal. per hr	0.042125 × (gal. per hr.)
	e, single-stage	Up to 14,000 gal. per min	52 + 0.05525 × (gal. per min.)
	re, single-stage	Up to 5000 gal. per min	61 + 0.0868 × (gal. per min.)
		5000 to 20,000 gal. per min	210 + 0.0567 × (gal. per min.)
		Up to 2200 gal. per min	117 + 0.233 × (gal. per min.)
		Up to 20,000 gal. per min	60 + 0.05575 × (gal. per min.)
		Up to 20,000 gal. per min	50 + 0.0365 × (gal. per min.)
		Up to 1100 gal. per min	125.7 + 0.27 × (gal. per min.)
		Up to 20,000 gal. per hr	90 + 0.0316 × (gal. per hr.)
		Up to 83,000 gal. per hr	56 + 0.03867 × (gal. per hr.)
	Double-acting, triplex	Up to 89,000 gal. per hr	195 + 0.0148 × (gal. per hr.)
	Rotary force pumps	1200 to 20,000 gal. per hr	8 + 0.0117 × (gal. per hr.)
	Wet vacuum pumps	Up to 13,000 gal. per hr	18 + 0.01435 × (gal. per hr.)
		13,000 to 50,000 gal. per hr	14 + 0.00863 × (gal. per hr.)

TABLE OF COSTS OF STEAM AND GAS POWER-PLANT EQUIPMENT—(*Continued.*)

Name of Apparatus	Type	Capacity	Equation of Cost in Dollars
Purification plants	Water	1000 to 20,000 gal. per hr	1000 + 0.2 × (gal. per hr.)
Stokers	Chain-grate	100 to 300 boiler hp	86 + 4.28 × (hp.)
		300 to 500 boiler hp	434 + 3.1 × (hp.)
	Front-feed	100 to 660 boiler hp	312 + 3.015 × (hp.)
	Under-feed	Up to 600 boiler hp	379 + 2.785 × (hp.)
Superheaters	200 to 750 boiler hp.		
		100 deg. of superheat	165 + 2.578 × (hp.)
		200 deg. of superheat	52 + 3.466 × (hp.)
		300 deg. of superheat	40 + 4.28 × (hp.)
Transformers	Air-cooled	Sizes up to 3000 kv.a.	439 + 1.467 × kv.a.
	Oil-cooled	Sizes up to 30 kv.a.	
		25 cycles	52.9 + 8.1 × kv.a.
		60 cycles	26.2 + 6.25 × kv.a.
		Sizes 30 to 100 kv.a.	
		25 cycles	157 + .68 × kv.a.
		60 cycles	119.5 + 3.57 × kv.a.
	Water-cooled	Sizes up to 1000 kv.a.	181 + 1.25 × kv.a.
		1000 to 3000 kv.a.	805 + 1099 × kv.a.
Turbines, steam	Reaction type:		
	Turbine and generator	500 to 5000 kw	3385 + 13.33 × kw.
		5000 to 10,000 kw	17,500 + 10.5 × kw.
	Impulse type:		
	Turbine alone	Up to 50 hp	171.5 + 10.7 × hp.
		50 to 400 hp	10.74 × hp. − 54
	Turbine and generator	Up to 40 kw	304.2 + 36.78 × kw.
		25 to 350 kw	30.4 × kw. − 100
		1000 to 10,000 kw	8106 + 11.34 × kw.

"The capacity of producers is given in horsepower, this being based on a producer efficiency of 75 to 80 per cent, and 10,000 to 11,000 B.t.u. per brake horsepower per hour, as the term producer horsepower has no definite meaning unless it is based on the B.t.u. consumption of the internal-combustion engine to which the gas is supplied. Some manufacturers of gas producers have abandoned the horsepower rating, and rate their producers in pounds of coal, which is the same as the B.t.u. basis.

"The prices given for generators and motors apply to stand rd speeds. Of the many variables which must be taken into consideration in connection with prices on dynamo-electric machinery, speed is the most important, as the amount of copper in a machine (the voltage remaining constant) is determined by the speed for which it is designed.

"The prices for transformers are for voltages of 1100 and 2200. The increase in cost for higher voltages, above that for 1100 and 2200 volts, is about as follows:

Volts	Per cent.
6,600	2.5
11,000	7
22,000	18
44,000	40

"It is impossible to give the cost of switchboards in the form of an equation, as the requirements are different for each individual plant in the matter of circuits, protective devices, instruments, etc. There is also a great variation in the cost of electrical-measuring instruments of the same capacity."

Detailed Cost of a 2,900-Kw. Plant. ("Power," Jan. 4, 1916.) The abridged costs given are those of a 2,900-kw. steam plant owned and operated by the company at East Woburn, and the data shown represent, as nearly as was possible to procure them, the actual money expended on the installation from its original construction. The figures do not necessarily mean that these detailed costs would apply in building another station of this size somewhere else to-day, but they at least furnish a basis for comparison and form a starting point for similar analyses by engineers to whom cost data are accessible. Certain allowances for fixed charges are included to arrive at the true plant investment value.

EAST WOBURN STATION, CAPACITY 2,900 KW.

Land for station site	$4,200
Engineering, interest, contingencies, taxes and organisation expenses during construction, 8 per cent	336
	$4,536

POWER HOUSE BUILDING

About 100 × 130 ft.; frame structure, concrete foundation, brick fire wall separating boiler from engine room; roof, timber covered with tar and gravel. Plant in good condition at present.

Excavation	$1,481
Trenching	295
Concrete foundation and walls, 401 cu. yd. at $7	2,807
Concrete conduit, 0.4 cu. yd. at $8	3
Concrete piers, 10 cu. yd. at $8	80
Concrete floor, plain, 6 in. thick, 6,293 sq. ft. at 20c	1,259
Concrete floor, reinforced, 5 in. thick, 5,003 sq. ft. at 45c	2,251
Concrete steps and curbs, 7.9 cu. yd. at $8	63
Concrete roof, 3.5 in., reinforced, 259 sq. ft. at 35c	91
Concrete trenching, 5.5 cu. yd. at $7	38
Brick wall, 89 M. at $22	1,958
Brick piers, 2.7 M. at $24	65
Timber	5,170
Roofing tar and gravel, 13,970 sq. ft. at 6c	838

POWER HOUSE BUILDING—(*Continued.*)

Millwork	$1,557
Steel (including 28,899 lb. flues at 9c.)	4,922
Cast iron, 18,150 lb. at 3c	544
Brass railing, 522 lb. at 30c	157
Sheet metal	33
Plumbing	178
Electric lighting	414
Painting, oil, 1,900 sq. yd. at 18c	342
Painting, cold water, 1,369 sq. yd. at 12c	164
Plaster, 600 sq. yd. at 28c	168
Exhaust, injection and discharge, etc	3,953
Water pipe and hangers	2,751
	$31,582

MISCELLANEOUS STRUCTURES

Coal tracks and scale in boiler room	$1,476
Tank on power house	163
Fence, 686 ft. long	744
Hot well	260
Cold well	2,295
Dam	542
Pondage	1,980
Trough	81
Miscellaneous supports	236
	$39,359
Engineering, interest, insurance and contingencies, 11 per cent	4,329
Taxes and organization, 3.5 per cent	1,377
	$45,065

CHIMNEY

Built in 1912; Custodis, 175 ft. high; diameter at top, 9 ft.

Excavation, 139 cu. yd. at $1	$139	
Concrete, 124 cu. yd. at $7	868	
Brick, common, 110 M. at $20	2,200	
Brick, radial, 5,920 cu. ft. at 40c	2,368	
Brick, radial fire, 242 cu. ft. at 75c	181	
Lightning rod, 175 ft.	130	
Cast-iron door	10	
Steel lintels, 814 lb. at 4c	33	
Iron steps	100	
	$6,029	
Fixed charges as above, 14.5 per cent	874	
		$6,903

COAL TRESTLES AND SHED

Coal trestle	$5,449
Store shed	320
Oil house	248
Hydrant houses	302
Water softener building	1,180
Total structures cost	$59,467

STATION EQUIPMENT

Six 400-hp. B. & W. boilers and superheaters (water-tube), at $14.35 per boiler hp	$34,428
Foundations for above	1,391
One Spencer damper regulator	95
One Simmance-Abady precision CO_2 recorder	300
Two G. E. indicating steam-flow meters	144
Four 1.5-ton fuel charging cars	400
One 5 x 8-in. Deane triplex boiler-feed pump	462
Foundation for above	34
One 25-hp. New England direct-current motor	365
Foundation for above	23
One 10 x 16 x 12-in. Deane duplex boiler-feed pump	325
Foundation for above	53
One 2.5 four-stage Alberger-Terry boiler-feed pump	975
Foundation for above	29
One 7.5 x 10.25 x 10-in. Worthington vertical duplex boiler-feed pump	375
Foundation for above	18
One 4 x 6-in. Deane triplex boiler-feed pump	266
Foundation for above	8
One 7.5-hp. G. E. direct-current motor	225
One 4.5 x 2.75 x 4-in. Worthington duplex pump	81
One 5.25 x 3.5 x 5-in. Deane duplex pump and receiver	79
Two 30 x 96-in. Wainwright tubular closed heaters	1,120
One 30 x 90-in. Wainwright tubular closed heater	560
One 34 x 108-in. Wainwright tubular closed heater	950
Foundation for above	26
One 34 x 96-in. "National" closed coil heater	845
Foundation for above	4
One Sturtevant flue-gas economizer	5,174
Foundation for above	264
One 2100-hp. "We-Fu-Go" water purifier	3,750
One 2-in. recording and indicating venturi meter	500
One 18 x 10 x 12-in. Platt duplex underwriters fire pump	890
Foundation for above	23
Station piping (approximately $10 per kilowatt)	29,656
Pipe covering	1,418
One 30.5 x 48 x 48-in. Penn. Corliss cross-compound engine	22,387
Foundation for above	4,041
Two 28 x 52 x 48-in. Penn. Corliss cross-compound engines	44,760
Foundations for above engines (2)	12,721
One 28 x 60 x 60-in. Cooper-Corliss cross-compound engine	25,600
Foundation for above	5,254
One 13.5 x 24 x 24-in. Smith-Vaile jet condenser	1,093
Foundation for above	42
Two 14 x 26 x 24-in. Deane uniplex jet condensers	2,690
Foundations for above	79
One Wheeler jet condenser and auxiliaries	5,115
Foundation for above	92
One 50-hp. G. E. direct-current motor	725
Foundation for above	20
One 6-in. Lawrence centrifugal pump and motor	602
One 12-in. Lawrence centrifugal pump	248
One 9.5-in. Westinghouse locomotive-type air compressor	162
One 2.25 x 3-in. Blake triplex oil pump	78
One 2-hp. New England direct-current motor	85
One 2 x 1.25 x 2.75-in. Blake duplex oil pump	30
One White Star oil filter	660

STATION EQUIPMENT—(*Continued.*)

One oil- and waste-saving machine	$160
Miscellaneous tanks, filters, etc	366
Three G. E. 850-kw., engine-type, 550-volt, multipolar, direct-current generators	36,535
One G. E. engine-type, 550-volt, multipolar, interpole, direct-current generator	17,260
Switchboards and wiring	8,010
Miscellaneous equipment and tools	612
	$274,683
Engineering, interest, insurance and contingencies, 10.5 per cent	28,842
Taxes and organization, 3.5 per cent	9,614
Total equipment	$313,139

SUMMARY OF PLANT COST

Land	$4,536
Building and structures	45,065
Chimney	6,903
Coal trestle, shed, etc	7,499
Equipment	313,139
Grand total	$377,142
or per kw	$130.05

Comparative Costs of Three Types of Power Plants. A comparison of the cost of three different ways of providing an independent plant of 1,000 indicated horsepower for operating a variety of motor-driven machines is given in a recent report by *F. W. Dean*. The first plan considered was that of installing a 1,000 horsepower condensing Corliss engine, for which the costs were thus estimated:

Equipment	Cost per Indicated Horsepower	Cost per 1,000 Indicated Horsepower
Engine and condenser	$20.00	$20,000
Foundations	5.50	5,500
Electric generators	12.00	12,000
Boilers	7.50	7,500
Smoke flue	0.75	750
Chimney	2.50	2,500
Heater	1.00	1,000
Pumps	0.50	500
Buildings	20.00	20,000
Total Cost	$69.75	$69,750

The costs of operation were figured thus:

Fixed charges, 13 per cent of $69.50	$9.07
Attendance	3.21
Oil, waste and supplies	0.20
	$12.48

For coal used, including banking, the following estimate was made, assuming a good bituminous:

$$\frac{1 \text{ hp.} \times 1.75 \text{ lb.} \times 9 \text{ hrs.} \times 310 \text{ ds.}}{2{,}000 \text{ lb.}} = 2.441 \text{ tons.}$$

2.441 tons at $2.75 (the local price)	$6.71
Add fixed charges, etc., as above	12.48
Total annual cost of steam power per i.hp.	$19.19

This figure could be diminished to about $18 per indicated horsepower per year by charging to the non-power uses of steam the proper proportion of the operating charges.

Estimate of Cost of 1,000 *I. Hp. Plant using Gas Engines and Producers.* For gas engines and producers, the cost of plant on the i.hp. basis was set at $67.50, the figure being reached as follows:

Two horizontal double-acting gas engines	$21,000
Two 300-kw. generators, 60-cycle, 220 volts	6,600
Two 38½-kw. exciter sets	3,000
Two producers	7,700
	$38,300
Add about 10 per cent for freight and erection	3,800
	$42,100
Foundations	1,100
	$43,200
Add about 10 per cent for contingencies	4,300
	$47,500
Cost of buildings	20,000
	$67,500

The cost of operating this plant was figured in this way:

Fixed charges on plant, 14 per cent of $67.50	$9.45
Attendance per i.hp. per year	3.21
Oil, waste, and supplies	0.50
	$13.16

To this is added the cost of coal, which was taken as 2 lb. per kw.-hour, including stand-by losses, equivalent to 1.28 lb. per i.hp.-hour. The total coal per i.hp. per year would be

$$\frac{\text{i.hp.} \times 1.28 \text{ lb.} \times 9 \text{ hrs.} \times 310 \text{ ds.}}{2{,}000 \text{ lbs.}} = 1.786 \text{ tons.}$$

1.786 tons at $2.25 (the local price)	$4.02
This added to $13.16 gives the yearly cost per i.hp. with gas engines as	17.18

Estimate of Cost of 1,000 *I. Hp. Plant using Steam Turbines.* Approximate costs for a steam turbine plant were these:

Two 300-kw. steam turbines with condensers, at $47 per kw.	$28,200
Boilers, $12 per kw	7,200
Piping, flues, heaters, pumps, etc., at $7	4,200
Foundations, at $1	600
Chimney, at $4	2,400
Buildings, at $30	12,000
	$54,600
Cost per kw.	$90
Cost on i.hp. basis	57

This is a considerably lower plant cost than that for either reciprocating engines or the gas plant, and therefore means a lower operating cost than for either of the other two. Steam turbines were recommended by *Mr. Dean.*

CHAPTER XXI

UNITS EMPLOYED IN REFRIGERATION PRACTICE

Refrigeration. The general conception of the term "refrigeration" implies the lowering of the temperature (cooling) of a body below the temperature of the surroundings by the abstraction of heat from the body or substance in question.

It further implies the *continual* extraction of heat from the enclosure in which the bodies being refrigerated are stored in order to maintain them at the lower temperature level, as it is manifestly impossible to construct the walls of the enclosure so as absolutely to prevent the entrance of heat by transmission from the warmer outside or exterior.

The Measure of Refrigerating Effect. The quantity of heat abstracted or absorbed is measured by the British thermal unit, the mechanical and electrical equivalents of which are given for reference.

1 B.t.u. = 778 ft.-lb.

= 0.2930 watt-hours.

The commercial unit of refrigeration is termed the "ton of refrigeration," and is the heat required to melt (not manufacture) one ton (2000 lb.) of pure solid ice; or, in other words, is the heat absorbed by 2000 lb. of pure ice melting into water at 32° F. One pound of ice melting under this condition will absorb 144 B.t.u., termed the "latent heat of ice."

One ton of refrigeration is therefore equal to $2000 \times 144 = 288{,}000$ B.t.u. Refrigeration calculations are generally made on a 24-hour basis.

1 ton refrigeration = 288,000 B.t.u. per 24 hours.

$$= \frac{288{,}000}{24} = 12{,}000 \text{ B.t.u. per hour.}$$

= 200 B.t.u. per minute.

Rating of Refrigerating Machines. Refrigerating machines are rated by the number of tons of refrigeration they are capable of extracting in 24 hours with the additional information as to the temperature and pressure range through which they are operating while performing this duty.

The ice-making capacity of a machine, in tons of ice, is usually assumed as approximately equal to 60 per cent of its refrigerating capacity. To produce 1 ton of ice first necessitates the lowering of the temperature of the water used to the freezing temperature, or 32° F., the extraction of its latent heat and a still further reduction in the temperature of the ice formed to that of the temperature of the brine tank in which it is frozen. The average temperature of the manufactured ice harvested is approximately 16° F. Assuming the initial temperature of the water as 90° F., we require for freezing 1 lb. of ice the extraction of the following amount of heat:

To lower the temperature of 1 lb. of water to freezing, $1 \times (90 - 32) \times 1$ (sp. ht. water) = 58 B.t.u. are abstracted. To freeze 1 lb. of water, 1×144 (latent ht. ice) = 144 B.t.u. are abstracted. To reduce the temperature of 1 lb. of ice formed, $1 \times (32 - 16) \times 0.5$ (sp. ht. ice) = 8 B.t.u. are abstracted. $58 + 144 + 8 = 210$ B.t.u., total.

To this amount must be added approximately 20 per cent to allow for the heat transmission losses of the brine tank, ice storage room, heat introduced by the warm cans, etc., which would make $210 \times 1.20 = 252$ B.t.u. to be extracted in the manufacture of 1 lb. of ice, or $252 \times 2000 =$

504,000 B.t.u. per ton of ice manufactured, 1 ton of refrigeration being equal to 288,000 B.t.u. The relation between the ice making capacity and the refrigerating capacity of a machine working through the same temperature range would be as 288,000 is to 504,000 or 1 to 1.75. The ice-making capacity is, therefore, usually roughly assumed as being equal to approximately 60 per cent of the refrigerating capacity.

Refrigerating Load. The first step in the calculations required for a cold storage plant is the determination of the "refrigeration load" expressed in "tons of refrigeration in 24 hours" required to be taken care of by the machine and accompanying apparatus.

There are various empirical rules and tables in use which are intended to convey this information to the engineer, but unfortunately they often fall short of giving a correct estimate of the particular case at hand. The calculations should, whenever possible, be based upon rational formulas derived from accepted experimental data.

In the determination of the refrigeration load the following items are taken into account.

(1) *To Cool the Goods Stored.* The B.t.u. to be abstracted from the stored goods depending upon the initial and final desired temperature of the goods, their specific heat and weights.

(2) *To Offset Heat Transmission of Cold Storage Room Walls.* The B.t.u. to be abstracted from the room or rooms which is transmitted through the walls from the outside, depending upon the difference in temperature between inside and outside and the character of the construction with particular reference to the insulation.

(3) *For Ventilation.* The B.t.u. to be abstracted from the air passing into the rooms for ventilating purposes, including the amount required for lowering the temperature and precipitation of the moisture contained or held in suspension by the entering air, which depends upon the initial and final temperatures of the air and the relative humidity. This item assumes considerable importance in problems relating to air cooling and drying for special purposes. (See example given later.)

(4) *To Offset the Heat Generated Inside the Cold Storage Rooms.* The B.t.u. to be abstracted from the rooms to offset the heat generated by men working in the rooms and artificial lights, motors, fans, etc., located in the rooms.

To Cool the Goods Stored. For this item is required a table of specific heats covering the ordinary range of goods stored and the temperature at which they are carried. For special requirements not covered by such a table, the determination of the specific heat is ordinarily a comparatively simple laboratory experiment

TABLE 1

COMPOSITION AND SPECIFIC HEAT OF FOOD PRODUCTS AND STORAGE TEMPERATURES

Product	Temp. Carried	Composition		Specific Heat Above Freezing	Specific Heat Below Freezing	Latent Heat of Freezing
		Water, Per Cent	Solids, Per Cent			
Lean beef	30	72.00	28.00	.77	0.41	104
Fat pork	30	39.00	61.00	.51	.30	56
Eggs	30	70.00	30.00	.76	.40	101
Potatoes	34	74.00	26.00	.80	.42	107
Cabbage	33	91.00	9.00	.93	.48	131
Carrots	33	83.00	17.00	.87	.45	120
Cream	33	59.25	30.75	.68	.38	85
Milk	35	87.50	12.50	.90	.47	126
Oysters	35	80.38	19.62	.84	.44	116
Whitefish	15	78.00	22.00	.82	.43	112
Chickens	28	73.70	26.30	.80	.42	106
Ice	28	100.00	0.00	1.00	.504	144

Tables 1, 2 and 3 will be found convenient in estim

Let s = specific heat of goods.
w = weight, lb.
t_1 = outside temperature, degrees F.
t = inside temperature, degrees F.

B.t.u. required = $s \times w \times (t_1 - t)$.

If any of the goods are to be frozen, that is, carried necessary to add the B.t.u. to be abstracted in order to in the goods, in which case the total B.t.u. required = $w \times 144$ (latent ht. ice) $\div$ 100.

The figures in the last column, Table 1, showing the tained by multiplying the latent heat of ice or 144 heat u in the different materials considered as the solid constitu only the liquid or watery portion of these materials is co of them.

TABLE 2

SPACE REQUIRED FOR REFRIGER

Material	Average Weight, Pounds	Floor Space, Square Feet
1 Barrel apples or potatoes	180	4
1 Tub butter	60	2.5
1 cheese	60	2.
1 case eggs (30 doz.)	70	...
1 beef	700	9.
1 sheep	75	2.
1 hog	250	...
1 calf	90	...

Meat rails placed approximately 30 inches on centers.

To Offset the Heat Generated Inside the Cold Storag be obtained from the following:

One workingman gives off approximately.....
One gas light gives off approximately.....
One 16 C.P. incandescent light gives off.....

If a fan is used to circulate the cold air in the rooms in Chapter XXII), as is done in the case of refrigerating by th by the fan will be directly introduced into the circulation refrigeration. One horsepower

is the equivalent of $\frac{33{,}000 \times 60}{778} = 2545$ B.t.u. per hour.

air, measured in inches of water column at the fan outlet, re the ducts and create the velocity of circulation at the most lb. per sq. ft. will equal $5.2 \times p$.

Q = cu. ft. of air circulated per minute.

E = mechanical efficiency, approximately 40 per cent f 50 per cent for the multi-bladed type.

Then the brake horsepower of fan will be

$$\text{d.hp.} = \frac{5.2 \times p \times Q}{E \times 33{,}000}.$$

In a well proportioned system of ducts and cooling chamber p should not ordinarily exceed 1″ water. The velocity of air should not exceed 2500 ft. per minute, in the main air duct and approximately 600 ft. per minute in the branch ducts.

TABLE 3

APPROXIMATE COLD STORAGE TEMPERATURES

Article	Temperature, Degrees Fahr.	Article	Temperature, Degrees Fahr.
Apples	30	Huckleberries, frozen	20
Asparagus	33	Ice	28
Bananas	55	Ice cream, short carry	15
Beans, fresh	32	Lemons, short carry	50
Beans, dried	45	Lemons, long carry	38
Beef, fresh, short carry	35	Lambs	32
Beef, fresh, long carry	30	Lard	40
Beef, dried	40	Livers	20
Beer, in barrels	32	Maple syrup and sugar	45
Beer, in bottles	45	Meats canned	40
Berries, fresh, short carry	40	Meats, salt, after curing	43
Buckwheat flour	42	Milk, short carry	35
Butter	14	Nursery stock	30
Butterine	20	Nuts in shell	40
Cabbage	33	Oatmeal	42
Cantaloups, short carry	40	Oils	45
Cantaloups, long carry	33	Oleomargarine	20
Carrots	33	Onions	32
Celery	32	Oranges, short carry	50
Cheese, long carry	35	Oranges, long carry	34
Chestnuts	34	Oxtails	30
Chocolate dipping room	65	Oysters in shell	43
Cider	32	Oysters in tubs	35
Cigars	42	Parsnips	32
Corn, dried	45	Peaches, short carry	50
Cornmeal	42	Pears	33
Cranberries	33	Peas, dried	45
Cream, short carry	33	Plums	32
Cucumbers	38	Potatoes	34
Currants, short carry	32	Poultry, dressed, iced	30
Dates	55	Poultry, short carry	28
Eggs	30	Poultry, after frozen	10
Figs	55	Poultry to freeze	0
Fish, not frozen, short carry	28	Raisins	55
Fish, fresh water, frozen	18	Ribs, not brined	20
Fish, salt water, not frozen	15	Salt meat curing room	32
Fish, to freeze	5	Sardines, canned	40
Fish, dried	40	Sauerkraut	38
Flowers, cut	36	Sausage casings	20
Fruits, canned	40	Scallops, after frozen	16
Fruits, dried	40	Sheep	32
Furs	28	Shoulders, not brined	20
Game, short carry	28	Sugar	45
Game, after frozen	10	Syrup	45
Game, to freeze	0	Tenderloins	33
Ginger ale	36	Tobacco	42
Grapes	36	Tomatoes, ripe	42
Hams, not brined	20	Watermelons, short carry	40
Hogs	30	Wheat flour	42
Honey	45	Wines	50
Hops	32	Woolens	28

CHAPTER XXII

HEAT TRANSMISSION AND CONSTRUCTION OF COLD STORAGE WALLS

HEAT TRANSMISSION OF COLD STORAGE WALLS*

The heat transmission of the walls of a cold-storage room may be estimated from the data derived from tests as given by Table 5 "Heat Transmission" taken from Volume I devoted to Heating and Ventilation. Table 6, following, has been calculated from the above-mentioned data.

The vital importance of constructing a plant well adapted to resist the entrance of heat from external sources will be appreciated, when it is realized that perhaps nearly three-quarters of the total fuel bill of the average general cold-storage plant goes to offset the heat "leakage" through the walls.

The heat transmission of various materials may be roughly compared by an inspection of their densities.

In order to prevent as far as possible the entrance of heat into a refrigerated room, we have, in general, two courses open to us. We may use either extremely thick walls of the ordinary materials of construction or comparatively thin walls, well insulated. The latter course, being invariably cheaper and occupying less space, is the general rule.

There, however, exists a practical limit beyond which the interest on the investment for this valuable feature will offset the saving incurred. If the engineer, architect, and owner would more often investigate the economic portion of the problem, which is usually not difficult of solution, later disappointment might be averted. Proper construction and insulation are often more important than the selection of the refrigerating machinery.

Heat Transmission through Building Walls. The amount of heat which must be supplied the interior of a building artificially warmed, or must be extracted when the building is refrigerated, depends largely upon the type of construction employed. The transfer of heat through building construction has been experimentally investigated by the French physicist *Peclet* and many other later experimenters. The laws governing the transfer of heat which *Peclet* stated have been the basis of practically all treatises that have since been written on this subject. The transfer of heat always takes place, or heat is said to flow or pass, from a warmer to a colder body. It is assumed that the temperature inside the building is above the outside in the following discussion.

Refer to Fig. 1–2, showing a section of a homogeneous wall, and let

t_0 = mean temperature of outside air.
t = mean temperature of inside air.
t_1 = temperature of inside wall surface.
t_2 = temperature of outside wall surface.
X = thickness of the wall in inches.

Heat will be transferred to the inside wall surface and be emitted by the outside wall surface in two ways. The so-called *radiant* heat passes in a straight line from the surface of the warmer body A, through the air, without appreciably heating it, to the receiving colder surface. The air in direct contact with the warmer body will absorb heat, and by the natural circulation transfer and give it up in turn to the wall surface. This kind of heat transfer is termed *convection*. The heat emission from the outer surface of the wall takes place in the reverse order. The transfer of heat from the inside to the outside wall surface through the material composing the wall is termed *conduction*.

*NOTE.—The first nine pages of this chapter have been taken from the authors' work on "Heating and Ventilation," which is Volume I.

Radiation. The quantity of heat which the surface of a material is capable of receiving or giving off to the surroundings by radiation is independent of the form, provided there are no re-entrant surfaces. It depends solely upon the nature of the surface and the absolute tem-

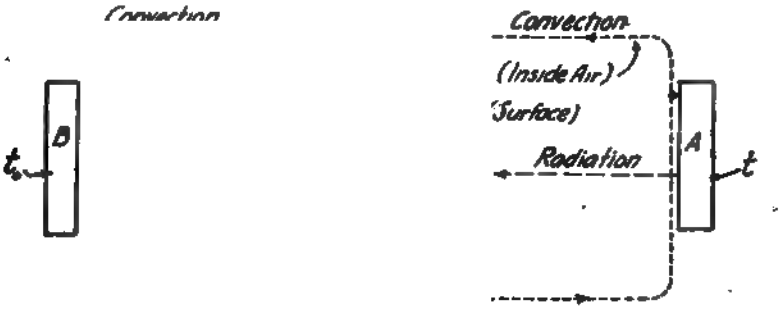

FIG. 1-2.

perature of the surface in question and the absolute temperature of the object to or from which radiation is taking place.

The Stefan-Boltzman Radiation Law. The energy radiated from a black body is proportional to the difference of the fourth powers of the absolute temperatures of the radiating and receiving bodies, or

$$Q = D\left[\left(\frac{T_1}{100}\right)^4 - \left(\frac{T_0}{100}\right)^4\right] \text{ in which}$$

Q = B.t.u. radiated per sq. ft. per hour.
T_1 = Absolute temperature of the radiating body.
T_0 = Absolute temperature of the receiving body.
D = A constant.
= 0.1685 for a black body.

The radiation constant D for other than the black body depends upon the substance and the character of the radiating surface. The following values are taken from *Hütte:*

TABLE 1
RADIATION CONSTANTS

Material	Value of D
Glass, smooth	0.154
Brass, dull	.086
Copper, slightly polished	.0278
Wrought iron, dull	.154
Wrought iron, clean and bright	.058
Cast iron, rough	.187
Lime plaster, rough, white	.151
Slate	.116
Red sandstone finished smooth	.100

In applying the above formula and constants in practice it is necessary to make several assumptions which are of doubtful accuracy.

It is generally assumed that the temperature of the objects from which radiation takes place to the inside wall surface is the same as the inside air temperature, and that the temperature of the objects to which radiation takes place is the same as the outside air temperature.

The temperatures of the wall surfaces depend upon the temperature difference between the inside and outside air and the insulating value or conductivity of the material composing the wall.

At present there are no published data which give reliable information on the temperature differences referred to from which inside and outside wall temperatures may be determined.

Convection. The quantity of heat which may be transferred by convection or air contact, from a warmer to a colder surface, is independent of the form of the surface. It depends upon the difference in temperature between the surface and the mean temperature of the air in contact with it and also the rapidity of the circulation of the air over the surface.

A natural circulation of air exists within an artificially heated room due to the tendency of the warmer and less dense air to rise to the ceiling, while the air surrounding a building is often in rapid circulation. There are so many factors that affect the heat loss from the walls of a building by convection that it is quite impossible to give more than a rough approximation for this value.

Combined Coefficient of Radiation and Convection—K. Reliable experimental data are lacking for both the *radiation* and *convection coefficients* of the various materials of building construction. It is difficult to separate, in experimental work, the heat that is given off by radiation from that which is removed by convection. The combined heat loss due to both radiation and convection in practically still-air tests is, however, not difficult to obtain, and for the present, at least, furnishes the most satisfactory method of treating the problem.

The *combined coefficient* is defined as the heat absorbed or given off per square foot of surface per hour by radiation and convection under certain conditions of air movement, per degree difference in temperature between the surface and the average temperature of the air. If the air movement is different on the two sides of the wall, the value of the combined coefficient will of course be different owing to the fact that the heat loss by convection is different.

Let K_1 = the combined coefficient for the inside wall surface.
K_2 = the combined coefficient for the outside wall surface.
$K_1 (t - t_1)$ = the heat absorbed by the inside wall surface per sq. ft. per hour. (B.t.u.)
$K_2 (t_2 - t_0)$ = the heat given off by the outside wall surface per sq. ft. per hour. (B.t.u.)
Then $K_1 (t - t_1) = K_2 (t_2 - t_0)$.
In which t and t_1 = temperature of the inside air and inside wall surface respectively.
t_0 and t_2 = temperature of the outside air and outside wall surface respectively.

The following average values of K_1 (Table 2) were determined from a series of tests made under the direction of the authors.* The tests were run under practically still-air conditions, the only movement of the air being that due to the natural currents existing in the room in which the tests were conducted.

TABLE 2

VALUES OF K STILL AIR FROM AUTHORS' TESTS

Brickwork	1.35 to 1.40	Glass Window	1.50
Concrete	1.30	Sheet Asbestos	1.40
Cork Board	1.25	Magnesia Board	1.45
Cement Plaster Finish	0.98	Wood (finished surface)	1.40

* The tests referred to were conducted by *L. C. Lichty, Univ. of Ill.*, 1915.

The average value of K_1 from above data is 1.34. The value of K increases with the velocity of air over the surface. The value of K_2 for brickwork and wood, for various velocities of

air or wind movement, may be obtained by multiplying the values of K_1 from the above table by the factors given in Table 3.

TABLE 3

MULTIPLIERS FOR DETERMINING K_2

Velocity, Miles per Hour	Multipliers of K_1	
	Brickwork	Wood
5	2.38	2.19
10	3.20	2.71
15	3.76	2.95
20	4.22	3.02

In practice the exposed walls of a building are not subjected to an average wind movement of more than 15 miles per hour usually. The authors, in their own practice, have adopted the general rule that the value of K_2 for an outside wall surface may be considered as being equal to three (3) times that of the inside wall surface.

The heat transmission of walls calculated in this manner gives results that are in accord with the general practice of heating and ventilating engineers.

Conductivity. The amount of heat that will be transmitted through a material having parallel surfaces, due to a difference in temperature between these surfaces, is termed the conductivity of the material. The amount of heat that a given material will transmit is directly proportional to the difference in temperature between the surface and inversely proportional to the thickness.

Let C = coefficient of conductivity, or B.t.u. transmitted per sq. ft. per hour per inch of thickness per degree Fahrenheit difference in temperature of the two surfaces.

t_1 = temperature of inside surface.

t_2 = temperature of outside surface.

X = thickness of wall inches.

Then $\frac{C}{X}(t_1 - t_2)$ = heat transmitted by conduction per sq. ft. per hour.

It is obviously impossible to give a table of exact conductivities of the various materials of building construction, owing to the fact that two samples of the same kind of material will often be found to vary considerably both in density and conductivity.

The following table gives the results of tests conducted under the direction of the authors:

TABLE 4

COEFFICIENT OF CONDUCTIVITY C FROM AUTHORS' TESTS

B.t.u. transmitted per sq. ft. per hour per inch thickness per deg. F. difference in temperature of the two surfaces. Materials thoroughly dry

	Wt. per Cu. Ft.	C
*Brickwork	132. lb.	4.00–(5.00)
Concrete (Stone 1. 2. 4 mix.)	140. "	8.30
Wood (Fir) ½" thick	33.4 "	1.00
Cork-Board Insulation	9.7 "	0.32
Corrugated Asbestos Board	20.4 "	0.48
Sheet Asbestos	48.3 "	0.29
Magnesia Board	13.5 "	0.51

* It is recommended that a value of C = 5. be used in the calculation for the heat transmission of brickwork to allow for an increased conductivity due to the possible presence of moisture.

The following figures are the conductivities for the thickness stated. (B.t.u. per sq. ft. per hour per deg. difference in temp. of the two surfaces.)

Glass (0.085″)	24.3
Window (76.3% glass)	8.64
Double Window with ½″ air space	1.04
2″ Hollow Tile plastered both sides	0.99
4″ Hollow Tile plastered both sides	0.61
6″ Hollow Tile plastered both sides	0.47
2″ Hollow Tile plastered both sides with ready prepared gravel roofing applied to one side only	0.84

The following additional values of C are quoted from various sources:

Concrete (Stone 1. 2. 4 mix.) (*Norton*)	6.25
Concrete (Cinder 1. 2. 4 mix.) (*Norton*)	2.35
Brickwork (*Poensgen*)	3.42
Sandstone (*Poensgen*)	9.00
Packed Granulated Cork (6.25 lb. per cu. ft.)	0.35
Packed Mineral Wool (16.3 lb. per cu. ft.)	0.35
Mortar	8.00

Calculation for Heat Transmission of Walls. The amount of heat received by the inside wall surface, the amount conducted through the wall, and the amount emitted by the outside surface must evidently be equal to one another.

Let u = the heat transmission of the actual wall per sq. ft. per hr. per deg. difference in temp. of the air on the two sides.

$$u(t - t_0) = K_1(t - t_1)\frac{C}{X}(t_1 - t_2) = K_2(t_2 - t_0) \quad \ldots\ldots\ldots (1)$$

$$\therefore u = \frac{1}{\frac{1}{K_1} + \frac{1}{K_2} + \frac{X}{C}} \quad \ldots\ldots\ldots\ldots (2)$$

The value of $\frac{X}{C}$ for thin metal plates, building paper or glass is so small that it may safely be neglected in the calculations. If the wall is composed of several layers of different materials in contact with one another (no air spaces), then

$$u = \frac{1}{\frac{1}{K_1} + \frac{1}{K_2} + \left(\frac{X_1}{C_1} + \frac{X_2}{C_2} + \frac{X_3}{C_3} + \text{etc.}\right)} \quad \ldots\ldots\ldots (3)$$

in which X_1, X_2, X_3, etc., are the thicknesses of the various materials in inches; C_1, C_2, C_3, etc., are the corresponding coefficients of conductivity, and K_1 and K_2 are the combined coefficients of radiation and convection for the inside and outside wall surfaces.

Values of u for a variety of building materials are given in Tables 5 and 6.

Example. The following examples will serve to illustrate the method employed in calculating the heat transmission of various materials, as given in Table 5.

15″ Brick Wall. Fig. 3.

$K_1 = 1.4 \quad K_2 = 3 \times K_1 = 4.2 \quad C = 5 \quad X = 13.$

$$u = \frac{1}{\frac{1}{1.4} + \frac{1}{4.2} + \frac{13}{5}} = 0.281.$$

Assuming an inside air temperature $t = 70°$ and an outside temperature $t_0 = 0$, the heat loss under these conditions will be $0.28 \times (70 - 0) = 19.7$ B.t.u. per sq. ft. of surface per hour.

EXAMPLES IN THE CALCULATION OF HEAT TRANSMISSION OF VARIOUS CONSTRUCTIONS

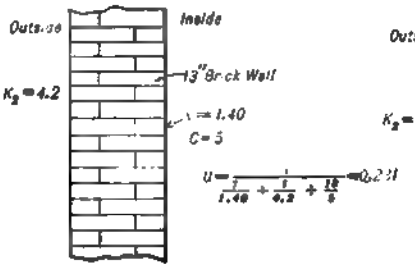

Fig. 3

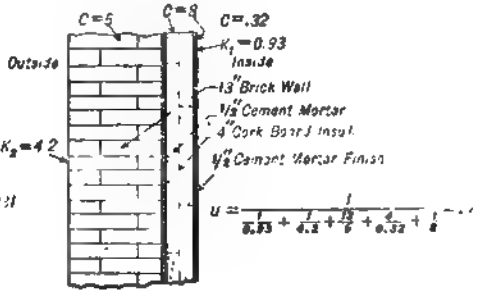

Fig. 4

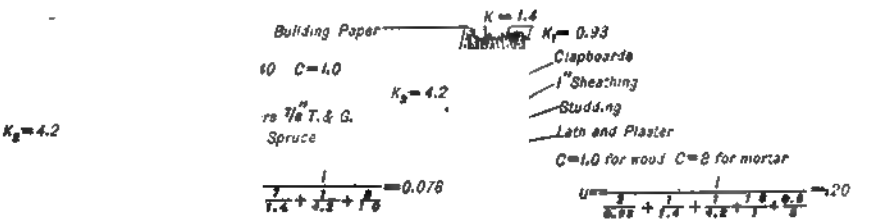

Fig. 5

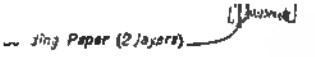

Fig. 6

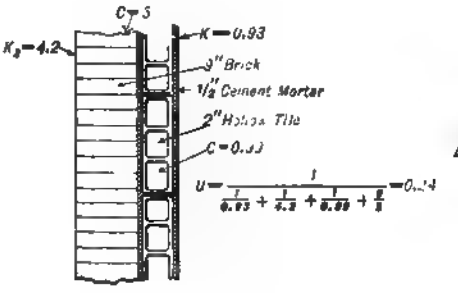

Fig. 7

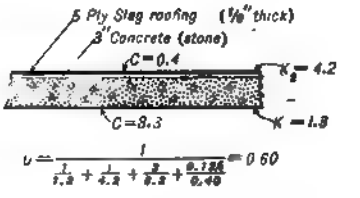

Fig. 8

TABLE 5

HEAT TRANSMISSION OF BUILDING CONSTRUCTION

BASED ON TESTS BY THE AUTHORS

TABLE

Construction	Thickness	B.t.u. transmitted per square foot per hour. Temperature difference 1°	20°	40°	60°	70°	80°
Plain Brick Wall. $K_1 = 1.40$ $K_2 = 4.20$ $C = 5.0$	9"	.363	7.3	14.5	21.8	25.4	29.0
	13"	.281	5.6	11.2	16.9	19.7	22.5
	18"	.220	4.4	8.8	13.2	15.4	17.6
	24"	.174	3.5	7.0	10.4	12.2	13.9
Brick Wall + Air Space, Furred and Plastered $K_1 = .93$ $K = 1.4$ $K_2 = 4.2$ $C_0 = 5$ $C_{al} = 8$	9"	.217	4.3	8.7	13.0	15.2	17.4
	13"	.185	3.7	7.4	11.1	13.0	14.8
	18"	.156	3.1	6.2	9.4	10.9	12.4
	24"	.132	2.6	5.3	7.9	9.2	10.6
Wood Wall or Floor 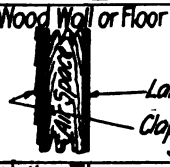		.20	4.0	8.0	12.0	14.0	16.0
Solid Wood	7"	.547	10.9	21.9	32.8	38.3	43.8
	1¾"	.370	7.4	14.8	22.2	25.9	29.6
	2⅝"	.279	5.6	11.2	16.7	19.5	22.3
Hollow Tile ½" Plaster on both sides $K_1 = .93$ $K_2 = 2.79$ C = 2"-.99, 4"-.61, 6"-.47	2"	.409	8.2	16.4	24.5	28.6	32.7
	4"	.325	6.5	13.0	19.5	22.8	26.0
	6"	.281	5.6	11.2	16.9	19.7	22.5
Concrete $K_1 = 1.30$ $K_2 = 3.90$ $C = 8.0$	2"	.784	15.7	31.4	47.0	54.9	62.7
	3"	.714	14.3	24.6	42.8	50.0	57.0
	4"	.655	13.1	26.2	39.3	45.9	52.4
	6"	.563	11.3	22.5	33.8	39.4	45.0
	For 3" concrete covered with slag roofing deduct approximately 10% from values stated						
Windows 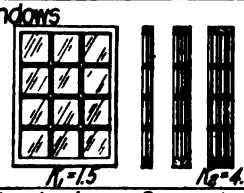 $K_1 = 1.5$ $K_2 = 4.5$	Single	1.126	22.5	45.0	67.6	78.8	90.0
	Double	.450	9.0	18.0	27.0	31.5	36.0
	Triple	.281	5.6	11.2	16.9	19.7	22.5
Infiltration Loss - B.t.u. per hour = cu. ft. {leaking in at 70°} × {.0.75 × .24 × $(t - t_0)$}							
1 Air change per hour. Temperature of outside air 0° F, inside air 70° F. - Cu. ft. ×		.018	.360	.720	1.08	1.26	1.44
p = perimeter of window in feet. B.t.u. loss per hour per degree diff. = p × .60 × 1.3 × 0.147 × .086 × 0.24 = 2.4 p	1/32" crack	1.2	24	48	72	84	96
	1/16" "	2.4	48	96	144	168	192
For 1/16" crack - Weather stripped sash - use ½ p	Note: For this method use perimeters of windows on one side of room only						
Carpenter's Rule for calculating heat loss of buildings:- B.t.u. per hr. = $(G + \frac{1}{4}W + .02NC)(t - t_0)$ W = wall surface; C = cubic contents; G = glass surface; N = number of air changes per hour.							

NOTE.—The volume of air leaking in is measured at a temperature of 70° F. These data are applicable to problems relating to the heating of buildings. See Volume I.

Single Glass Window.

$$K_1 = 1.5 \quad K_2 = 3 \times 1.5 = 4.5 \left(\frac{x}{c} \text{ may be neglected}\right)$$

$$u = \frac{1}{\frac{1}{1.5} + \frac{1}{4.5}} = 1.125.$$ For a 70° difference in temperature between the inside and outside the heat loss will be: $1.125 \times 70 = 78.8$ B.t.u. per sq. ft. per hour.

Other Types of Wall. The calculations for several other types of construction are shown by Figs. 3, 4, 5, 6, 7 and 8.

Heat Transmission of Air-Space Construction. Heat is transmitted through an air-space construction from one surface to another by radiation and convection.

The calculations for wall constructions which contain air spaces, as, for example, the wood-wall construction shown by Fig. 6, may be made as follows:

K_1 for the inside plastered wall surface = 0.93.
K for the inside surface of sheathing = 1.40.
K_2 for the outside wood clapboards = $3 \times 1.4 = 4.2$.
$C = 1$ for wood, $C = 8$ for plaster.
The total thickness of the wood is approximately 1.8″ (average). Thickness of plaster ½″.

$$u = \frac{1}{\frac{2}{0.93} + \frac{1}{1.4} + \frac{1}{4.2} + \frac{1.8}{1} + \frac{0.5}{8}} = 0.20.$$

Determination of the Heat Transmission of Building Construction by Experiment. Of the several laboratory methods that are used to determine the heat transmission of building construction, it is the opinion of the authors that the following is the most satisfactory and accurate:

A box is constructed (Fig. 9) of the material to be tested, inside of which is placed a resistance coil or bank of incandescent lamps, used as a heater, and a small disc fan to provide a circulation of the air in order to maintain a uniform inside temperature. The inside and outside air temperatures are measured in the usual manner. The temperature of the wall surfaces are most accurately determined by means of a thermocouple. The total heat introduced into the box is the sum of the heat equivalent of the watts supplied the resistance coil or lamps and the fan.

Let A_1 = current (amperes) supplied coil.
A_2 = current (amperes) supplied fan.
V_1 = voltage across terminals of coil.
V_2 = voltage across terminals of fan.
$W_1 = A_1V_1$ = watts supplied coil.
$W_2 = A_2V_2$ = watts supplied fan.
t = inside temperature of air in box, degs. F.
t_0 = outside temperature of air, degs. F.
u = heat transmission in B.t.u. per sq. ft., per hr., per deg. difference between inside and outside air temperatures.
S = mean heat transmitting surface of box in square feet.

1 watt hour = $\frac{33000 \times 60}{746 \times 778} = 3.415$ B.t.u. per hour, as 746 watt hours = 1 horsepower hour.

$$\therefore u = \frac{3.415\,(W_1 + W_2)}{S\,(t - t_0)}$$

NOTE.—The values of C and K for still air are readily determined if the temperatures of the surfaces are recorded.

It is not necessary to construct an entire box of the material to be tested each time. A standard box having once been thoroughly tested and the transmission factor u_1 accurately de-

termined, one side is removed and the new material, for which the heat transmission factor is desired, substituted. The difference between the calculated amount of heat that would have been required for five sides of the original test box and the actual heat input for the box with

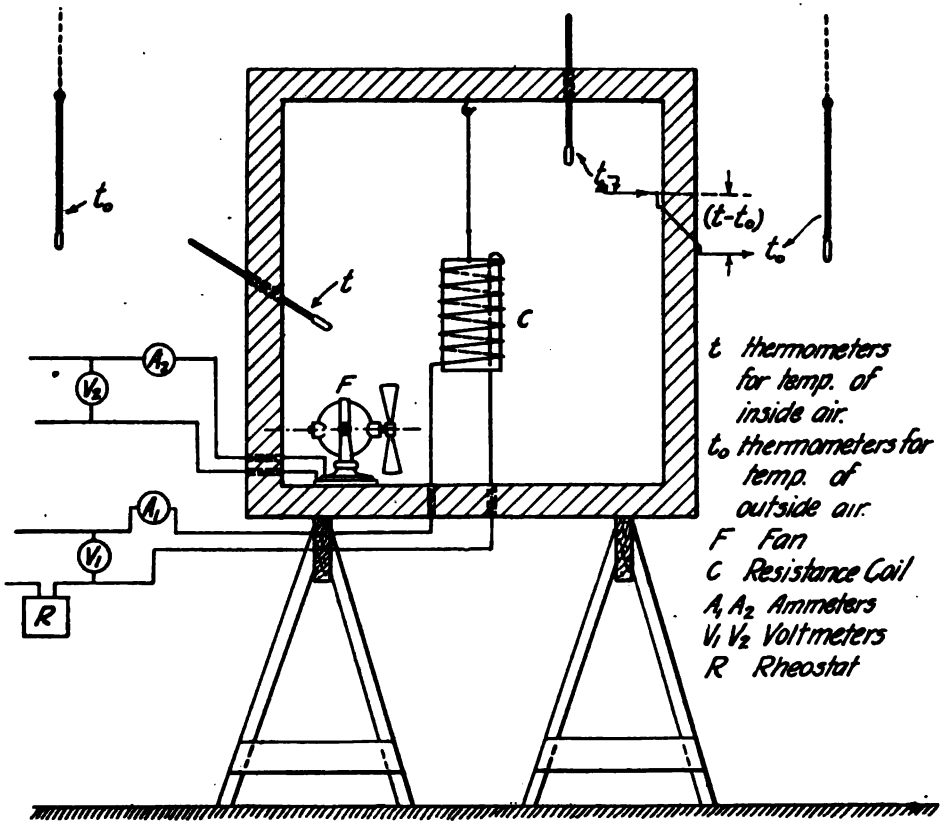

FIG. 9. TRANSMISSION TESTS OF BUILDING MATERIALS.

the substituted side gives the total heat transmission of the new material. This quantity divided by the product of the area of the substituted side and the temperature difference gives the heat transmission factor u_x of the material in question, as shown by the following calculation:

$$S = 6\,A, \qquad W = W_1 + W_2 = \text{watts to coil and fan.}$$

$$3.415\,W = (t - t_0)\,(5\,A\,u_1 + A\,u_x),$$

$$u_x = \frac{3.415\,W - 5\,A\,u_1\,(t - t_0)}{A\,(t - t_0)}$$

where A = area of one side in sq. ft.

CONSTRUCTION DETAILS OF COLD STORAGE INSULATION

The details (Figs. 10 to 19) and accompanying specifications covering the installation of cold storage insulation apply particularly to corkboard insulation, but may be used for waterproofed mineral wool board. The standard size of the corkboard sheets is 12″ x 36″.

The two types of insulation, above mentioned, are at present used to the practical exclusion of all others in modern plants.

Walls. Brick, stone, concrete or hollow tile, 4-inch insulation—two layers directly against the walls (Fig. 10), one course of 2-inch corkboard (all cork) shall be erected on a ½-inch bed of Portland cement mortar, mixed in the proportion of one part of Portland cement to two parts of clean,

TABLE 6

HEAT TRANSMISSION COEFFICIENTS FOR INSULATED WALLS

Construction	Wall Thickness	B.t.u. Transmitted per Square Foot per 24 Hours per Degree Difference in Air Temperature — Thickness of Corkboard Insulation				
		1"	2"	3"	4"	5"
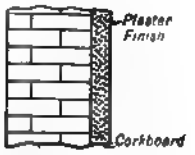 Brick Wall	8½" 13 17 22	3.37 3.38 3.04 2.70	2.57 2.35 2.18 2.00	1.98 1.80 1.70 1.59	1.54 1.46 1.39 1.31	1.28 1.22 1.18 1.12
Concrete	8" 4 6	4.92 4.80 4.58	3.90 3.95 3.97	2.16 2.13 2.09	1.68 1.67 1.64	1.38 1.37 1.35
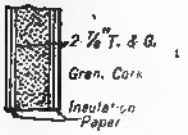		Granulated Cork				
		4"	6"	8"	10"	12"
		1.47	1.09	0.86	0.72	0.61
	Wall	Number of Air Spaces				
		1	2	3	4	
Brick Wall, Boards and Air Spaces	8½" 13 17 22	3.95 3.44 3.06 2.73	2.52 2.31 2.14 1.97	1.55 1.73 1.64 1.53	1.47 1.39 1.33 1.26	
	Tile	Corkboard				
		1"	2"	3"	4"	5"
	2" 4 6	4.26 3.84 3.56	2.74 2.56 2.43	2.02 1.92 1.85	1.60 1.54 1.49	1.32 1.28 1.25

sharp sand, all vertical joints being broken. A second course of 2-inch corkboard shall then be erected against the first in a ½-inch bed of Portland cement mortar, and additionally secured to the first with galvanized wire nails. All joints in the second course shall be broken with re-

spect to all joints in the first course. All joints shall be made tight. A Portland cement plaster finish shall be applied.

TABLE 7

RECOMMENDED PRACTICE FOR DESIGNING COLD STORAGE WALLS

Outside temperature assumed, 85° to 95° Fahr.

Inside Temperature, Fahr.	B.t.u. Transmitted per Square Foot per Degree Difference in Temperature 24 Hours	Tons of Refrigeration Required for 1000 Square Feet 24 Hours
−10° to +5°	1	0.32 to 0.28
5° to 20°	1.25	.35 to .28
20° to 32°	1.50	.34 to .27
32° to 45°	2.00	.37 to .27
45° and above	3.00	.41

NOTE.—It is frequently desirable to score the surface, marking it off in 3- or 4-foot squares. Whatever cracking there is then takes place in the score marks, and hence is bound to crack to a certain extent, but this does not affect the efficiency of the insulation in the slightest. After the plaster has thoroughly dried out, all cracks may be filled up with neat cement, and the plaster then given one or two coats of cold water paint or white enamel.

Against the exposed surface of the corkboard, a Portland cement plaster finish, approximately ½-inch in thickness, shall be applied in two coats. The first shall be approximately

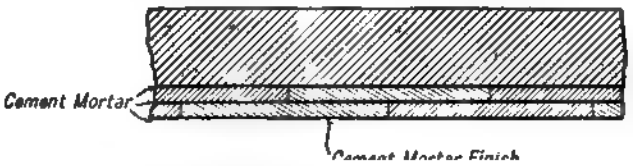

FIG. 10. INSULATION OF MASONRY WALLS

¼-inch in thickness, rough scratched, mixed in the proportion of one part Portland cement to two parts of clean, sharp sand. After this coat has thoroughly dried, the second coat shall be applied approximately ¼-inch in thickness, mixed in the proportion of one part of Portland cement to one and one-half parts of clean, sharp sand, and brought to a float or trowel finish, as may be desired. The plaster shall be kept wet by daily sprinkling for at least a week after the second coat is applied, in order to reduce cracking to a minimum.

This type of construction is approved by the National Board of Fire Underwriters.

NOTE.—The preceding specification may be used for any thickness erected in two layers.

Fig. 11 shows a method of insulating walls of frame construction. Methods used in insulating ceilings and floors are shown in Figs. 12 and 13, respectively.

Freezing Tanks (Fig. 14). *Bottom.* On a reasonably smooth and level concrete base, one course of 3-inch corkboard shall be laid down in hot asphalt, all transverse joints being broken. On the first course, a second course of 3-inch corkboard shall be laid down in hot asphalt. All

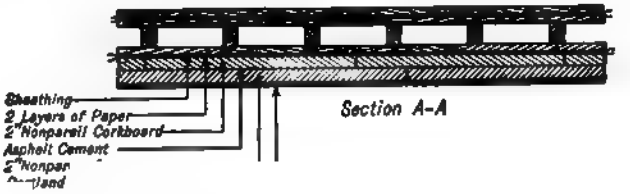

Section B-B

Elevation

FIG. 11. INSULATION OF FRAME WALLS

joints in the second course shall be broken with respect to all joints in the first course. All joints shall be made tight. The upper surface of the corkboard shall then be flooded with hot asphalt, approximately ½-inch thick, and left ready for the tank to be set down directly on top. The insulation shall extend at least 12 inches beyond the sides of the tank.

NOTE.—Experience has shown that heavy insulation on the bottom of freezing tanks will materially increase their output. Although some engineers specify only two layers of 2-inch corkboard for this purpose, 5 inches, *i.e.*, one layer of 2-inch and another of 3-inch; or preferably 6 inches, as above specified, should always be used.

Sides. Retaining walls of lumber shall be constructed so as to leave a space of 12 inches all around the four sides of the tank. Against the inside of the retaining walls shall be applied two layers of waterproof insulating paper, all edges lapped at least 3 inches. The paper shall then be covered with a second layer of ⅞-inch T. and G. boards nailed in place. The space between the walls and the tank shall be filled with granulated cork, well tamped in place. A curbing consisting of two courses of ⅞-inch T. and G. boards with waterproof insulating paper between shall then be installed so as to cover the space filled with granulated cork.

Practice has shown that 12 inches of granulated cork is the proper thickness to employ. If circumstances render it necessary, this may be reduced to 10 inches without serious harm. If the retaining walls are of brick, they should be waterproofed with hot asphalt.

Fig. 15 shows the construction of a freezing tank using corkboard insulation for the sides as well as the bottom.

Solid Cork Partitions. In cases where there is no load to be carried, solid cork partitions (Fig. 16), as high as fifteen feet are entirely satisfactory. They possess the necessary structural strength and save space and the cost of studding or tile.

A Portland cement finish is used on both sides of the partition.

A first-class job of corkboard insulation costs approximately 10 cents per board foot erected, exclusive of any wood that may be used in the construction.

Continuous Insulation. The desirability of making the insulation of the walls of a cold

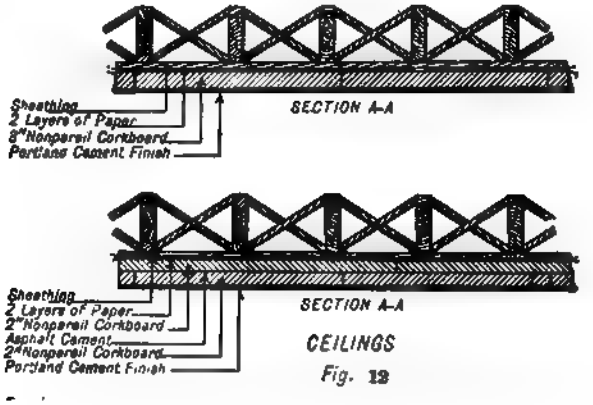

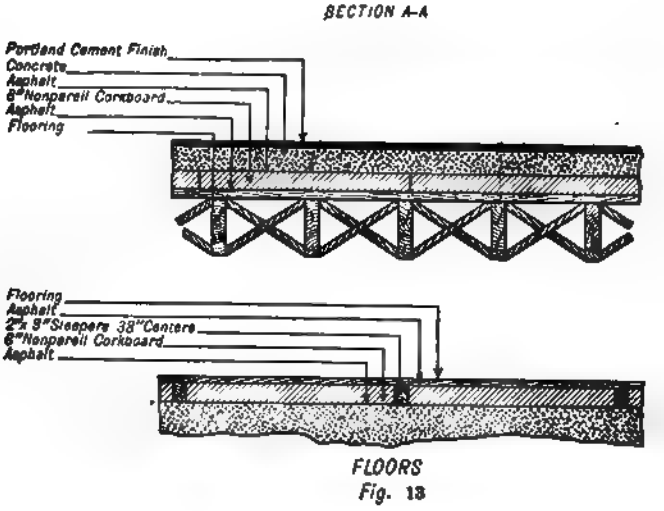

FIGS. 12 AND 13. INSULATION OF CEILINGS AND FLOORS

storage building continuous, *i.e.*, without breaks at the floor levels, is obvious (Fig. 17). In recent years, this object has been attained in a number of plants by building an interior structure of concrete and steel to carry the load of the building and its contents, and then casing it in with self-sustaining curtain walls, entirely independent of the interior structure, except for a few small

metal ties. The insulation, of course, is applied against the inner surface of the curtain walls in a continuous sheet from the basement to the roof line without breaks at the floor levels. The wall insulation in such cases is generally carried through the roof slab so as to connect with the roof insulation. In this way the building is literally enveloped with insulation and loss of re-

FIG. 14. FREEZING TANK INSULATION.

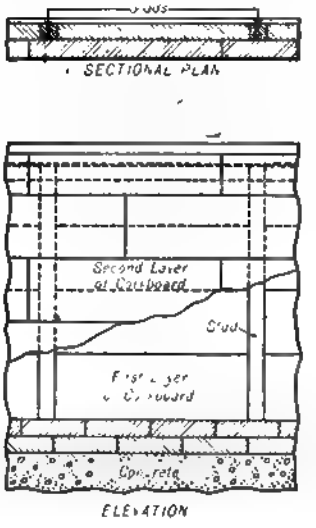

FIG. 15. FREEZING TANK INSULATION.

frigeration is reduced to a minimum. This method of construction has been utilised in almost all of the large cold storage warehouses erected within the past few years.

Insulation constructions, frequently employed, are shown in Figs. 18 and 19.

Example. Required the total amount of refrigeration for the following duty:

To cool down 50,000 lb. meat from 95° to 35° F. per 24 hours. Outside temperature 85° and 70 per cent humidity. Size of cold storage room 40′ x 60′ x 12′; ventilation, 10 air changes per 24 hours based on inside temperature. Walls of storage room 13″ brick. Roof 1½″ wood, large air space and 1″ ceiling. Floor construction 6″ concrete laid on cinder fill. Insulation on all walls, floor and ceiling 3″ corkboard. Temperature of ground assumed, 50° F.

Refrigerating Load.

(1) To cool the goods stored.

$SW\ (t_1 - t) = 0.8 \times 50{,}000 \times (95 - 35) = 2{,}400{,}000$ B.t.u., 24 hours.

(2) *Heat Transmission.*

B.t.u. = area × transmission coefficient × temperature difference.

13″ brick wall + 3″ cork, 2400 sq. ft. × 1.80 × 50	= 216,000
6″ concrete floor + 3″ cork, 2400 sq. ft. × 2.09 × 15	= 75,240
1″ wood ceiling + 3″ cork, 2400 sq. ft. × 1.99 × 50	= 239,200
	530,440

(3) *Ventilation.*

40 × 60 × 12 × 10 = 288,000 cu. ft. air introduced every 24 hours. Weight of air = 288,000 × 0.08 (density 35°) = 23,040 lb. Weight of moisture per lb. of air, 85° F. and 70 per cent humidity is from the psychrometric chart (Chapter XIV) 0.026 × 0.70 = 0.0182. lb. vapor per lb. of air.

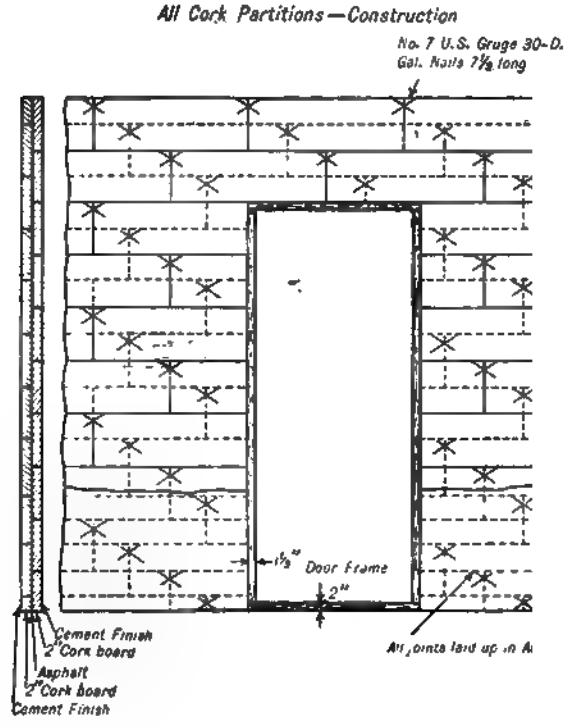

FIG. 16. TYPICAL CORKBOARD PARTITION.

FIG. 17. CONTINUOUS WALL INSULATION.

The air will be reduced to a saturated state at 35° on entering the room and will then carry 0.00424 lb. vapor per lb. of air. The weight condensed out will therefore be 0.0182 − 0.0042 = 0.014 lb. per lb. of air introduced. Latent heat of the vapor for 35° F. is 1072 (Steam tables).

To lower temperature of air, 23,040 × 0.24 (85 − 35)	= 276,480
To lower temperature of vapor 23,040 × 0.018 × 0.46 (85 − 35)	= 9,539
To condense out vapor, 23,040 × 0.014 × 1072	= 345,784
	631,903

In addition to the above the precipitated moisture is deposited on the cooling coils and will be frozen. The temperature of the coils will be approximately 10° lower than the room tem-

FIG. 18. TYPICAL APPLICATIONS OF INSULATION CONSTRUCTION.

perature or 35 − 10 = 25° F. To lower the temperature of 1 lb. moisture from 35° to 32° F. requires 3 B.t.u.; to freeze, 144 B.t.u.; and to lower the temperature of the ice so formed from 32° to 25° F.

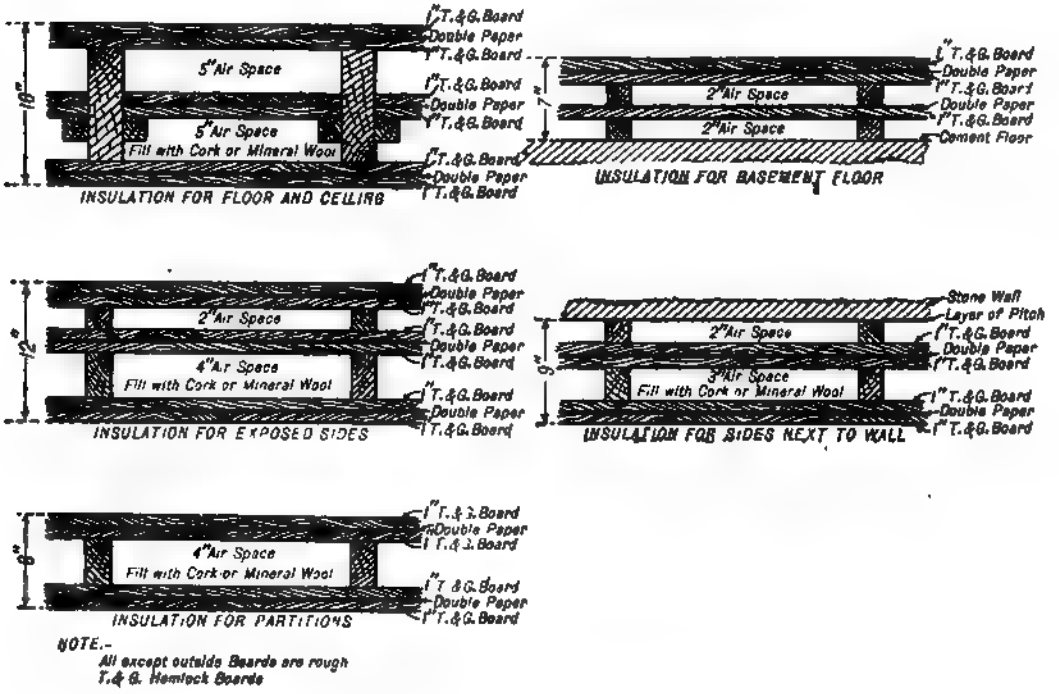

FIG. 19. BOARDS AND AIR SPACE CONSTRUCTION.

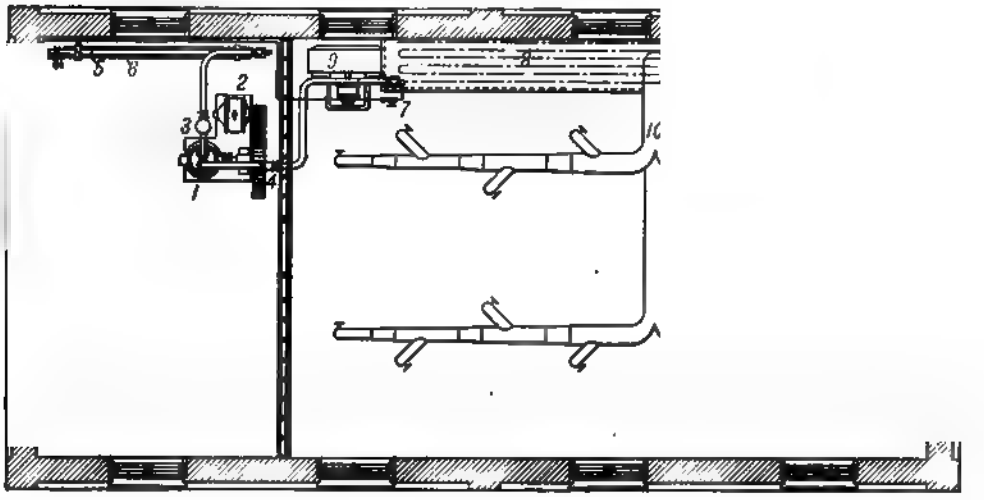

1.—Refrigerating Machine. 2.—Motor. 5.—Ammonia Condenser. 8.—Cooling Coil. 9.—Fan. 10.—Duct System.

FIG. 20. COLD AIR CIRCULATION REFRIGERATING SYSTEM.

or 0.5 (32 − 25) = 3.5, which gives a total of 3 + 144 + 3.5 or 150.5 B.t.u. per lb. Then 23,040 × 0.014 × 150.5 = 48,545 B.t.u.

The total B.t.u. to be extracted on account of ventilation is 631,803 + 48,545 or 680,348 B.t.u. For future reference a fair allowance for ventilation may be considered as follows:

$$\frac{680{,}348}{10 \times 28{,}800} = 2.2 \textit{ B.t.u. per cu. ft. of space per air change per 24 hrs.}$$

The total refrigeration required will therefore be:

(1) To cool the goods stored	= 2,400,000
(2) Heat transmission	= 530,440
(3) For ventilation	= 680,348
	288,000/3,610,788
Tons of refrigeration	12.5

Assuming that each beef weighs 700 lb., then $\frac{50{,}000}{700} = 72$ beeves stored per 24 hours, or $\frac{72}{12.5} = 6$ beeves per ton of refrigeration (approximate).

Forced Air Circulation System. This method of refrigeration is similar to the hot blast system of heating. A fan is used to recirculate the air over the cooling coils which are located in a small chamber termed a "cooler," the air being piped from the cooler to the various cold storage rooms and a return duct being installed to carry the return air from the rooms to the fan.

This system of cooling has the advantage of centering the brine or ammonia piping. The moisture precipitation all taking place in the cooler, the rooms are dry and free from the moisture drip of cooling coils. The disadvantages of this system are the increased cost of operation and the space occupied by the air-ducts.

Fig. 20 serves to illustrate the manner in which the system is installed.

Example. If a forced air circulating system is to be used for the previous example, allowing a 15° drop in temperature for the air passing through the room (leaves cooler 20° and returns at 35°), the fan must handle per minute

$$\frac{3{,}610{,}788}{0.24 \times 15 \times 60 \times 24} = 697 \text{ lb. of air or } \frac{697}{0.08} = 8710 \text{ cu. ft. per min.}$$

If the velocity through the free area of the cooling pipes or coils and through the air ducts is kept down to a reasonable figure, say 1500 ft. per minute, the total pressure rating of the fan should not exceed 1", in which event will require a steel plate fan with 42" wheel, 475 r.p.m. and 4.58 d.hp.; 10,020 cu. ft. per min. or a multi-blade fan 36" diameter, 300 r.p.m., and 3.3 d.hp., 11,060 cu. ft. per min. See Fan Diagrams, Chap. VIII on "Mechanical Draft."

One hp. = 2546 B.t.u. per hour. As the equivalent of the power required to move the air is introduced directly in the circulation, then $\frac{3.3 \times 2546 \times 24}{288{,}000} = 0.70$ ton of refrigeration must be added to the amount previously calculated. Total is 12.5 + 0.70 = 13.2 tons.

SMALL REFRIGERATORS

Refrigerator Tests. The following tests were conducted under the direction of one of the authors on three well-known makes of refrigerators in order to determine the heat transmission of the walls. The figures given are an average of several test runs made in still air, the boxes being empty and with doors made tight with felt and kept closed during the test. The boxes were first cooled down to constant temperature conditions before the tests were started.

TABLE 8

	A	B	C
External area, square feet	32.9	29.6	28.4
Length of test, hours	12.15	12.35	12.20
Average inside temperature, degrees F.	59.	55.	55.7
Average outside temperature, degrees F.	80.2	80.7	80.5
Pounds of ice melted	10.8	10.5	11.6
B.t.u. transmission per square foot per degree difference in outside and inside temperature in 24 hours	3.67	3.86	4.61

Refrigeration Required for Small Boxes and Rooms. In large rooms the losses may be analyzed with some degree of certainty when the conditions of operation are known.

FIG. 21. SECTION THROUGH COLD STORAGE ROOM FOR HOTEL PLANT.

For small refrigerators, as in hotels, kitchens, private homes, etc., the following data, as employed by one builder of small machines, may be used and will give better results than a more elaborate analysis. In applying the following data a refrigerator temperature of approximately 45° F., is assumed; and an average summer temperature of 72° F.

An allowance of from 200 to 225 B.t.u. is made per pound of ice.

For pantry and kitchen refrigerators use outside dimensions in figuring volumes.

TABLE 9

HEAT LOSS FROM REFRIGERATORS

Type	B.t.u. per Cu. Ft. per 24 Hours
Pantry refrigerator	300
Kitchen refrigerator	600 to 900
Butchers display refrigerators	200 to 250
Long storage	150 to 200

Each linear foot of insulated brine pipe requires roughly as much refrigeration as one cu. ft. of the box and should be added to the volume of box to obtain the total requirement.

The approximate refrigeration required for large boxes and rooms may be obtained from the

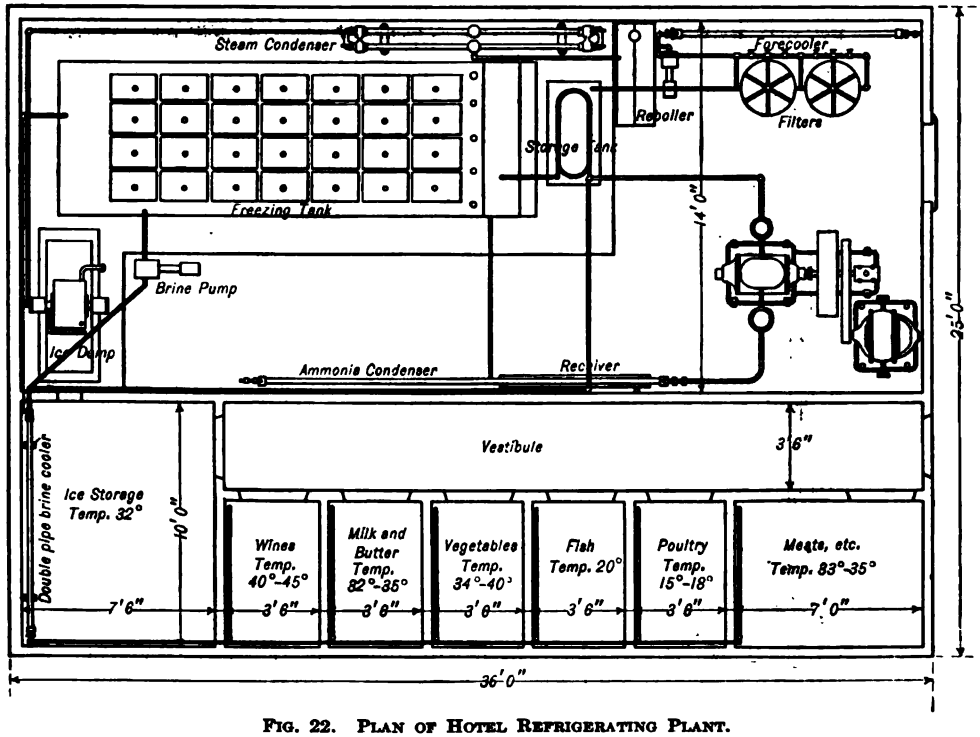

FIG. 22. PLAN OF HOTEL REFRIGERATING PLANT.

data given by Table 3, Chapter XXIII. The pipe or coil surface necessary is also given by the same table.

Example. Required the amount of refrigeration and brine pipe surface for a pantry refrigerator, size, 4′ × 2′ × 6′, average inside temperature, 45° F., average brine temperature in cooling pipes, 20° F. Allow for 50 ft. of insulated brine pipe. Total cu. ft., (4 × 2 × 6) + 50 = 98.

$$\text{Tons of refrigeration, 24 hrs.} = \frac{300 \times 98}{288{,}000} = 0.102.$$

Fig. 23. Elevation of Small Cold-Storage Room.

Fig. 24. Plan of Small Cold-Storage Room.

This is equivalent to $0.102 \times 12{,}000 = 1224$ B.t.u. per hour. For a coefficient of heat transmission $K = 2$ (see data, Table 2, Chapter XXHI). The amount of pipe surface required is:

$$S = \frac{300 \times 48}{24 \times 2\ (45 - 20)} = 12 \text{ sq. ft.}$$

Use 24 linear ft. of 1″ pipe.

Refrigerator Prices. Prices are for boxes *not* including plumbing.

In all cases cooling surfaces located in top of box.

Exposed exterior finish is white ash or oak, inside finish $^{7}/_{16}$″ opalite glass and vitrified tile floor with aluminum rod shelving.

Walls—2″ of sheet cork, three thicknesses of boards with waterproof paper between all courses, $^{7}/_{16}$″ opalite glass; total wall thickness, $5\frac{1}{2}$″.

Instructions for Estimating. 1. Decide size of refrigerator, allowing about two feet in top of box for cooling surface (from ¼ to ⅓ of total height).

2. Calculate total outside surface in square feet, including top, bottom and four sides.

3. Selling price of refrigerator per square foot of outside surface, $2.45.

4. For *extra* doors add ten dollars each (see following table for usual number of doors).

TABLE 10

Outside Surface of Refrigerator in Square Feet	Usual Number of Doors in Box Including Door in Coil Space	Average Time Required to Erect in Days
40– 65	2–3	1
65– 90	3–4	3
90–117	4–6	3
117–158	4–6	4–6
158–200	4–6	6

Prices on refrigerators of design indicated above are based on furnishing one door. For additional doors the full height, add thirty dollars; for half height, fifteen dollars.

Baffle plate in front of coils is removable.

Shelving may be arranged to suit the requirements. Allow 9″ on back wall of box for coil space and baffle plate in boxes up to 3′ deep; allow 12″ for boxes up to 6′ deep.

CHAPTER XXIII

HEAT TRANSMISSION OF PIPING AS USED IN REFRIGERATION PRACTICE

The coefficient of heat transmission K (B.t.u. transmitted per sq. ft. per degree difference in temperature per hour) varies with the velocity of the gas or liquid in contact with the surfaces.

Heat Transmission of Double-Pipe Ammonia Condensers. The following formula, derived from experimental results, is reported in the "Transactions" of the *American Society of Refrigerating Engineers* for 1907.

$$K = 130\sqrt{w_w}$$

in which w_w is the velocity of the water over the pipe surface in ft. per sec.

Let Q = heat transmitted per hour B.t.u.
S = square feet of surface.
$Q = K \times S \times$ mean temperature difference (Δt). See Table 1.
t_1 = initial temperature cooling water.
t_2 = final temperature cooling water.
t_3 = initial temperature of NH_3 gas.
t_4 = final temperature of NH_3 liquid.

Brine Cooler. For double pipe brine coolers the value of K is given by: $K = 84\,w_b$ in which w_b is the velocity of the brine through the pipe, ft. per sec.

$$Q = K \times S \times \Delta t.$$

$$\Delta t = \frac{t_1 + t_2}{2} - t_o.$$

t_1 = temperature of entering brine.
t_2 = temperature of leaving brine.
t_o = temperature of gas maintained in the evaporating coil.

The following tables (*York Mfg. Co.*) give the heat transmission obtained with circulating water and brine at different velocities:

1¼" and 2" Double Pipe Ammonia Condensers

Velocity of Water in Coil, Ft. per Minute	100	150	200	250	300	400
B.t.u. Hr. Sq. Ft. 1° F. Mean Diff. Temp.	150	198	240	260	300	338

2" and 3" Double Pipe Brine Coolers

Velocity of Brine in Coil, Ft. per Min.	100	150	200	250	300	400	500	600	700	800
B.t.u. Hr. Sq. Ft. 1° F. Mean Diff. Temp.	95	112	130	145	158	177	191	205	215	220

While the above conditions were obtained in tests, in every-day practice the manufacturers figure about 30 to 40 per cent less transmission than shown by the above tables.

The surface in ammonia condensers is obtained by the *York Mfg. Co.*, as follows:

$$\text{Sq. Ft.} = \frac{H \times A + [A \times C(t - t_1)]}{K \times (t_1 - t_2)} \text{ in which}$$

H = heat of vaporization at condensing pressure.
A = pounds NH_3 circulated per minute per ton refrigeration.
C = specific heat of vapor.
t = temperature of gas entering condenser.
t_1 = temperature due to condensing pressure.
t_2 = mean temperature of water on and off condenser.
K = heat transmission per minute per sq. ft. per 1° F. mean difference in temperature.

Heat Transmitted from Liquid to Liquid. The following formula, by *Hausbrand*, is given by *Prof. Greene* in his treatise, "Heat Engineering":

$$K = \frac{60}{\frac{1}{1 + 3.33\sqrt{w_1}} + \frac{1}{1 + 3.33\sqrt{w_2}}}$$

in which w_1 and w_2 are the velocities in ft. per sec. on opposite sides of the pipe surface.

If $w_1 = w_2$, then

$$K = 30\,(1 + 3.33\sqrt{w})$$

$$Q = K \times S \times \Delta t$$

in which Δt is the mean temperature difference between the two liquids.

The above formula is applicable to the "heat exchanger" as used in the absorption system.

Mean Temperature Difference. The mean temperature, Δt difference between two liquids, or between steam or air and a liquid which alter their temperatures during an exchange of heat, may be determined by means of the constants given by *E. Hausbrand*, Table 1, following:

Let D_s = the smallest temperature difference.

D_a = the greatest temperature difference.

$\frac{D_s}{D_a}$ = ratio of smallest to greatest difference (See Column 1).

M = Constant. Col. 2.

Then $\Delta t = M \times D_a$.

TABLE 1

MEAN TEMPERATURE DIFFERENCE

1	2	1	2	1	2	1	2
$\frac{D_s}{D_a}$	Mean Temperature Difference $\frac{\Delta t}{D_a = 1}$	$\frac{D_s}{D_a}$	Mean Temperature Difference $\frac{\Delta t}{D_a = 1}$	$\frac{D_s}{D_a}$	Mean Temperature Difference $\frac{\Delta t}{D_a = 1}$	$\frac{D_s}{D_a}$	Mean Temperature Difference $\frac{\Delta t}{D_a = 1}$
0.0025	0.166	0.10	0.391	0.21	0.509	0.55	0.756
.005	.189	.11	.405	.22	.518	.60	.786
.01	.215	.12	.418	.23	.526	.65	.815
.02	.251	.13	.430	.24	.535	.70	.843
.03	.277	.14	.440	.25	.544	.75	.872
.04	.298	.15	.451	.30	.583	.80	.897
.05	.317	.16	.461	.35	.624	.85	.921
.06	.335	.17	.466	.40	.658	.90	.953
.07	.352	.18	.478	.45	.693	.95	.982
.08	.368	.19	.489	.50	.724	1.00	1.000
.09	.378	.20	.500				

Heat Transmitted from Steam to Water which is Boiling. The following formula, from the experiments of *Jelinck*, is given by *Prof. Greene:*

$$K = \frac{953}{\sqrt{d \times l}}$$

in which d is the diameter of the pipe or tube in feet and l the total length of pipe in feet.

Heat Transfer in Room Piping. The diagram, Fig. 1, shows the rate of heat transfer per degree difference in temperature between ammonia or brine and air which is circulated by gravity in cold-storage rooms.

These values are to be applied to room piping fairly free from frost. This diagram was taken from an article, by *C. H. Herter*, "Refrigerating World," October, 1915.

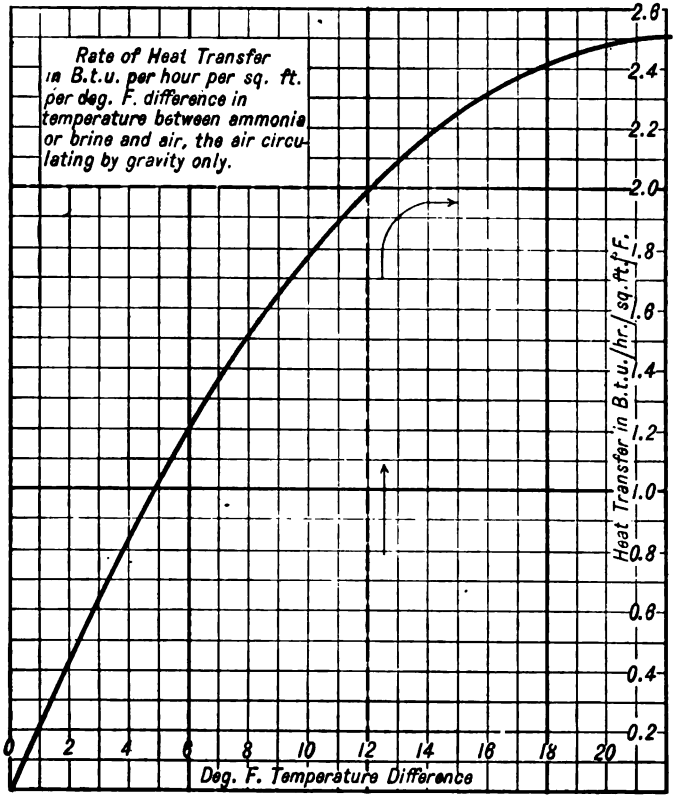

FIG. 1.

The following table is quoted mainly from a table by *O. Gueth*, in "The Refrigerating Engineer's Manual," and presumably represents the practice of various manufacturers of refrigerating machinery:

TABLE 2

COEFFICIENT OF HEAT TRANSMISSION "K" FOR WROUGHT IRON OR STEEL PIPE

B.t.u. transmitted per sq. ft. per hour per degree difference in temperature

Conditions	B.t.u.
Ammonia gas inside, water outside. Submerged condenser	50
Ammonia gas inside, running water outside. Atmospheric condenser	60
Ammonia gas inside, brine outside. Brine tank	25
Ammonia gas inside, air outside. Direct expansion piping	3.5
Cold brine inside, water outside. Water cooler	80
Ammonia liquor inside, water outside. Absorber	60
Ammonia liquor inside and outside. Heat exchanger	50
Steam inside, water outside counter current steam condenser	500
Steam inside, water or ammonia liquor outside. Ammonia generator or still	300
Steam inside, air outside	2
Brine inside, air outside. Brine piping, black pipe	3½
Brine inside, air outside. Brine piping, frosted pipe	2

TABLE 3

HEAT LOSSES THROUGH PIPE COVERING FOR WATER AND BRINE LINES

Transmission in B.t.u. per 24 hours per linear foot for one degree temperature difference between inside and outside

Size of Pipe	Outside Diameter of Pipe	Bare Pipe B.t.u.	Std. Ice Water Thick.		Std. Brine Thick.	
			O. D.	B.t.u.	O. D.	B.t.u.
⅜	0.675″	7.65	3.25″	2.93	4.25″	2.50
½	0.840″	9.50	3.25″	3.41	4.25″	2.83
¾	1.050″	11.88	3.75″	3.61	4.75″	3.05
1	1.315″	14.81	4.25″	3.90	5.31″	3.28
1¼	1.660″	18.77	4.62″	4.50	6.31″	3.43
1½	1.900″	21.49	4.75″	5.01	6.90″	3.60
2	2.375″	26.80	5.31″	5.68	7.25″	4.10
2½	2.875″	32.46	5.62″	6.82	7.87″	4.57
3	3.500″	39.58	6.62″	7.22	8.87″	4.95

Note.—The above table was calculated by proportion from pipe covering tests made by the *Armstrong Cork Co.* Calculations are based on the following formula:

$$Q = \frac{2\pi K(\beta_2 - \beta_1)}{\text{Log}\,\frac{r_2}{r_1}}\,t$$

Where

r_2 = outside radius of covering.
r_1 = inside radius of covering.
β_2 and β_1 = temperatures of the two surfaces.
Q = quantity of heat transferred in the time t.
K = the conductivity of the material.

Tonnage and Amount of Pipe Required for General Cold Storage Rooms. When it is not possible to calculate the amount of refrigeration, owing to the varied nature of the goods stored, etc., the allowance made for various size rooms as given by the table following, taken from a machine builder's catalogue, may be used:

TABLE 4

TONNAGE AND PIPING TABLES

Cubic Space in Box or Room	Temperature 40° Fahr.							Temperature 30° Fahr.						
	Cu. Ft. Per Ton Refrigeration	Cu. Ft. to 1 Ft. Pipe						Cu. Ft. Per Ton Refrigeration	Cu. Ft. to 1 Ft. Pipe					
		Direct Expansion			Brine				Direct Expansion			Brine		
		1″	1¼″	2″	1″	1¼″	2″		1″	1¼″	2″	1″	1¼″	2″
12	150	3.	5.0	....	2.5	4.	....	130	2.3	3.5	....	2.	2.8	....
20	185	3.1	5.1	....	2.6	4.1	....	159	2.4	3.6	....	2.	2.9	....
50	225	3.2	5.2	....	2.7	4.2	....	200	2.5	3.7	....	2.1	3.	....
100	300	3.4	5.5	....	2.8	4.4	....	260	2.7	3.9	....	2.2	3.1	....
250	500	...	6.3	....	...	4.8	....	430	...	4.5	....	...	3.4	....
500	850	...	7.5	....	...	5.6	....	710	...	5.4	....	...	4.	....
1,000	1,200	...	8.7	....	...	6.4	9.5	1,000	...	6.5	....	...	4.5	7.
3,000	1,600	...	10.	....	...	7.3	11.	1,300	...	7.5	10.	...	5.	8.
5,000	2,300	...	12.	18.	...	9.	14.	1,900	...	9.0	12.	...	6.	9.
10,000	3,000	...	15.	22.	...	11.	16.	2,600	...	11.	15.	...	7.	11.
20,000	3,700	...	18.	26.	...	12.	18.	3,100	...	13.	17.	...	8.	12.
40,000	4,500	...	20.	30.	...	14.	21.	3,700	...	15.	20.	...	10.	14.
70,000	5,800	...	25.	37.	...	17.	25.	4,800	...	18.	24.	...	12.	17.
100,000	7,200	...	30.	45.	...	20.	30.	6,000	...	20.	28.	...	14.	20.
	Mean Temperature Ammonia Expansion 0° Fahr. Brine in Coils 15° Fahr.							Mean Temperature Ammonia Expansion 0° Fahr. Brine in Coils 15° Fahr.						

TABLE 4.—*Continued*

Cubic Space in Box or Room	Temperature 20° Fahr.							Temperature 10° Fahr.						
	Cu. Ft. Per Ton Refrigeration	Cu. Ft. to 1 Ft. Pipe						Cu. Ft. Per Ton Refrigeration	Cu. Ft. to 1 Ft. Pipe					
		Direct Expansion			Brine				Direct Expansion			Brine		
		1″	1¼″	2″	1″	1¼″	2″		1″	1¼″	2″	1″	1¼″	2″
12	113	1.6	2.2	....	1.4	2.	....	93	1.	1.2	....	0.6	1.1	....
20	137	1.7	2.3	....	1.4	2.	....	112	1.	1.2	....	0.6	1.1	....
50	160	1.8	2.4	....	1.5	2.1	....	130	1.1	1.2	....	0.6	1.1	....
100	205	2.0	2.6	....	1.6	2.2	....	168	1.2	1.3	....	0.6	1.2	....
250	348	...	2.8	....	...	2.4	....	280	...	1.4	....	...	1.3	....
1,000	580	...	3.2	....	...	2.7	....	470	...	1.6	2.5	...	1.5	....
3,000	820	...	3.8	5.5	...	3.0	4.	650	...	2.2	3.	...	1.7	2.3
5,000	1,100	...	4.5	6.5	...	3.4	4.5	840	...	2.5	3.6	...	1.9	2.6
10,000	1,600	...	6.	8.	...	4.0	5.5	1,140	...	3.2	4.6	...	2.2	3.3
20,000	2,100	...	7.	10.	...	4.7	6.5	1,600	...	4.	5.7	...	2.6	4.0
40,000	2,600	...	8.	12.	...	5.5	7.5	2,100	...	4.8	6.8	...	3.	4.7
70,000	3,200	...	9.	14.	...	6.5	8.5	2,600	...	5.5	8.	...	3.5	5.5
100,000	4,000	...	11.	17.	...	7.5	10.	3,100	...	6.5	10.	...	4.2	6.7
	4,900	...	14.	20.	...	9.	12.	3,800	...	8.	12.	...	5.	8.
	Mean Temperature Ammonia Expansion 0° Fahr. Brine in Coils 10° Fahr.							Mean Temperature Ammonia Expansion 0° Fahr. Brine in Coils 5° Fahr.						

The above tables are based on continuous operation, 24 hours per day.

When ammonia is being expanded only half of the time, submerge a like quantity of pipe in the brine pan and double the tonnage.

The following table is given by *F. W. Wolf, Jr.*:

TABLE 5

Size of Butchers' Box		Ammonia Compressor			Tons Ref. Capacity	Starting Load H. P.	Operating Load H. P.	Daily Max.		Maximum Monthly Bill
Cubic Feet	Size	Type	Size	Speed				Hrs. Run	Cost of Power	
	Inches		Inches							
800	9x10x9	Single	4½ x 6	100	1–2	3	2	9	$ .27	$7.25
1,000	10x12x9	Single	4½ x 6	100	1–2	3	2	12	.36	9.36
800	9x10x9	Single	4½ x 6	200	3–4	5	4	5	.30	7.80
1,000	10x12x9	Single	4½ x 6	200	3–4	5	4	6	.36	9.36
1,500	10x16x9	Single	4½ x 6	200	3–4	5	4	9	.54	14.00
1,800	10x20x9	Single	4½ x 6	200	3–4	5	4	10	.60	15.50
2,000	10x22x9	Single	4½ x 6	200	3–4	5	4	12	.72	18.75
2,000	10x22x9	Twin	4½ x 6	200	6–8	10	7½	6	.65	17.50
3,000	15x22x9	Twin	4½ x 6	200	6–8	10	7½	9	1.00	25.00
4,000	20x22x9	Twin	4½ x 6	200	6–8	10	7½	12	1.35	35.00
5,000	11x50x9	Twin	4½ x 6	200	6–8	10	7½	15	1.75	45.00

CHAPTER XXIV

METHODS OF PRODUCING ARTIFICIAL REFRIGERATION

General. The production of what is commonly understood as low temperature may be brought about by a comparatively rapid absorption of heat by certain substances during either a chemical or a physical change of state.

Chemical Change of State. A chemical change implies the rearrangement of the atoms into new molecules. It is a well-known fact that any chemical change requires and is accompanied by a heat transfer.

TABLE 1

PRINCIPAL FREEZING MIXTURES

Composition of Freezing Mixtures	Reduction of Temperature in Degrees Fahr.		Amount of Fall in Degrees Fahr.
	From	To	
Snow or pounded ice, 2 parts; muriate of soda 1 part	....	− 5	..
Snow 5; muriate of sodium 2; muriate of ammonia, 1	....	−12	..
Snow 24; muriate of sodium 10; muriate of ammonia 5; nitrate of potash 5	....	−18	..
Snow 12; muriate of sodium 5; nitrate of ammonia 5	....	−25	..
Snow 4; muriate of lime 5	+32	−40	72
Snow 1; chloride of sodium or common salt 1	+32	0	32
Snow 2; muriate of lime crystallised 3	+32	−50	82
Snow 3; dilute sulphuric acid 2	+32	−23	55
Snow 3; hydrochloric acid 5	+32	−27	59
Snow 7; dilute nitric acid 4	+32	−30	62
Snow 8; chloride of calcium 5	+32	−40	72
Snow 2; chloride of calcium crystallised 3	+32	−50	82
Snow 8; potassium 4	+32	−51	83
Snow 2; chloride of sodium 1	....	− 5	..
Snow 5; chloride of sodium 2; chloride of ammonia 1	....	−12	..
Snow 14; chloride of sodium 10; chloride of ammonia 5; nitrate of potassium 5	....	−18	..
Snow 12; chloride of sodium 5; nitrate of ammonia 5	....	−25	..
Snow 2; dilute sulphuric acid 1; dilute nitric acid 1	−10	−56	46
Snow 12; common salt 5; nitrate of ammonia 5	−18	−25	7
Snow 1; muriate of lime 3	−40	−73	33
Snow 8; dilute sulphuric acid 10	−68	−91	23
Chloride of ammonia 5; nitrate of potassium 5; water 16	+50	+ 4	46
Nitrate of ammonia 1; water 1	+50	+ 4	46
Chloride of ammonia 5; nitrate of potassium 5; sulphate of sodium 8; water 16	+50	+ 4	46
Sulphate of sodium 5; dilute sulphuric acid 4	+50	+ 3	47
Sulphate of sodium 8; hydrochloric acid 9	+50	− 0	50
Nitrate of sodium 3; dilute nitric acid 2	+50	− 3	53
Nitrate of ammonia 1; carbonate of sodium 1; water 1	+50	− 7	57
Sulphate of sodium 6; chloride of ammonia, 4; nitrate of potassium 2; dilute nitric acid 4	+50	−10	60
Phosphate of sodium 9; dilute nitric acid 4	+50	−12	62
Sulphate of sodium 6; nitrate of ammonia 5; dilute nitric acid 4	+50	−14	64

The tendency of certain salts in combination with water, acids, or ice to pass into a liquid state is so great that energy, in the form of heat, required for the change cannot all be transferred to the mixture from the outside, and the deficiency is supplied by the heat of the mixture itself. The result is a lowering of temperature of the mixture, that is, the production of artificial cold or refrigeration.

The salts used in the so-called freezing mixtures are those of alkalies which possess the property of solubility at comparatively low temperatures. This process of refrigeration, brought about by a chemical change in the present state of the art, is not commercially successful on account of the abnormal expenditure of energy required to change the state of the resultant mixture back to its original constituent parts. A continuous cycle of operation is imperative on account of the high cost of the materials employed.

The most common form of freezing mixture employed is that of ice and sodium chloride (common salt).

Table 1 gives a number of freezing mixtures with accompanying temperature reduction.

Physical Change of State. Artificial refrigeration is produced on a commercial scale by apparatus working a substance through a physical change of state only by a mechanical process.

The following systems are at present in use: A discussion of the operation of each follow in the order given:

(1) Cold air compression machines, medium used—air.

(2) Compression machines, medium used—volatile liquids (NH_3; SO_2; CO_2; etc.).

(3) Vacuum machines, medium used—water vapor.

(4) Absorption machines, medium used—ammonia.

CHAPTER XXV

COLD AIR MACHINES

General. The principle of operation of the cold air machine is based on the first law of thermodynamics. Heat and mechanical energy being mutually convertible, it follows, that if a compressed gas or air is cut off from the source of supply, and is allowed to expand in a cylinder by moving a piston and thus performing external work, the work performed is produced at the expense of the heat contained in the working substance.

If the expansion takes place in a non-conducting cylinder, the expansion is adiabatic, being accompanied by a fall in temperature of the working substance, air in this case. The cold expanded air is then circulated through the space to be cooled, absorbing heat on the way and produces the refrigerating effect desired.

The production of refrigeration by compressed air on account of the excessive size of compressor cylinders and accompanying low efficiency as compared with machines employing saturated vapors for the refrigerating media, has practically limited the application of air to installations on board vessels. The only reason, at present, apparently existing for the use of cold air machines is the harmless character of the refrigerating media employed.

The low specific heat of air requires the circulation of comparatively large volumes and necessitates bulky apparatus. The compressor cylinder capacity for cold air machines is approximately sixteen times greater than is required for an equal duty when ammonia is employed as the refrigerating medium.

It is apparent that this system should be worked on a closed cycle. That is, the same air is recirculated in order to keep the working temperature range as low as possible and at the same time obviate the attendant loss and practical operating difficulties encountered by the freezing of the moisture carried by the outside air taken into the system.

If the air introduced into the system to make up the leakage loss is cooled down considerably below its dew-point before its introduction, nearly all of the vapor it carries will be eliminated by precipitation and the system will be operating with practically dry air.

The Allen Dense Air Machine. The cycle of operation as indicated above is accomplished in the *Allen* Dense Air Machine, Fig. 1. The influence of moisture is eliminated for all practical purposes of calculation.

Air is drawn into the compressor *B* from the refrigerator coils at a pressure 60 to 70 lb. per square-inch gage and compressed (single stage) to a pressure of 210 to 240 lb. gage.

The heat of compression is removed by passing the compressed air through a cooling coil surrounded by water, the final temperature of the air leaving the coil being about ten degrees higher than the final temperature of the cooling water. The reduced volume of cooled air then passes into the expanding cylinder *D*, having an adjustable cut-off gear. As this piston is connected to the same crankshaft as the compressor, a large portion of the external work expended in compression is recovered.

The expansion of the air is accompanied by a reduction in pressure and corresponding fall in temperature. The air is then discharged into the coils of the room to be refrigerated, the process as indicated being continuous.

An oil extractor is located in the discharge line, from which the frozen oil collected may at intervals be melted by means of the steam jacket of the trap and blown out. The make-up air required to keep the system fully charged is compressed in the small cylinder *G* and discharged

FIG. 1. THE ALLEN DRIED AIR MACHINE.

into the cooler H; its temperature being here lowered, most of the vapor will be condensed and precipitated before the air is introduced into the system. The machine, it will be noted in passing, will have a smaller compressor cylinder than one drawing air in at atmospheric pressure and temperature.

The following steps with accompanying formula will explain in detail this system of refrigeration.

The compression of the air in the compressor cylinder and its re-expansion in the expansion cylinder is assumed to take place adiabatically, which is practically the case (Fig. 2).

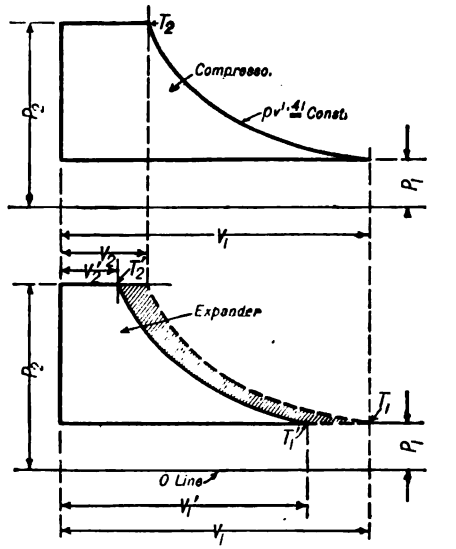

FIG. 2. CYCLE OF THE ALLEN DENSE AIR MACHINE

Compression. A volume of air v_1 is drawn into the compressor cylinder per minute at a pressure p_1 and a temperature T_1 (about 10° below the temperature to be maintained in the refrigerator). The air is compressed to volume v_2, pressure p_2, and absolute temperature T_2. All pressures in the formula following are lb. per sq. in. absolute.

$$T_2 = T_1 \left(\frac{p_2}{p_1}\right)^{0.29} \quad . \quad . \quad . \quad . \quad . \quad . \quad . \quad . \quad . \quad . \quad . \quad (1)$$

$$v_2^{1.41} = \frac{p_1 v_1^{1.41}}{p_2} \quad . \quad . \quad . \quad . \quad . \quad . \quad . \quad . \quad . \quad . \quad . \quad (2)$$

The work of compression, ft.-lb. per minute is

$$w = 3.45 (p_2 v_2 - p_1 v_1) \times 144 \quad . \quad . \quad . \quad . \quad . \quad . \quad . \quad . \quad (3)$$

Cooling. The volume v_2 is reduced to volume v'_2 in the cooler at constant pressure

$$v'_2 = v_2 \frac{T'_2}{T_2} \quad . \quad . \quad . \quad . \quad . \quad . \quad . \quad . \quad . \quad . \quad . \quad (4)$$

The heat (B.t.u.) imparted to the cooling water will be per lb. of air circulated

$$H = C_{p_a} (T_2 - T'_2) \quad (C_{p_a} = 0.24 \text{ specific heat air constant pressure}).$$

Expansion Cylinder. The reduced volume v'_2 is expanded adiabatically to v'_1 and pressure p_1

$$v'^{1.41}_2 = \frac{p_1 v'^{1.41}_1}{p_2} \quad . \quad . \quad . \quad . \quad . \quad . \quad . \quad . \quad . \quad . \quad . \quad (5)$$

The work in ft.-lb. recovered by expansion is given by:

$$w' = 3.45\,(p_2 v'_2 - p_1 v'_1) \times 144 \quad . \quad . \quad . \quad . \quad . \quad . \quad . \quad . \quad (6)$$

The final absolute temperature is

$$T'_1 = T'_2 \left(\frac{p_1}{p_2}\right)^{0.29} \quad . \quad . \quad . \quad . \quad . \quad . \quad . \quad . \quad . \quad . \quad (7)$$

Expansion in Refrigerator Coils. The volume v'_1 passing into the refrigerator coils will expand at constant pressure p_1, returning to the original volume v_1 and absolute temperature T_1,

$$v_1 = v'_1 \frac{T_1}{T'_1} \quad . \quad . \quad . \quad . \quad . \quad . \quad . \quad . \quad . \quad . \quad . \quad (8)$$

This part of the cycle shaded in Fig. 2 gives the refrigerating effect (heat removed) per cu. ft. of compressor piston displacement. Denoting this by H,

$$H = c_{pa}\, d\, (T_1 - T'_1) \text{ B.t.u.} \quad . \quad . \quad . \quad . \quad . \quad . \quad . \quad . \quad . \quad (9)$$

in which d = density, lb. per cu. ft. of air at temperature T_1 and pressure p_1.

The density is readily obtained for any pressure by means of the characteristic equation of gases.

$$P\,V = M\,R\,T.$$

R = 53.35 for air.

P = absolute pressure lb. per sq. ft.

T = absolute temperature.

Then, if M is one pound, its volume is v cu. ft., and $Pv = R\,T$, or $\frac{1}{v} = \frac{P}{RT}$; but $\frac{1}{v} = d = \frac{P}{RT}$, which gives the density in terms of P, R, and T.

Compressor displacement required per ton refrigeration:

1 ton refrigeration = 288,000 B.t.u.

D = displacement of compressor in cu. ft. per 24 hours per ton of refrigeration.

E = volumetric efficiency of compressor (80 per cent, approximately).

$$D = \frac{288{,}000}{d \times C_{pa}\,(T_1 - T'_1) \times E} \quad . \quad . \quad . \quad . \quad . \quad . \quad . \quad . \quad . \quad . \quad . \quad (10)$$

The net horsepower required is

$$W = \frac{w - w'}{33{,}000}$$

$$W = \frac{3.45\,(p_2 v_2 - p_1 v_1 - p_2 v'_2 + p_1 v'_1) \times 144}{33{,}000} \quad . \quad . \quad . \quad . \quad . \quad . \quad (11)$$

CHAPTER XXVI

COMPRESSION MACHINES

General. The great majority of machines used in the production of artificial refrigeration are operated on what is commonly termed the compression system. The principle of operation is based on the use of certain volatile liquids, the most common of which are ammonia (NH_3), sulphur dioxide (SO_2) and carbon dioxide (CO_2). These media exist only as a gas or vapor at ordinary temperatures and atmospheric pressure. The vapors are readily reduced to a liquid state when compressed to a sufficiently high pressure and cooled. The absorption of heat required for the re-evaporation of the liquid at a reduced pressure constitutes the refrigerating effect.

In order that the refrigerating medium be periodically returned to its original liquid state the system must be comprised of the following organs or parts:

(1) The *evaporating coils* or evaporator in which the liquid is evaporated, absorbing heat from the surroundings and producing the refrigerating effect.

(2) The *compressor* which draws the vapor from the evaporating coils and compresses it into the condenser. The terminal pressure required is that corresponding to the temperature of the saturated vapor that is obtainable with the cooling water available.

(3) The *condenser* in which the latent heat and the heat of compression are removed and the vapor liquefied. The heat is removed by the cooling water circulated through or over the condenser pipes or tubes.

Media. The choice of vapor to be used depends mainly on two things:

(1) The pressure range corresponding to the temperatures to be maintained in the condenser and evaporator.

(2) The volume of the medium to be drawn into the compressor to produce a given amount of refrigeration. This determines the size or displacement of the compressor employed.

The following table is based on the properties of the dry and saturated vapors given, working with an evaporator temperature of 15° F. and a condenser temperature of 70° F.

TABLE 1

COMPARISON OF VARIOUS VAPOR MEDIA USED IN REFRIGERATING MACHINES

Evaporator temperature 15° F. Condenser temperature 70° F.

	NH_3	CO_2	SO_2
Condenser pressure (p_c) absolute pounds square inch	129.2	847.	49.56
Evaporator pressure (p_s) absolute pounds square inch	42.67	391.	15.15
Heat content saturated vapor at evaporator pressure (H_s)	542.5	100.7	162.87
Heat content of liquid at condenser pressure (q_c)	42.1	26.02	−5.30
Heat absorbed per pound of media circulated ($R_1 = H_s - q_c$)	500.4	74.68	168.17
Weight of medium to be circulated per minute per ton of refrigeration 24 hours $\left(M = \frac{200}{R_1}\right)$	0.40	2.67	1.19
Specific volume of vapor at evaporator pressure (v_s)	6.583	.224	5.21
Volume of vapor to be pumped by compressor per minute per ton of refrigeration 24 hours ($M \times v_s$)	2.63	0.60	6.2

From the above table it appears that carbon dioxide requires the employment of very high pressures necessitating the use of forged steel compressor cylinders. The compressors are limited

in size for constructive reasons and are therefore limited in capacity. With sulphur dioxide the pressures are comparatively low, but the volume of gas to be handled is about four times that required when ammonia is used. With ammonia the condensing pressure is reasonable and the volume of vapor is not excessive; hence from these considerations, ammonia is considered in general to be the most advantageous and is used by the majority of refrigerating machine builders.

Vaporization of a Liquid and "Refrigerating Effect." In order to vaporize a liquid, the application of heat from an external source is required. The amount of heat absorbed by one

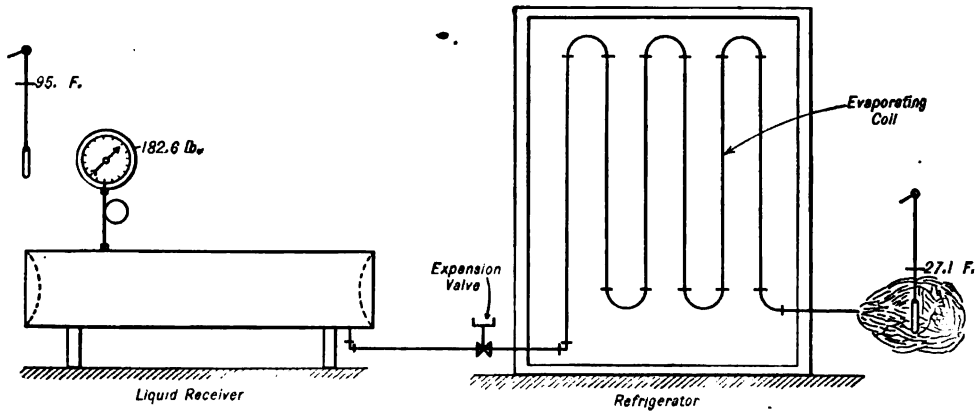

FIG. 1. THE APPLICATION OF AMMONIA TO REFRIGERATION PRACTICE.

pound of a liquid while vaporizing into a dry saturated gas is known as the *latent heat of vaporization* of the substance and varies greatly for different liquids, pressures and corresponding temperatures.

For refrigerating purposes, when a liquid is to be used as the refrigerating medium, we must evidently choose one which will evaporate at a relatively low temperature (low boiling point) in order that it may extract heat from the surroundings during the evaporating period.

Suppose, for example (Fig. 1), we have 1 lb. of liquid ammonia in a drum or "liquid receiver" located outside of a cold storage room and connected to a coil known as the "evaporating coil" located in the room. The temperature outside 95° F., this being also the temperature of the liquid ammonia. A valve known as the expansion or needle valve is placed in the line connecting the drum with the "evaporating coil," controlling the flow of liquid into the coil.

Referring to the table of "Properties of Saturated Ammonia Vapor" (Table 2), we find that at a temperature of 95° the pressure existing in the drum will be 182.6 lb. gage. The heat of the liquid at this temperature is 71.3. The expansion valve being opened allows the liquid to flow into the evaporating coil, the end of which is open to the atmosphere. The evaporation of the liquid into dry saturated gas will take place at atmospheric pressure. Referring to the ammonia table, we find that at atmospheric pressure the boiling point of the liquid is $-27.1°$ F. and the heat content, or the heat of saturated vapor, is 530.7 B.t.u. per lb. The heat required for vaporization is supplied from the medium surrounding the evaporating coil.

Let t_c = temperature of the condensed liquid in the receiver.
t_s = temperature of saturated gas in evaporating coils.
v_s = specific volume of the saturated gas at temperature t_s.
q_c = heat of the liquid for temperature t_c.
H_s = heat content at temperature t_s.

Then the heat (B.t.u. per lb.) which the medium is capable of extracting from the surroundings will be the differen e between the heat c ntent of the final and initial state . The initial state being liquid and the assumed final state dry saturated gas, this difference is

$$R_1 = H_s - q_c \quad . \quad . \quad . \quad . \quad . \quad . \quad . \quad . \quad . \quad . \quad (1)$$

and is known as the *refrigerating effect* of 1 lb. of the medium used. It is assumed that the gas leaves the coil in a perfectly dry saturated condition (not superheated).

Direct Expansion System

FIG. 2.

For the example quoted, $R_1 = 530.7 - 71.3 = 459.4$ B.t.u. The "refrigerating effect" of 1 cu. ft. of the saturated vapor is

$$R_2 = \frac{R_1}{v_s} \text{ B.t.u.} \quad . \quad . \quad . \quad . \quad . \quad . \quad . \quad . \quad . \quad . \quad (2)$$

and for the example cited is

$$R_2 = \frac{459.4}{18} = 25.5 \text{ B.t.u.}$$

The weight of the refrigerating medium to be circulated per min. per ton of refrigeration per 24 hours is

$$M = \frac{288{,}000}{R_1 \times 24 \times 60} = \frac{200}{H_s - q_c} \text{ lbs.} \quad . \quad . \quad . \quad . \quad . \quad . \quad . \quad (3)$$

and the volume (cu. ft.) of dry saturated gas leaving the evaporating coils per ton of refrigeration per 24 hours is

$$G = \frac{200 \times v_s}{R_1} \text{ cu. ft. per min.} \quad . \quad . \quad . \quad . \quad . \quad . \quad . \quad . \quad (4)$$

TABLE 2

PROPERTIES OF SATURATED AMMONIA VAPOR*

Goodenough-Mosher

Temp. Fahr. t	Pressure, Lb. per Sq. In. p	Sp. Vol. Cu. Ft. per Lb. v	Density Lb. per Cu. Ft. $1/v'' = d$	Heat Content of Liquid q	Latent Heat of Evap. L	Heat Content of Vapor H	Internal Energy B.T.U. Evap. ρ	Internal Energy B.T.U. Vapor u''	Entropy Liquid n	Entropy Evap. r/T	Entropy Vapor N
− 30°	13.56	19.35	0.05168	−65.0	594.7	529.8	546.2	481.2	−0.1410	1.3842	1.2432
− 29°	13.95	18.84	0.05306	−63.9	594.0	530.1	545.4	481.4	−0.1386	1.3793	1.2407
− 28°	14.35	18.35	0.05449	−62.9	593.2	530.4	544.6	481.6	−0.1362	1.3744	1.2382
− 27°	14.76	17.87	0.05596	−61.8	592.5	530.7	543.7	481.9	−0.1338	1.3696	1.2358
− 26°	15.18	17.40	0.05747	−60.8	591.8	531.0	542.9	482.1	−0.1314	1.3647	1.2333
− 25°	15.61	16.95	0.0590	−59.8	591.1	531.3	542.1	482.3	−0.1290	1.3598	1.2309
− 24°	16.05	16.51	0.0606	−58.7	590.3	531.6	541.3	482.5	−0.1266	1.3550	1.2285
− 23°	16.50	16.09	0.0622	−57.7	589.6	531.9	540.5	482.8	−0.1242	1.3502	1.2260
− 22°	16.96	15.68	0.0638	−56.6	588.8	532.2	539.7	483.0	−0.1218	1.3454	1.2236
− 21°	17.43	15.28	0.0654	−55.6	588.1	532.5	538.9	483.2	−0.1195	1.3407	1.2213
− 20°	17.91	14.89	0.0671	−54.6	587.4	532.8	538.0	483.4	−0.1171	1.3360	1.2189
− 19°	18.40	14.52	0.0689	−53.5	586.6	533.1	537.2	483.6	−0.1147	1.3313	1.2165
− 18°	18.90	14.16	0.0706	−52.5	585.9	533.4	536.4	483.8	−0.1124	1.3266	1.2142
− 17°	19.41	13.81	0.0724	−51.4	585.1	533.7	535.6	484.0	−0.1100	1.3219	1.2118
− 16°	19.93	13.48	0.0742	−50.4	584.4	534.0	534.8	484.3	−0.1077	1.3172	1.2095
− 15°	20.46	13.15	0.0760	−49.4	583.6	534.3	533.9	484.5	−0.1054	1.3126	1.2072
− 14°	21.00	12.83	0.0779	−48.3	582.9	534.6	533.1	484.7	−0.1031	1.3080	1.2049
− 13°	21.56	12.51	0.0799	−47.3	582.1	534.8	532.3	484.9	−0.1007	1.3033	1.2026
− 12°	22.13	12.21	0.0819	−46.2	581.4	535.1	531.4	485.1	−0.0984	1.2987	1.2003
− 11°	22.71	11.92	0.0839	−45.2	580.6	535.4	530.6	485.3	−0.0961	1.2941	1.1980
− 10°	23.30	11.63	0.0860	−44.2	579.9	535.7	529.8	485.5	−0.0938	1.2896	1.1958
− 9°	23.90	11.35	0.0881	−43.1	579.1	536.0	528.9	485.7	−0.0915	1.2851	1.1935
− 8°	24.52	11.08	0.0903	−42.1	578.4	536.3	528.1	485.9	−0.0893	1.2806	1.1913
− 7°	25.15	10.82	0.0924	−41.0	577.6	536.6	527.3	486.1	−0.0870	1.2761	1.1891
− 6°	25.80	10.57	0.0946	−40.0	576.8	536.9	526.4	486.3	−0.0847	1.2716	1.1869
− 5°	26.46	10.32	0.0969	−38.9	576.1	537.1	525.6	486.6	−0.0824	1.2671	1.1847
− 4°	27.13	10.08	0.0992	−37.9	575.3	537.4	524.7	486.8	−0.0801	1.2626	1.1825
− 3°	27.82	9.85	0.1015	−36.8	574.6	537.7	523.9	487.0	−0.0778	1.2582	1.1804
− 2°	28.52	9.62	0.1039	−35.8	573.8	538.0	523.1	487.2	−0.0755	1.2537	1.1782
− 1°	29.23	9.40	0.1064	−34.7	573.0	538.2	522.2	487.4	−0.0732	1.2493	1.1761
0°	29.95	9.19	0.1089	−33.7	572.2	538.5	521.4	487.6	−0.0709	1.2449	1.1740
1°	30.69	8.98	0.1114	−32.6	571.4	538.8	520.5	487.8	−0.0686	1.2405	1.1719
2°	31.44	8.78	0.1139	−31.6	570.7	539.1	519.7	488.0	−0.0663	1.2362	1.1699
3°	32.21	8.58	0.1165	−30.5	569.9	539.3	518.8	488.2	−0.0640	1.2318	1.1678
4°	32.99	8.39	0.1192	−29.5	569.1	539.6	518.0	488.4	−0.0618	1.2275	1.1657
5°	33.79	8.20	0.1219	−28.4	568.3	539.9	517.1	488.6	−0.0595	1.2231	1.1636
6°	34.60	8.02	0.1247	−27.4	567.5	540.1	516.3	488.7	−0.0572	1.2188	1.1615
7°	35.43	7.84	0.1275	−26.3	566.7	540.4	515.4	488.9	−0.0550	1.2145	1.1595
8°	36.28	7.67	0.1304	−25.3	565.9	540.7	514.6	489.1	−0.0527	1.2102	1.1575
9°	37.14	7.50	0.1333	−24.2	565.2	540.9	513.7	489.3	−0.0505	1.2059	1.1554
10°	38.02	7.34	0.1363	−23.2	564.4	541.2	512.9	489.5	−0.0483	1.2017	1.1534
11°	38.93	7.18	0.1393	−22.1	563.6	541.4	512.0	489.7	−0.0461	1.1975	1.1514
12°	39.84	7.02	0.1424	−21.1	562.8	541.7	511.2	489.9	−0.0438	1.1932	1.1494
13°	40.77	6.87	0.1455	−20.0	562.0	542.0	510.3	490.1	−0.0416	1.1890	1.1474
14°	41.71	6.72	0.1487	−19.0	561.2	542.2	509.4	490.3	−0.0394	1.1848	1.1454
15°	42.67	6.583	0.1519	−17.9	560.4	542.5	508.6	490.5	−0.0372	1.1806	1.1434
16°	43.65	6.444	0.1552	−16.8	559.6	542.7	507.7	490.6	−0.0350	1.1765	1.1415
17°	44.65	6.308	0.1585	−15.8	558.8	543.0	506.8	490.8	−0.0328	1.1723	1.1395
18°	45.67	6.176	0.1619	−14.7	558.0	543.2	506.0	491.0	−0.0306	1.1682	1.1376
19°	46.70	6.047	0.1654	−13.6	557.1	543.5	505.1	491.2	−0.0284	1.1640	1.1356
20°	47.75	5.920	0.1689	−12.6	556.3	543.7	504.2	491.4	−0.0262	1.1599	1.1337
21°	48.82	5.796	0.1725	−11.5	555.5	544.0	503.3	491.6	−0.0240	1.1558	1.1318
22°	49.91	5.676	0.1762	−10.4	554.7	544.2	502.4	491.8	−0.0218	1.1516	1.1298
23°	51.02	5.560	0.1799	− 9.4	553.9	544.5	501.6	491.9	−0.0196	1.1475	1.1279
24°	52.15	5.447	0.1836	− 8.3	553.1	544.7	500.7	492.1	−0.0174	1.1435	1.1260
25°	53.30	5.336	0.1874	− 7.3	552.2	545.0	499.8	492.3	−0.0153	1.1395	1.1242
26°	54.47	5.228	0.1913	− 6.2	551.4	545.2	498.9	492.5	−0.0131	1.1354	1.1223
27°	55.66	5.122	0.1953	− 5.1	550.6	545.5	498.1	492.7	−0.0109	1.1314	1.1205
28°	56.87	5.019	0.1993	− 4.1	549.8	545.7	497.2	492.9	−0.0087	1.1274	1.1187
29°	58.10	4.918	0.2034	− 3.0	549.0	546.0	496.3	493.0	−0.0066	1.1234	1.1168
30°	59.35	4.820	0.2075	− 1.9	548.1	546.2	495.4	493.2	−0.0044	1.1194	1.1150
31°	60.62	4.724	0.2117	− 0.8	547.3	546.4	494.5	493.4	−0.0022	1.1154	1.1132
32°	61.91	4.631	0.2159	+ 0.3	546.5	546.7	493.6	493.6	0.0000	1.1114	1.1114
33°	63.22	4.540	0.2203	1.3	545.6	546.9	492.8	493.8	+0.0021	1.1075	1.1097
34°	64.55	4.451	0.2247	2.4	544.8	547.1	491.9	493.9	0.0043	1.1036	1.1079
35°	65.91	4.364	0.2292	3.5	543.9	547.4	491.0	494.1	0.0065	1.0996	1.1061
36°	67.29	4.279	0.2337	4.6	543.1	547.6	490.1	494.3	0.0087	1.0957	1.1043
37°	68.69	4.196	0.2384	5.6	542.2	547.8	489.2	494.5	0.0108	1.0918	1.1026

TABLE 2.—*Continued.*

Temp. Fahr. t	Pressure, Lb. per Sq. in. p	Sp. Vol. Cu. Ft. per Lb. v	Density Lb. per Cu. Ft. $1/v''$ d	Heat Content of Liquid q' q	Latent Heat of Evap. r L	Heat Content of Vapor q'' H	Internal Energy B.T.U. Evap. ρ	Internal Energy B.T.U. Vapor u''	Entropy Liquid s' n	Entropy Evap. r/T	Entropy Vapor s'' N
38°....	70.11	4.115	0.2431	6.7	541.4	548.1	488.3	494.6	0.0130	1.0879	1.1009
39°....	71.56	4.036	0.2478	7.8	540.5	548.3	487.4	494.8	0.0151	1.0840	1.0991
40°....	73.03	3.959	0.2526	8.9	539.7	548.5	486.5	495.0	0.0173	1.0801	1.0974
41°....	74.53	3.884	0.2575	10.0	538.8	548.8	485.5	495.2	0.0194	1.0763	1.0957
42°....	76.05	3.810	0.2625	11.1	537.9	549.0	484.6	495.3	0.0216	1.0724	1.0940
43°....	77.59	3.738	0.2675	12.2	537.1	549.2	483.7	495.5	0.0237	1.0686	1.0923
44°....	79.16	3.668	0.2727	13.3	536.2	549.4	482.8	495.7	0.0259	1.0647	1.0906
45°....	80.75	3.599	0.2779	14.3	535.3	549.7	481.9	495.9	0.0280	1.0609	1.0889
46°....	82.37	3.532	0.2832	15.4	534.5	549.9	481.0	496.0	0.0301	1.0571	1.0872
47°....	84.01	3.466	0.2885	16.5	533.6	550.1	480.1	496.2	0.0323	1.0533	1.0856
48°....	85.68	3.402	0.2940	17.6	532.7	550.3	479.2	496.4	0.0344	1.0495	1.0839
49°....	87.37	3.339	0.2995	18.7	531.8	550.6	478.3	496.5	0.0366	1.0457	1.0822
50°....	89.09	3.278	0.3051	19.8	531.0	550.8	477.3	496.7	0.0387	1.0419	1.0806
51°....	90.83	3.219	0.3107	20.9	530.1	551.0	476.4	496.9	0.0408	1.0382	1.0790
52°....	92.59	3.161	0.3164	22.0	529.2	551.2	475.5	497.0	0.0430	1.0344	1.0774
53°....	94.38	3.104	0.3222	23.1	528.3	551.4	474.6	497.2	0.0451	1.0306	1.0757
54°....	96.19	3.048	0.3281	24.2	527.4	551.6	473.6	497.4	0.0473	1.0268	1.0741
55°....	98.03	2.992	0.3342	25.3	526.5	551.9	472.7	497.5	0.0494	1.0231	1.0725
56°....	99.90	2.938	0.3404	26.4	525.6	552.1	471.8	497.7	0.0516	1.0194	1.0710
57°....	101.8	2.885	0.3467	27.5	524.7	552.3	470.8	497.9	0.0537	1.0157	1.0694
58°....	103.7	2.833	0.3530	28.7	523.8	552.5	469.9	498.0	0.0559	1.0119	1.0678
59°....	105.7	2.783	0.3594	29.8	522.9	552.7	469.0	498.2	0.0580	1.0083	1.0663
60°....	107.7	2.734	0.3658	30.9	522.0	552.9	468.0	498.4	0.0601	1.0046	1.0647
61°....	109.7	2.686	0.3723	32.0	521.1	553.1	467.1	498.5	0.0623	1.0009	1.0632
62°....	111.7	2.639	0.3790	33.1	520.2	553.3	466.1	498.7	0.0644	0.9973	1.0617
63°....	113.8	2.592	0.3858	34.2	519.3	553.5	465.2	498.9	0.0665	0.9937	1.0602
64°....	115.9	2.547	0.3927	35.3	518.4	553.7	464.2	499.0	0.0687	0.9900	1.0587
65°....	118.1	2.503	0.3996	36.5	517.5	554.0	463.3	499.2	0.0708	0.9863	1.0571
66°....	120.3	2.460	0.4066	37.6	516.5	554.2	462.3	499.4	0.0729	0.9827	1.0556
67°....	122.5	2.418	0.4136	38.7	515.6	554.4	461.4	499.5	0.0750	0.9791	1.0541
68°....	124.7	2.377	0.4207	39.9	514.7	554.6	460.4	499.7	0.0771	0.9755	1.0526
69°....	126.9	2.336	0.4280	41.0	513.7	554.8	459.5	499.9	0.0792	0.9719	1.0511
70°....	129.2	2.296	0.4354	42.1	512.8	555.0	458.5	500.0	0.0813	0.9683	1.0496
71°....	131.5	2.257	0.4430	43.3	511.9	555.2	457.6	500.2	0.0834	0.9647	1.0481
72°....	133.9	2.219	0.4506	44.4	511.0	555.4	456.6	500.4	0.0855	0.9612	1.0467
73°....	136.3	2.182	0.4583	45.5	510.0	555.6	455.7	500.5	0.0876	0.9576	1.0452
74°....	138.7	2.145	0.4662	46.7	509.1	555.8	454.7	500.7	0.0898	0.9540	1.0438
75°....	141.1	2.109	0.4742	47.8	508.1	556.0	453.7	500.9	0.0919	0.9504	1.0423
76°....	143.6	2.074	0.4823	49.0	507.2	556.2	452.7	501.0	0.0940	0.9469	1.0409
77°....	146.1	2.039	0.4905	50.1	506.2	556.4	451.7	501.2	0.0961	0.9434	1.0395
78°....	148.7	2.005	0.4988	51.3	505.3	556.6	450.8	501.3	0.0983	0.9398	1.0381
79°....	151.3	1.972	0.5071	52.4	504.3	556.8	449.8	501.5	0.1004	0.9363	1.0367
80°....	153.9	1.940	0.5155	53.6	503.4	557.0	448.8	501.7	0.1025	0.9328	1.0353
81°....	156.5	1.908	0.5241	54.8	502.4	557.1	447.8	501.8	0.1047	0.9293	1.0339
82°....	159.2	1.877	0.5328	55.9	501.4	557.3	446.9	502.0	0.1068	0.9258	1.0326
83°....	161.9	1.847	0.5416	57.1	500.5	557.5	445.9	502.2	0.1090	0.9222	1.0312
84°....	164.6	1.817	0.5504	58.3	499.5	557.7	444.9	502.3	0.1111	0.9187	1.0298
85°....	167.4	1.788	0.5594	59.4	498.5	557.9	443.9	502.5	0.1132	0.9153	1.0285
86°....	170.2	1.759	0.5685	60.6	497.5	558.1	442.9	502.7	0.1153	0.9118	1.0271
87°....	173.0	1.731	0.5777	61.8	496.5	558.3	441.9	502.8	0.1175	0.9083	1.0258
88°....	175.9	1.704	0.5869	63.0	495.5	558.5	440.9	503.0	0.1196	0.9049	1.0245
89°....	178.8	1.677	0.5964	64.2	494.5	558.7	439.9	503.1	0.1217	0.9014	1.0231
90°....	181.8	1.650	0.6060	65.3	493.5	558.9	438.9	503.3	0.1238	0.8980	1.0218
91°....	184.8	1.624	0.6158	66.5	492.5	559.1	437.9	503.5	0.1259	0.8945	1.0205
92°....	187.8	1.598	0.6258	67.7	491.5	559.2	436.9	503.6	0.1281	0.8910	1.0191
93°....	190.9	1.573	0.6358	68.9	490.5	559.4	435.9	503.8	0.1302	0.8876	1.0178
94°....	194.1	1.548	0.6460	70.1	489.5	559.6	434.9	504.0	0.1323	0.8842	1.0165
95°....	197.3	1.524	0.656	71.3	488.5	559.8	433.9	504.1	0.1344	0.8808	1.0152
96°....	200.5	1.500	0.667	72.5	487.5	560.0	432.8	504.3	0.1365	0.8774	1.0139
97°....	203.8	1.477	0.677	73.7	486.5	560.2	431.8	504.5	0.1387	0.8740	1.0127
98°....	207.1	1.454	0.688	74.9	485.4	560.3	430.8	504.6	0.1408	0.8706	1.0114
99°....	210.4	1.431	0.699	76.1	484.4	560.5	429.8	504.8	0.1429	0.8672	1.0101
100°....	213.8	1.408	0.710	77.3	483.4	560.7	428.7	504.9	0.1450	0.8638	1.0088
101°....	217.2	1.386	0.721	78.5	482.3	560.9	427.7	505.1	0.1471	0.8604	1.0076
102°....	220.7	1.365	0.732	79.7	481.3	561.1	426.7	505.2	0.1493	0.8570	1.0063
103°....	224.2	1.345	0.743	80.9	480.3	561.2	425.6	505.4	0.1514	0.8537	1.0051
104°....	227.7	1.325	0.755	82.2	479.2	561.4	424.6	505.6	0.1535	0.8503	1.0039
105°....	231.2	1.305	0.766	83.4	478.2	561.6	423.5	505.7	0.1557	0.8469	1.0026
106°....	234.8	1.285	0.778	84.6	477.1	561.8	422.5	505.9	0.1578	0.8436	1.0014
107°....	238.4	1.266	0.790	85.8	476.1	561.9	421.4	506.1	0.1599	0.8403	1.0002
108°....	242.1	1.247	0.802	87.1	475.0	562.1	420.4	506.2	0.1621	0.8369	0.9990
109°....	245.8	1.228	0.814	88.3	474.0	562.3	419.3	506.4	0.1642	0.8336	0.9978
110°....	249.6	1.210	0.826	89.6	472.9	562.5	418.3	506.6	0.1664	0.8302	0.9966
111°....	253.4	1.192	0.839	90.8	471.8	562.6	417.2	506.7	0.1686	0.8268	0.9954
112°....	257.3	1.174	0.852	92.1	470.7	562.8	416.1	506.9	0.1707	0.8235	0.9942
113°....	261.2	1.156	0.865	93.3	469.6	563.0	415.1	507.1	0.1729	0.8202	0.9930
114°....	265.2	1.139	0.878	94.6	468.5	563.1	414.0	507.2	0.1750	0.8169	0.9919

* University of Illinois Bulletin, No. 66.

TABLE 3

PROPERTIES OF SUPERHEATED AMMONIA

Goodenough-Mosher

Pressure, Lb.		Liquid	Sat. Vapor	Degrees of Superheat												
				60	70	80	90	100	110	120	130	140	150	160	180	200
140	t	74.5		134.5	144.5	154.5	164.5	174.5	184.5	194.5	204.5	214.5	224.5	234.5	254.5	274.5
	v	0.027	2.12	2.48	2.58	2.58	2.63	2.69	2.74	2.79	2.84	2.89	2.94	2.99	3.06	3.17
	i	47.3	555.9	596.4	602.6	608.7	614.7	620.6	626.4	632.2	637.9	643.6	649.3	654.9	665.9	676.9
	s	0.0910	1.0430	1.1150	1.1254	1.1354	1.1450	1.1544	1.1635	1.1724	1.1811	1.1896	1.1979	1.2060	1.2218	1.2370
145	t	76.5		136.5	146.5	156.5	166.5	176.5	186.5	196.5	206.5	216.5	226.5	236.5	256.5	296.5
	v	0.027	2.06	2.39	2.44	2.50	2.55	2.60	2.65	2.70	2.74	2.79	2.84	2.89	2.98	3.07
	i	49.6	556.3	597.0	603.2	609.3	615.3	621.2	627.1	632.9	638.7	644.4	650.0	655.6	666.7	677.8
	s	0.0952	1.0401	1.1122	1.1225	1.1325	1.1422	1.1516	1.1607	1.1696	1.1783	1.1868	1.1951	1.2032	1.2190	1.2342
150	t	78.5		138.5	148.5	158.5	168.5	178.5	188.5	198.5	208.5	218.5	228.5	238.5	258.5	278.5
	v	0.027	1.99	2.32	2.37	2.42	2.47	2.51	2.56	2.61	2.66	2.70	2.75	2.80	2.89	2.97
	i	51.8	556.7	597.5	603.8	609.9	615.9	621.9	627.8	633.6	639.4	645.1	650.7	656.3	667.5	678.6
	s	0.0998	1.0374	1.1095	1.1198	1.1298	1.1395	1.1489	1.1580	1.1669	1.1757	1.1841	1.1924	1.2005	1.2163	1.2315
155	t	80.4		140.4	150.4	160.4	170.4	180.4	190.4	200.4	210.4	220.4	230.4	240.4	260.4	280.4
	v	0.027	1.93	2.24	2.29	2.34	2.39	2.44	2.48	2.53	2.57	2.62	2.66	2.71	2.80	2.88
	i	54.0	557.0	598.0	604.3	610.5	616.5	622.5	628.4	634.2	640.0	645.7	651.4	657.0	668.2	679.3
	s	0.1034	1.0347	1.1068	1.1172	1.1272	1.1369	1.1463	1.1554	1.1643	1.1730	1.1814	1.1897	1.1978	1.2136	1.2288
160	t	82.3		142.3	152.3	162.3	172.3	182.3	192.3	202.3	212.3	222.3	232.3	242.3	262.3	282.3
	v	0.027	1.87	2.18	2.22	2.27	2.32	2.36	2.41	2.45	2.50	2.54	2.58	2.63	2.71	2.79
	i	56.2	557.4	598.6	604.9	611.1	617.1	623.2	629.1	634.9	641.7	646.4	652.1	657.7	669.0	680.1
	s	0.1074	1.0322	1.1043	1.1147	1.1247	1.1344	1.1438	1.1529	1.1618	1.1705	1.1789	1.1872	1.1954	1.2112	1.2263
165	t	84.1		144.1	154.1	164.1	174.1	184.1	194.1	204.1	214.1	224.1	234.1	244.1	264.1	284.1
	v	0.027	1.81	2.11	2.16	2.20	2.25	2.29	2.34	2.38	2.42	2.47	2.51	2.55	2.63	2.71
	i	58.4	557.7	599.1	605.4	611.6	617.7	623.7	629.7	635.5	641.3	647.1	652.8	658.4	669.7	680.8
	s	0.1114	1.0297	1.1018	1.1123	1.1223	1.1320	1.1414	1.1505	1.1594	1.1681	1.1765	1.1848	1.1929	1.2086	1.2237
170	t	85.9		145.9	155.9	165.9	175.9	185.9	195.9	205.9	215.9	225.9	235.9	245.9	265.9	285.9
	v	0.027	1.76	2.06	2.11	2.15	2.19	2.23	2.27	2.31	2.36	2.40	2.44	2.48	2.56	2.64
	i	60.5	558.1	599.6	606.0	612.2	618.3	624.3	630.3	636.1	641.9	647.7	653.4	659.0	670.3	681.5
	s	0.1152	1.0272	1.0995	1.1099	1.1199	1.1296	1.1390	1.1481	1.1570	1.1657	1.1741	1.1824	1.1905	1.2062	1.2213
180	t	89.4		149.4	159.4	169.4	179.4	189.4	199.4	209.4	219.4	229.4	239.4	249.4	269.4	289.4
	v	0.027	1.67	1.94	1.99	2.03	2.07	2.11	2.15	2.19	2.23	2.27	2.31	2.35	2.42	2.49
	i	64.6	558.8	600.6	607.0	613.2	619.4	625.4	631.4	637.3	643.1	648.9	654.7	660.3	671.6	682.8
	s	0.1226	1.0226	1.0950	1.1054	1.1154	1.1251	1.1346	1.1436	1.1525	1.1612	1.1696	1.1779	1.1860	1.2017	1.2168
190	t	92.7		152.7	162.7	172.7	182.7	192.7	202.7	212.7	222.7	232.7	242.7	252.7	272.7	292.7
	v	0.027	1.58	1.84	1.88	1.92	1.96	2.00	2.04	2.08	2.12	2.15	2.19	2.23	2.30	2.37
	i	68.6	559.4	601.5	607.9	614.2	620.4	626.5	632.5	638.4	644.3	650.1	655.9	661.6	672.9	684.1
	s	0.1296	1.0182	1.0908	1.1012	1.1112	1.1209	1.1303	1.1394	1.1483	1.1570	1.1654	1.1737	1.1818	1.1975	1.2126
200	t	95.9		155.9	165.9	175.9	185.9	195.9	205.9	215.9	225.9	235.9	245.9	255.9	275.9	295.9
	v	0.027	1.50	1.75	1.79	1.83	1.87	1.90	1.94	1.97	2.01	2.04	2.08	2.11	2.18	2.25
	i	72.3	560.0	602.4	608.8	615.2	621.4	627.5	633.5	639.5	645.4	651.2	657.0	662.7	674.1	685.4
	s	0.1363	1.0141	1.0868	1.0972	1.1072	1.1169	1.1263	1.1354	1.1443	1.1530	1.1614	1.1697	1.1778	1.1935	1.2085
210	t	98.9		158.9	168.9	178.9	188.9	198.9	208.9	218.9	228.9	238.9	248.9	258.9	278.9	298.9
	v	0.027	1.43	1.67	1.71	1.75	1.78	1.82	1.85	1.89	1.92	1.96	1.99	2.02	2.09	2.15
	i	76.0	560.5	603.2	609.7	616.1	622.3	628.4	634.5	640.5	646.4	652.3	658.1	663.8	675.2	686.6
	s	0.1427	1.0102	1.0829	1.0933	1.1033	1.1130	1.1224	1.1316	1.1405	1.1492	1.1576	1.1659	1.1740	1.1897	1.2047
220	t	101.8		161.8	171.8	181.8	191.8	201.8	211.8	221.8	231.8	241.8	251.8	261.8	281.8	301.8
	v	0.028	1.37	1.60	1.64	1.67	1.70	1.74	1.77	1.80	1.84	1.87	1.90	1.93	2.00	2.06
	i	79.5	561.0	603.9	610.5	616.9	623.2	629.3	635.4	641.4	647.4	653.3	659.1	664.9	676.3	687.7
	s	0.1488	1.0065	1.0793	1.0897	1.0997	1.1094	1.1188	1.1280	1.1369	1.1455	1.1539	1.1622	1.1703	1.1860	1.2010
230	t	104.7		164.7	174.7	184.7	194.7	204.7	214.7	224.7	234.7	244.7	254.7	264.7	284.7	304.7
	v	0.028	1.31	1.53	1.57	1.60	1.63	1.67	1.70	1.73	1.76	1.79	1.82	1.85	1.91	1.97
	i	83.0	561.5	604.7	611.3	617.7	624.0	630.2	636.3	642.3	648.3	654.2	660.1	665.9	677.4	688.8
	s	0.1549	1.0030	1.0759	1.0863	1.0963	1.1060	1.1154	1.1245	1.1334	1.1421	1.1505	1.1588	1.1669	1.1826	1.1976
240	t	107.4		167.4	177.4	187.4	197.4	207.4	217.4	227.4	237.4	247.4	257.4	267.4	287.4	307.4
	v	0.028	1.26	1.47	1.50	1.53	1.57	1.60	1.63	1.66	1.69	1.72	1.75	1.78	1.84	1.89
	i	86.4	562.0	605.4	612.0	618.5	624.8	631.1	637.2	643.2	649.2	655.1	661.0	666.9	678.4	689.8
	s	0.1609	0.9997	1.0725	1.0829	1.0930	1.1027	1.1121	1.1212	1.1301	1.1388	1.1472	1.1555	1.1635	1.1792	1.1943

TABLE 4

PROPERTIES OF SATURATED CARBON DIOXIDE

(Amagat)

Temperature, Deg. F.	Pressure, Absolute, Lb. per Sq. In.	Volume, Cu. Ft. per Lb.	Weight, Lb. per Cu. Ft.	Heat in B.t.u. per Lb. Above 32° F., Latent		
				of Liquid	of Vapor	Total
−22	213.0	0.4323	2.32	−25.72	126.13	100.41
−13	248.5	.3674	2.73	−21.87	122.67	100.80
− 4	288.3	.3132	3.19	−17.87	118.86	100.99
+ 5	333.7	.2674	3.74	−13.73	114.71	100.98
14	384.8	.2286	4.37	− 9.38	110.12	100.74
23	440.2	.1952	5.12	− 4.82	105.04	100.22
32	502.7	.1669	6.00	0.00	99.34	99.34
41	573.3	.1422	7.03	+ 5.17	92.91	98.08
50	648.9	.1205	8.30	10.76	85.54	96.30
59	732.7	.1010	9.90	17.01	76.84	93.85
68	825.0	.0840	11.92	24.21	66.15	90.36
77	928.7	.0672	14.85	33.19	51.91	85.10
86	1,038.0	.0474	21.09	47.50	26.88	74.38
87.8	1,060.7	.0412	24.27	53.77	15.04	68.81
88.4	1,069.8	.0346	28.95	61.45	0.00	61.45

TABLE 5

PROPERTIES OF SATURATED SULPHUR DIOXIDE

(Cailletet and Mathias)

Temperature, Deg. F	Pressure, Absolute, Lb. per Sq. In.	Volume, Cu. Ft. per Lb.	Weight, Lb. per Cu. Ft.	Heat in B.t.u. per Lb. Above 32° F., Latent		
				of Liquid	of Vapor	Total
−40	3.12	22.715	0.044	−21.33	178.56	157.23
−31	4.26	17.121	.058	−18.33	177.36	158.53
−22	5.54	13.177	.076	−16.29	175.99	159.70
−13	7.24	10.307	.096	−13.72	174.42	160.70
− 4	9.23	8.223	.122	−11.07	172.66	161.59
+ 5	11.79	6.668	.150	− 8.39	170.68	162.29
14	14.77	5.290	.189	− 5.65	168.48	162.83
23	18.32	4.328	.231	− 2.84	166.08	163.24
32	22.44	3.574	.280	0.00	163.48	163.48
41	27.40	2.950	.340	+ 2.90	160.65	163.55
50	33.23	2.437	.411	5.85	157.61	163.46
59	39.90	2.036	.493	8.86	155.36	163.22
68	45.57	1.715	.585	11.92	150.93	162.85
77	56.23	1.443	.696	15.03	147.28	162.31
86	66.31	1.218	.824	18.20	143.80	161.60
95	77.53	1.042	.964	21.42	139.32	160.74
104	90.17	0.882	1.141	24.68	135.05	159.73

Ammonia Compressor (Figs. 3 and 4). In order to return the vapor to its original liquid state at the higher pressure, it is necessary to employ a compressor and condenser. The power required to operate the compressor may be estimated in the following manner:

In the ideal Rankine cycle the vapor, from the evaporating coil, is admitted during the suction stroke at constant pressure (p_s) corresponding to the temperature (t_s) of the saturated vapor in the coil. It is compressed adiabatically to the condenser pressure p_c corresponding to the temperature of the liquid t_c and discharged at this constant pressure to the condenser. During the compression period the gas is superheated. The theoretical amount of work performed by the compression on one pound of the vapor is equal to the difference between the heat content at the beginning and end of compression.

If the vapor is dry saturated or superheated at the beginning of compression the operation is said to be *dry compression*. If the vapor is wet at the beginning of compression the operation is said to be *wet compression*.

The vapor may, of course, be in any one of these three states, but for estimating purposes it is customary to assume that the vapor will be dry and saturated at the beginning of compression, which is entirely possible, as an excess amount of liquid may be passed through the evaporating coil to compensate for any superheating in the suction line or compressor suction valves.

FIG. 3. SINGLE-ACTING COMPRESSOR CYLINDER, VALVE IN PISTON.

Let H_s = heat content of saturated vapor at the beginning of compression corresponding to the evaporator temperature t_s (Table 2).

H = heat content of superheated vapor at the end of compression pressure p_c (Table 3).

H_c = heat content of saturated vapor for pressure p_c.

T_s = absolute temperature at beginning of compression $(t_s + 460)$.

T = absolute temperature at end of compression $(t + 460)$.

C_p = mean specific heat at constant pressure p_c for superheated vapor (Fig. 6) between temperature t_c and t.

p_s = absolute suction and evaporator pressure lb. per sq. in.

p_c = absolute discharge and condenser pressure lb. per sq. in.

$$T = T_s \left(\frac{p_c}{p_s}\right)^{0.431}.$$

$$H = H_c + C_p (t - t_c).$$

The work to be performed on the medium per lb. circulated is:

$$W = 777.6\ (H - H_s)\ \text{ft.-lb.}$$

The values of H and H_s for ammonia may be read direct from a *Mollier* diagram or

FIG. 4. DOUBLE-ACTING COMPRESSOR CYLINDER.

taken from the saturated and superheated tables. As the compression is assumed to take place adiabatically the entropy remains constant.

To determine the value of H refer to the superheated table for pressure p_c and locate the entropy N or s'' (corresponding to the saturated vapor for p_s).

I.hp. of compressor per lb. of the medium circulated per minute $= \dfrac{W}{33{,}000}$.

I.hp. of compressor per ton of refrigeration, 24 hrs. $= \dfrac{M \times W}{33{,}000} = \dfrac{M\ (H - H_s)}{42.5}$. Actual tests give approximately 20 per cent higher results so that for practical purposes the expected

i.hp. compressor per ton of refrigeration $= \dfrac{1.2\ M\ (H - H_s)}{42.5} = \dfrac{M\ (H - H_s)}{35.4}$.

The brake horsepower of the compressor is

$$\text{b.hp.} = \frac{\text{i.hp.}}{0.92\ (\text{mech. eff. compressor})}.$$

If the compressor is to be driven by a motor and either a silent chain or belt drive is employed

$$\text{hp. of motor} = \frac{\text{b.hp. compressor}}{0.90\ (\text{mech. eff. of drive})}.$$

If the compressor is direct connected to a steam engine then

$$\text{engine i.hp.} = \frac{\text{b.hp. compressor}}{0.92\ (\text{mech. eff. of engine})}.$$

The size of steam cylinder required may be calculated or an assumed size checked for the steam pressure to be carried as indicated in the Chapter on "Steam Engines." Corliss engines,

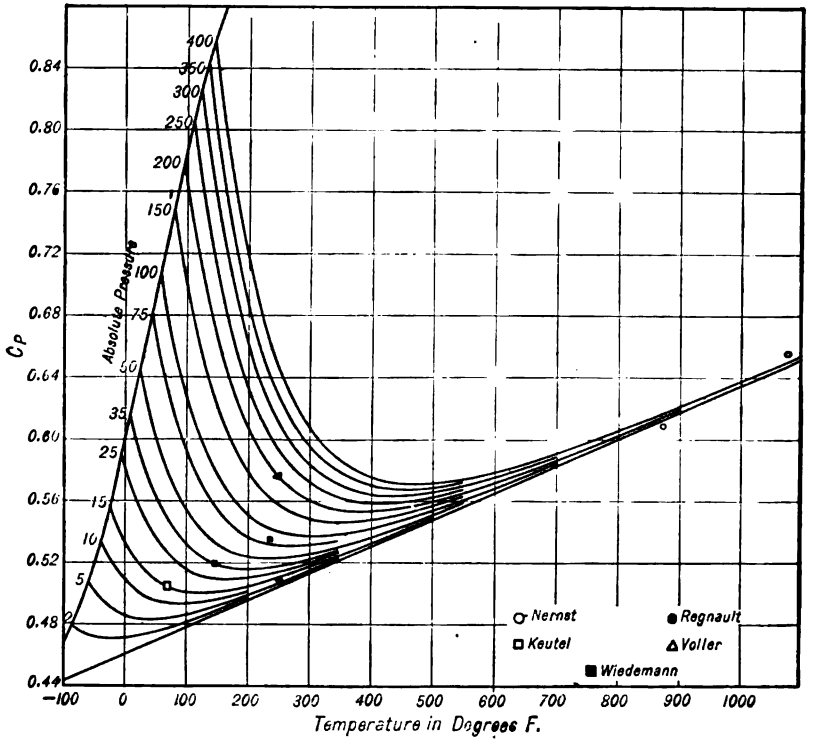

FIG. 5. CURVES SHOWING VALUE OF Cp AT DIFFERENT PRESSURES AND TEMPERATURES
(*Goodenough and Mosher.*)

releasing type gear, are usually employed for this purpose. They are normally rated at ¼ cut off and with a diagram factor of 0.85.

In order to provide for a reduced compressor capacity due to the re-expansion of the vapor on the suction stroke remaining in the clearance space and an increase in the volume of saturated vapor due to superheating while passing through the hot suction ports and passages, it is necessary to divide the volume of saturated gas (G), as previously calculated, by a factor 0.75 to 0.80, the result being the compressor displacement (D) cu. ft. required per minute per ton of refrigeration. 24 hours.

$$D = \frac{G}{0.77}.$$

N = number of working strokes per min.
l = length of stroke, inches.
d = diameter of compressor cylinder, inches.

$N = 2 \times$ r.p.m. for either one single double-acting compressor or two single-acting compressors.

$$\tfrac{1}{4}\pi d^2 \times l \times N = 1728 \times D.$$

$$\text{Piston displacement cu. in. per stroke} = (\tfrac{1}{4}\pi d^2 \times l) = \frac{1728 \times D}{N}.$$

Solve the right-hand member of this equation and choose the cylinder size required from the manufacturer's tables.

The compressor i.hp. may also be calculated by the following formula in which the exponent $n = 1.3$ for NH_3 gas:

$$\text{Mean effective pressure (m.e.p.)} = p_s \times \frac{n}{n-1}\left[\left(\frac{p_c}{p_s}\right)^{\frac{n-1}{n}} - 1\right] \text{ lb. per sq. in.}$$

$$\text{Theoretical compressor i.hp.} = \frac{\text{m.e.p.} \times M \times v_s}{33{,}000}.$$

The following table, giving the mean effective pressure for various suction and condenser pressures was taken from a machine builder's catalog:

TABLE 5

INDICATED MEAN EFFECTIVE PRESSURES IN AMMONIA COMPRESSORS

(Pressures are gage)

		CONDENSER								
EVAPORATOR P_s	P_c	103	115	127	139	153	168	184	200	218
	T_c	65°	70°	75°	80°	85°	90°	95°	100°	105°
4	−20°	41.46	43.91	46.34	48.77	51.23	53.68	56.11	58.54	60.99
6	−15°	42.72	45.38	47.90	50.74	53.40	56.08	58.86	61.40	64.08
9	−10°	44.40	47.38	50.33	53.29	56.25	59.20	62.16	65.14	68.09
13	− 5°	45.86	49.15	52.42	55.70	58.97	62.25	65.53	68.81	72.08
16	0°	46.94	50.56	54.16	57.78	61.40	65.00	68.62	72.22	75.84
20	5°	47.74	51.73	55.70	59.68	63.67	67.66	71.62	75.61	79.81
24	10°	48.04	52.40	56.77	61.13	65.51	69.86	74.24	78.59	82.97
28	15°	47.88	52.67	57.44	62.23	67.02	71.81	76.60	81.39	86.18
33	20°	47.08	52.30	57.53	62.75	67.98	73.23	78.46	83.68	88.91
39	25°	45.06	51.34	57.05	62.75	68.46	74.17	79.88	85.58	91.29
45	30°	43.16	49.71	55.92	62.14	68.35	74.56	80.77	86.98	93.19
51	35°	40.52	47.26	54.02	60.76	67.52	74.28	81.02	87.78	94.52

Back Pressures to be Carried. The average temperature and corresponding back pressure of the expanding ammonia in the evaporating coils to maintain various temperatures in either a brine tank or cold storage room are given approximately by the following table. It is assumed that the tank or room has sufficient coil surface:

TABLE 6

PRESSURES AND TEMPERATURES IN AMMONIA EVAPORATING COILS

(*F. E. Matthews*)

Temperature room °F.	5	10	15	20	28	32	36	40	50	60
Back pressure gage	6.9	8.6	11.8	15.3	21.6	25.1	27	30	35.2	40
Temperature ammonia °F.	−13	−10	− 5	0	8	12	14	17	22	26

FIG 6. SMALL TWO-CYLINDER, SINGLE-ACTING, BELT-DRIVEN AMMONIA COMPRESSOR.

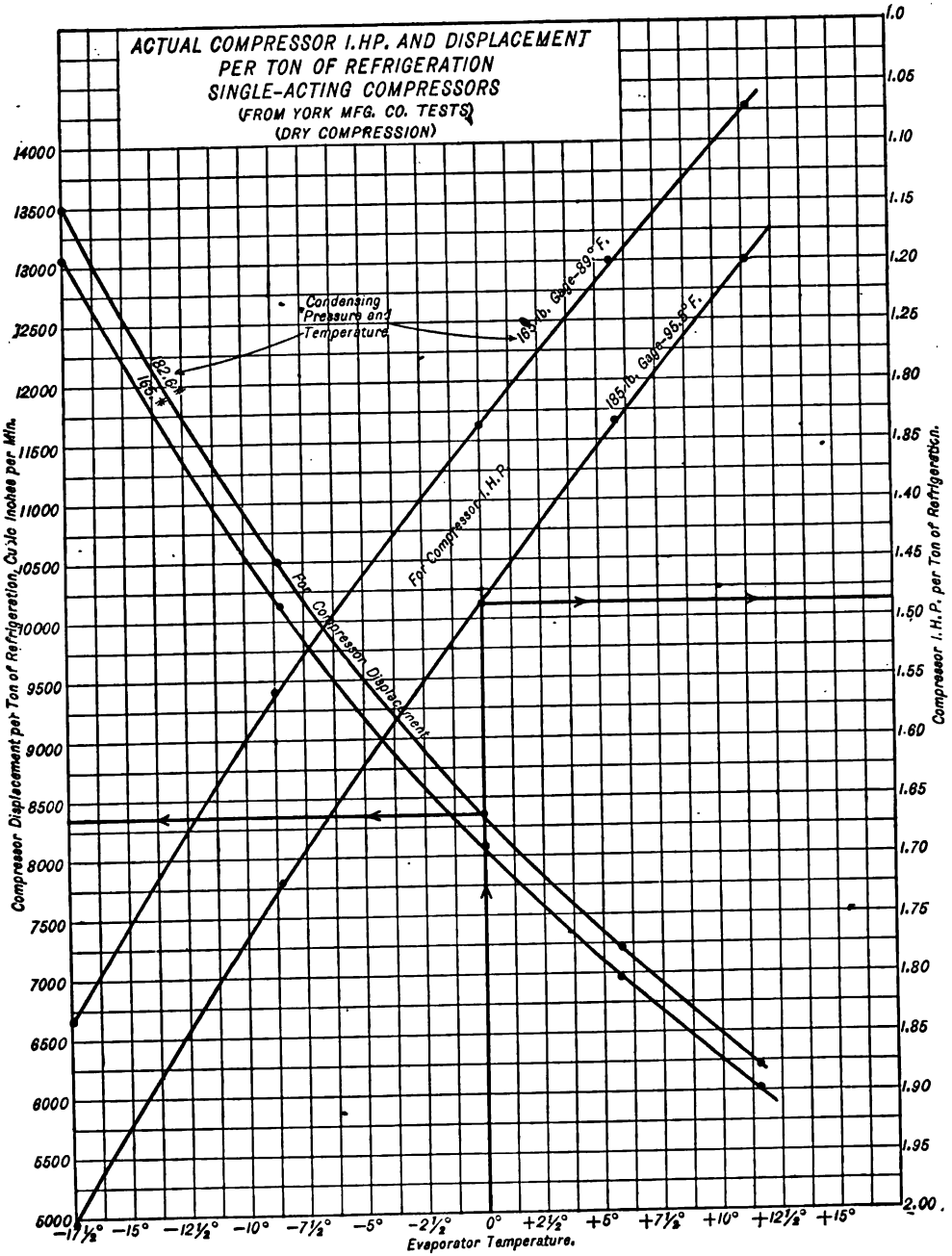
ACTUAL COMPRESSOR I.HP. AND DISPLACEMENT
PER TON OF REFRIGERATION
SINGLE-ACTING COMPRESSORS
(FROM YORK MFG. CO. TESTS)
(DRY COMPRESSION)
Condensing Pressure and Temperature
182.6#
165.#
165 lb. Gage-89.0° F.
185 lb. Gage-95.8° F.
For Compressor I.H.P.
For Compressor Displacement
Compressor Displacement per Ton of Refrigeration, Cubic Inches per Min.
Compressor I.H.P. per Ton of Refrigeration.
Evaporator Temperature.
14000
13500
13000
12500
12000
11500
11000
10500
10000
9500
9000
8500
8000
7500
7000
6500
6000
5500
5000
1.0
1.05
1.10
1.15
1.20
1.25
1.30
1.35
1.40
1.45
1.50
1.55
1.60
1.65
1.70
1.75
1.80
1.85
1.90
1.95
2.00
−17½° −15° −12½° −10° −7½° −5° −2½° 0° +2½° +5° +7½° +10° +12½° +15°

FIG. 7.

The following table gives the sizes and refrigerating capacities of *York Mfg. Co.* standard vertical, single-acting, two-cylinder machine.

The capacities at which the machines are rated are based on 15.67 pounds back pressure (gage) and 185 pounds condensing pressure (gage).

TABLE 7

SIZE AND CAPACITIES OF YORK MFG. CO. SINGLE-ACTING VERTICAL MACHINES

Compressor		Engine		Capacity Tons Refrigeration	R.P.M.	Horsepower of Engine
Bore	Stroke	Bore	Stroke			
7½	10	11½	10	10	95	18
9	12	13½	12	20	110	35
11½	15	16	15	35	94	60
12½	18	18	18	40	76	69
14	21	20	21	65	84	111
16	24	24	24	90	78	154
18	28	26	28	125	74	214
21	32	28½	32	175	66	300
24	36	34	36	250	64	427
27	42	36	42	350	61	598
30	48	44	48	500	62	855

The following table gives the sizes and refrigerating capacities of *York Mfg. Co.* standard double-acting, horizontal machines.

The capacities at which the machines are rated are based on 15.67 pounds back pressure (gage) and 185 pounds condensing pressure (gage).

TABLE 8

SIZE AND CAPACITIES OF YORK MFG. CO. DOUBLE-ACTING HORIZONTAL MACHINES

Compressor		Engine		Capacity, Tons Refrigeration	R.P.M.	Horsepower of Engine
Bore	Stroke	Bore	Stroke			
7½	14	10	18	14.5	112	28.3
9½	18	12	22	25.9	97	50.0
10½	20	13½	24	32.2	89	63.0
11½	22	14	26	40.6	85	79.5
12½	24	16	28	50.6	82	99.0
13½	26	16	30	62.3	80	121.9
15½	30	20	34	92.4	78	180.8
17½	34	22	38	126.7	74	248.2
19½	38	26	42	168.7	71	330.1
21½	42	28	48	220.0	69	429.5
24½	48	32	54	303.1	64	592.3

For larger capacities than the above the machines are built with duplex compressors using a combination of any two of the above compressors, driven by simple, tandem or cross-compound engines. This same combination can be used for any size when required.

Comparison of Single- and Double-acting NH_3 Machines Operating "Dry Compression." Table 9, following, gives a comparison of the results obtained by the *York Mfg. Co.* in their testing plant (up to January 1, 1906), on both single and double-acting machines, the compressor cylinder in each case being 12½" x 18".

The better results (i.hp. per ton of refrigeration) obtained with the single-acting machine are attributed to the difference in the design of the suction valves in the two types of machines. The suction valve of a double-acting machine being small and having a much more contracted area compared with the large valve located in the piston of the single-acting machine, the prob-

ability of increased superheating effect of the gas during the suction stroke of the double-acting machine is quite apparent. The initial volume to be compressed is thus increased with a consequent increase in power consumption.

The following table will be found convenient in checking the size and speed of NH_3 compressors that may be proposed for various installations.

TABLE 9

DISPLACEMENT AND HORSEPOWER PER TON OF REFRIGERATION

Single- (S.A.) and Double-acting (D.A.) Ammonia Compressors Dry Compression
(*York Mfg. Co.*)

Condenser Gage Press. and Corresp. Temp. Temp. of Liquid at Expansion Valve	Suction Gage Pressure and Corresponding Temperature														
	5 Lb. = − 17.5° F.			10 Lb. = − 8.5° F.			15.67 Lb. = 0° F.			20 Lb. = 5.7° F.			25 Lb. = 11.5° F.		
	Volumetric Efficiency % of Displacement.	Cu. In. Displacement per Min. per Ton of Refrig'n.	I.HP. per Ton (Comp.)	Vol. Eff.	Cu. In. Disp.	I.HP. per Ton (Comp.)	Vol. Eff.	Cu. In. Disp.	I.HP. per Ton (Comp.)	Vol. Eff.	Cu. In. Disp.	I.HP. per Ton (Comp.)	Vol. Eff.	Cu. In. Disp.	I.HP. per Ton (Comp.)
145 Lb. 82° F. S. A.	79.	12608	1.654	81.2	9811	1.4	83.	7829	1.195	84.2	6765	1.065	85.5	5836	.943
145 Lb. 82° F. D. A.	68.	14465	1.927	80.5	11300	1.612	73.	8901	1.358	74.7	7625	1.2	76.5	6522	1.054
165 Lb. 89° F. S. A.	77.5	13045	1.834	79.7	10148	1.56	81.5	8092	1.341	82.7	6990	1.201	84.	6027	1.071
165 Lb. 89° F. D. A.	66.5	15203	2.137	69.	11720	1.802	71.5	9224	1.529	73.2	7898	1.357	75.	6751	1.2
185 Lb. 95.5° F. S. A.	76.	13491	2.013	78.2	10487	1.72	80.	8362	1.4865	81.2	7219	1.336	82.5	6223	1.197
185 Lb. 95.5° F. D. A.	65.	15774	2.354	67.5	12150	1.993	70.	9555	1.7	71.7	8176	1.513	73.5	6985	1.344
205 Lb. 101.4° F. S. A.	74.5	13947	2.192	76.7	10834	1.879	78.5	8630	1.631	79.7	7450	1.47	81.	6420	1.323
205 Lb. 101.4° F. D. A.	63.5	16362	2.571	66.	12590	2.184	68.5	9890	1.87	70.2	8459	1.67	72.	7222	1.488

NOTE:—The above efficiencies and displacements apply when the clearance does not exceed $^1/_{32}$ inch.

Unless clearance is excessive no addition to the horsepower will be necessary.

Where liquid is cooled lower than temperature corresponding to condensing pressure, there will be a reduction in horsepower and displacement proportionally to the increase of work done by each pound of liquid handled.

For engine horsepower add 17% to the compressor horsepower up to 20 tons capacity and 15% for larger machines.

Wet Compression. In the wet compression system (Fig. 8) a sufficient quantity of the liquid is by-passed from the liquid line back into the suction line of the compressor, so that at the end of compression the vapor will be dry and saturated ($x = 1$).

Let x_2 = part that is vapor in one pound of the mixture at the beginning of compression.

r_s = latent heat for temperature t_s.

Then $W = 778\,[H_c - (q_s + x_2 r_s)]$ ft.-lb. of work per lb. of medium circulated.

i.hp. per ton refrigeration, 24 hours $= \dfrac{M \times W}{33{,}000}$.

As the entropy is constant for an adiabatic change, the value of x_2 required may be found by using the entropy tables for the vapor under consideration. Then $1 - x_2$ = the weight per lb. of the vapor circulated that reaches the evaporating coils and produces useful refrigeration.

Let n_s = entropy of the liquid corresponding to t_s.

$\dfrac{r_s}{T_s}$ = entropy of vaporization corresponding to t_s.

N_c = entropy of the vapor corresponding to condenser temperature t_c.

FIG. 8. COMPLETE INSTALLATION AMMONIA COMPRESSION SYSTEM. (WET COMPRESSION.)

Then $n_s + \frac{x_2 r_s}{T_s} = N_c$ and $x_2 = \frac{T_s}{r_s}(N_c - n_s)$.

The following table of tests made by the *York Mfg. Co.* gives a comparison of the results obtained operating with *wet* and *dry* compression, the double-acting machine being used for the purpose. The pressure conditions for both tests were the same, namely, 185 lb. (gage) compression pressure and 15.67 lb. (gage) suction pressure. The table gives the average results of six wet and six dry compression runs of six hours each, the wet and dry runs alternating.

TABLE 10

	Wet Compression	Dry Compression
Tonnage refrigeration (brine cooling)	20.94	20.47
Total Indicated Horsepower of compressor	42.88	32.83
Total Indicated Horsepower of engine	49.51	36.16
Friction in per cent of engine horsepower	13.39	9.19
Compressor Indicated Horsepower per ton of refrigeration	2.066	1.603
Engine Indicated Horsepower per ton of refrigeration	2.368	1.766

Example. Required the size of ammonia compressor cylinders for a two-cylinder single-acting machine and compressor, and the i.hp. to produce 40 tons of refrigeration per 24 hours, operating with dry compression. Condensing pressure, 182.6 lb. gage, corresponding temperature 95° for liquid entering evaporating coils; suction pressure, 15.25 lb. gage corresponding to a temperature of 0° F. for the saturated gas leaving the evaporating coils.

The "refrigerating effect" of 1 lb. of ammonia for the conditions stated will be:

$$R_1 = H_s - q_c = 538.5 - 71.3 = 467.2 \text{ B.t.u. per lb.}$$

The amount of ammonia to be circulated per minute per ton of refrigeration is

$$\frac{200}{467.2} = 0.428, \text{ say } 0.43 \text{ lb.}$$

Compressor Displacement Required. The specific volume of the gas leaving the evaporating coils from ammonia table for 0° is 9.19 cu. ft. The volume of saturated vapor to be pumped per minute per ton of refrigeration, 24 hours is:

$$0.43 \times 9.19 = 3.95 \text{ cu. ft. and for 40 tons} = 40 \times 3.95 = 158 \text{ cu. ft.}$$

The piston displacement required per minute per ton is $\frac{3.95}{0.77} = 5.1$ cu. ft. or 8813 cu. in. For 40 tons it is 204 cu. ft. per min.

Assume a stroke of 18 in. and a rotative speed of 76 r.p.m. Area, each compression cylinder = $\frac{204 \times 144}{2 \times 76 \times 1.5} = 129$ sq. in. or 12.7 in. diameter. The nearest standard size, single-acting compressor, is 12½" x 18". (See Table 6.)

Compressor i.hp. The work to be performed per lb. of NH_3 is 778 $(H - H_s)$ ft.-lb. in which

$$H = H_c + C_p (t - t_c).$$

The absolute temperature at the end of compression is;

$$T = 460 \left(\frac{197.3}{29.95}\right)^{0.22} = 710° \text{ F. } \therefore t = 710 - 460 = 250.$$

From the diagram, Fig. 5, the mean specific heat for a temperature range 95° to 250° is $C_p = 0.67$ (approximate). $H = 559.8 + 0.67\ (250 - 95) = 663.5$. The same result is obtained from the superheated ammonia table for an entropy of vapor 1.174.

$$\text{Theoretical i.hp. per ton} = \frac{0.43\ (663.5 - 538.5)}{42.5} = 1.26.$$

$$\text{Expected i.hp. of compressor} = 40 \times 1.26 \times 1.20 = 60.5.$$

The combined mechanical efficiency of engine and compressor will average about 85 per cent.

The engine i.hp. required is $\frac{60.5}{0.85}$ or 71.

Compare piston displacement and compressor i.hp. per ton with data, Table 9.

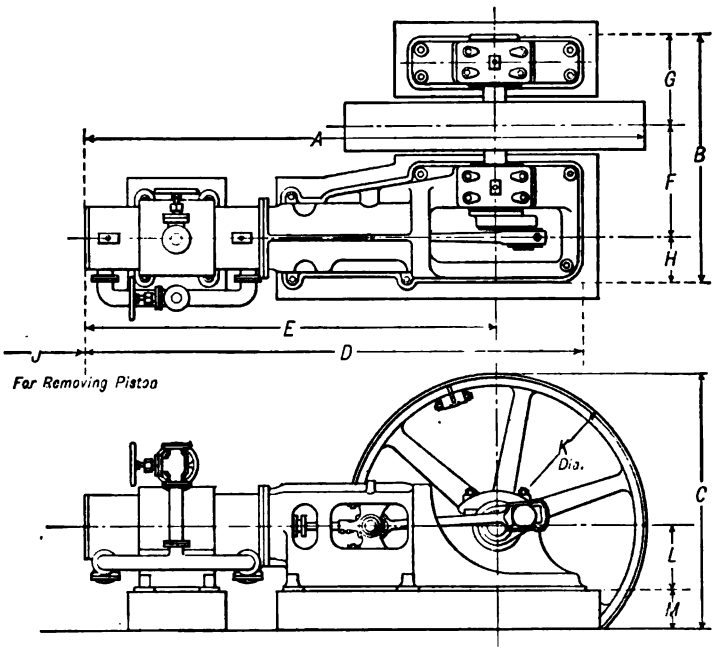

FIG. 9. DOUBLE-ACTING ARCTIC AMMONIA COMPRESSOR.

TABLE 11

GENERAL DIMENSIONS ARCTIC HORIZONTAL REFRIGERATING MACHINE (Fig. 9)

Belt Driven

Compressor		Suction Pipe	Discharge Pipe	A	B	C	D	E	F	G	H	J	K	L	M
Diam.	Stroke														
7....	10 1/2	2	1 1/2	9-1 1/2	4-7 5/8	4- 8	8-3	6-9 1/2	24 5/8	21	10	2- 7	4-8	13	15
9....	13 1/2	2 1/2	2	11-5	5-2	5- 6	10-2 3/4	8-5	2- 3 1/4	23	11 3/4	3- 1	6-0	16	14
10 1/2...	15 3/4	3	2 1/2	13-9	6-2 3/8	5- 9	12-3 3/4	10-3	2- 9	2-3 3/8	14	3- 9	7-0	19	8
12....	18	3 1/2	3	17-0	6-7 3/8	8- 6	13-3 3/4	11-0	2-11 5/8	2-5 1/4	14 1/2	3-11	12-0	21	9
14....	21	4 1/2	3 1/2	20-8 1/2	8-4 5/8	10- 6	15-9 3/4	13-2 1/2	3- 9 1/4	3-2 1/8	16 3/4	4- 8	15-0	2- 1	11
15....	22 1/2	4 1/2	3 1/2	21-0 1/2	8-4 5/8	10- 6	16-1 3/4	13-6 1/2	3- 9 1/4	3-2 1/2	16 3/4	4-10	15-0	2- 1	11
17....	25 1/2	5	4	23-3 1/2	11-1	10-10	19-1 1/4	15-9 1/2	5- 3 1/2	4-2 1/4	19 1/4	5- 7	15-0	2- 6	10
18....	27	6	4 1/2	23-7 1/4	11-1	10-10	19-5	16-1 1/4	5- 3 1/2	4-2 1/4	19 1/4	5- 8	15-0	2- 6	10

NOTE—Standard belt wheel dimensions are given—wheel can be changed to suit conditions.

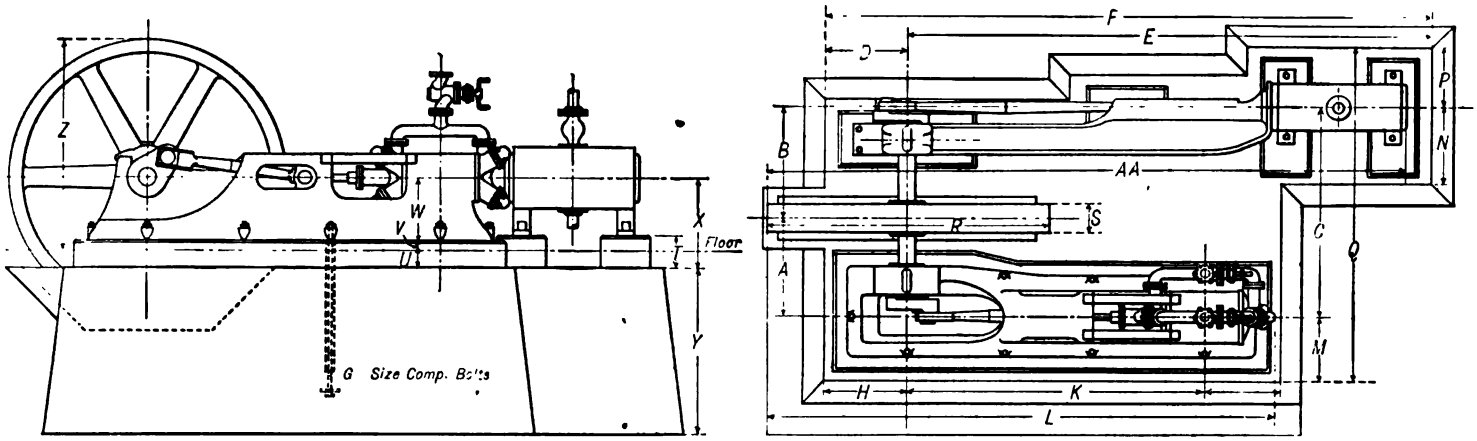

FIG. 10. DOUBLE-ACTING TRIUMPH AMMONIA COMPRESSOR.

TABLE 12

DIMENSIONS FOR TRIUMPH COMPRESSORS WITH CORLISS ENGINES (Fig. 10)

Comp. / Engine	9 x 18 / 10 x 30	10 x 18 / 12 x 30	11 x 20 / 12 x 36	12 x 20 / 14 x 36	12 x 24 / 14 x 42	13 x 24 / 16 x 36	13 x 30 / 16 x 42	14 x 30 / 18 x 42	15 x 30 / 18 x 42	16 x 30 / 20 x 42	17 x 30 / 22 x 42	18 x 32 / 22 x 48	18 x 36 / 24 x 48	24 x 36 / 26 x 54
A	3′- 0″	3′- 0″	3′- 0″	3′- 6″	3′- 6″	3′- 6″	3′- 8″	4′- 3″	4′- 3″	4′- 6″	4′- 9″	5′- 0″	5′- 4″	5′- 7″
B	3 - 0″	3′- 9″	3′- 1 1/2″	4′- 0″	4′- 0″	4′- 0″	4′- 4″	4′- 3″	4′- 3″	4′-10″	4′- 9″	5′- 0″	5′- 4″	5′- 7″
C	6′- 0″	6′- 9″	6′- 1 1/2″	7′- 6″	7′- 6″	7′- 6″	8′- 0″	8′- 6″	8′- 6″	9′- 4″	9′- 6″	10′- 0″	10′- 8″	11′- 2″
D	2′- 2″	2′-11″	2′- 9″	2′-11″	2′-11″	2′-11″	3′- 2″	3′- 2″	3′- 2″	3′- 6″	3′- 6″	3′- 6″	3′- 6″	4′- 0″
E	13′- 9″	16′- 5 1/4″	16′- 2″	16′- 5 3/8″	18′- 7″	16′- 5 3/8″	18′- 8″	18′-10 5/8″	18′-10 5/8″	19′- 1 1/2″	19′- 1 1/2″	21′- 0″	22′- 1″	24′- 0″
F	15′-11″	19′- 4 1/4″	18′-11″	19′- 4 3/8″	21′- 6″	19′- 4 3/8″	21′-10″	22′- 5/8″	22′- 5/8″	22′- 7 1/2″	22′- 7 1/2″	24′- 6″	25′- 7″	28′- 0″
G	1″x54″	1 1/4″x60″	1 1/4″x60″	1 1/4″x60″	1 1/4″x60″	1 1/4″x60″	1 1/4″x72″	1 1/2″x72″	1 1/2″x72″	1 3/4″x78″	1 3/4″x78″	1 3/4″x78″	1 3/4″x84″	1 3/4″x90″
H	2′- 2″	2′-11″	2′- 9″	2′-11″	2′-11″	2′-11″	4′- 0″	4′- 0″	4′- 0″	4′- 2″	4′- 2″	4′- 4″	4′- 6″	4′- 8″
K	10′- 5″	10′- 6″	11′- 3 3/4″	11′- 6 3/4″	13′- 2″	13′ -2″	15′- 6″	15′- 6″	15′- 7″	17′- 2″	17′- 2″	18′- 0″	18′- 9″	18′- 9″
L	13′- 6″	14′- 0″	15′- 4″	16′- 4″	18′- 2″	18′- 2″	21′- 9″	22′- 9″	22′- 9″	24′- 3″	24′- 9″	2-′- 6″	26′-10″	27′-10″
M	1′- 9 1/2″	1′- 8 1/2″	2′- 3″	2′- 3″	2′- 3 1/2″	2′- 3 1/2″	2′- 4 1/2″	2′- 8″	2′- 8″	2′-11″	2′-11″	3′- 2″	3′- 4″	3′- 8″
N	2′- 6″	2′-10″	2′-10″	3′- 3/8″	3′- 3/8″	3′- 3/8″	3′- 1 1/2″	3′- 1 1/2″	3′- 1 1/2″	3′- 7″	3′- 7″	3′- 7″	3′-11 3/4″	4′- 1″
P	1′-11″	1′-10 1/2″	2′- 1″	2′- 2 3/8″	2′- 2 3/8″	2′- 2 3/8″	2′- 4 1/4″	2′- 4 1/4″	2′- 4 1/2″	2′- 7″	2′- 7″	2′- 7″	3′- 3/4″	4′- 6″
Q	9′- 8 1/2″	10′- 4″	10′- 5 1/2″	11′-11 3/4″	12′- 1/8″	12′- 1/8″	12′- 8 3/4″	13′- 6 1/4″	13′- 6 1/4″	14′-10″	15′- 0″	15′- 9″	17′- 3/4″	19′- 4″
R	6′- 0″	7′- 0″	8′- 0″	10′- 0″	12′- 0″	12′- 0″	12′- 0″	14′- 0″	14′- 0″	14′- 0″	15′- 0″	16′- 0″	16′- 0″	18′- 0″
S	10″	10″	12″	12″	12″	12″	12″	12″	12″	12″	12″	12″	14″	14″
T	11″	8″	8″	7 1/2″	12″	10 1/2″	11″	10″	10″	12″	10″	12″	12″	16″
U	5″	3″	5″	5″	5″	5″	5″	8″	8″	7″	5″	5″	5″	5″
V	5″	8″	5″	5″	5″	5″	5″	5″	5″	5″	5″	5″	5″	5″
W	21″	22″	23″	23″	27 1/2″	27 1/2″	28″	29″	29″	30″	30″	32″	34″	38″
X	30 7/8″	33″	33″	33″	37 1/2″	37 1/2″	38″	42″	42″	42″	40″	42″	44″	48″
Y	4′- 0″	5′- 0″	5′- 0″	5′- 0″	6′- 0″	6′- 0″	6′- 0″	6′- 0″	6′- 0″	6′- 6″	7′- 0″	7′- 6″	8′- 0″	8′- 6″
Z	5′- 5 1/2″	6′- 0″	6′- 4″	7′- 4″	7′- 8 1/2″	7′- 8 1/2″	8′- 9″	9′-10″	9′-10″	9′-11″	10′- 5″	11′- 1″	11′- 3″	12′- 9″
AA	16′- 1 1/8″	19′- 6″	19′- 4 5/8″	20′- 7 7/8″	22′- 9 3/8″	20′- 9 1/2″	23′-10 5/8″	25′- 2 3/8″	25′- 2 3/8″	25′- 4 1/4″	25′-11 1/4″	28′- 6 3/4″	28′-11 3/8″	32′- 3 3/4″

ELEVATION

SYMBOL	COMPRESSORS		ENGINE		CU. IN. PER REV.	DIAM. SHAFT	FLY WHEEL	
	Bore	Stroke	Bore	Stroke			Diam.	Weight
A1	6½	10	9	10	614	4½	4-0	2200
A2	7½	10	9	10	884	4½	" "	3200
A3	8½	15	12	15	1804	6	6-9	2700
A	8½	18	12	18	1924	6	"	4000
B	9½	13	14	18	2619	6½	"	5000
C	11	13	16	18	3421	7½	"	6500
D	12½	13	18	18	4418	8½	"	8000
F	13½	24	20	24	7128	9	9-0	11500
H	16½	24	24	24	10262	10½	"	17000
J	18	30	26	30	15270	11½	11-2	21600
L	20½	30	30	30	20300	13	"	28000
N	22	36	32	36	27440	13½	13-4	35000
P	25	36	36	36	35350	15½	"	44000
S	27½	42	40	42	49900	17	15-6	57000
V	30½	48	44	48	69000	18½	17-8	72000

PLAN

DIMENSIONS									STEAM	EXH	AMM	Symbol
A	B	C	D	E	F	G	H	J				
7-11½	5-7	5-8	3-2	5-1½	4-0	—	13½	—	2	2½	1½	A1
7-11½	5-8	6-5	3-3	5-1½	4-10	—	13½	—	2	3	1½	A2
11-0	7-1½	9-1	3-8	7-0½	5-3	3-8	20½	8-2	3	3½	2	A3
11-10	7-1½	9-8½	3-9	7-6½	5-7	3-8	20½	8-3	3	3½	2	A
12-3½	7-9½	10-1½	4-4	7-10	5-10½	4-1	22	8-10	3½	4	2½	B
12-8½	8-8	10-6	4-10	7-11½	6-2	4-6	23½	9-10	3½	4½	3	C
13-2½	9-8	11-1	5-6	8-3½	6-4½	4-11	25	11-0	4	5	3	D
15-1½	10-3½	13-8	5-9½	9-7½	7-3½	5-1	26½	11-10	4½	6	3½	F
16-4	12-0	14-7	7-0	10-4	7-10	5-2	29½	14-0	6	7	4	H
19-0	12-11	16-11	7-5	11-1½	8-10	6-7	31	15-5	6	8	5	J
20-2	15-0	17-6	8-8	12-9	9-6	7-5	34	17-2	8	9	6	L
22-2½	15-9	20-3	9-0	14-0½	10-7	7-9	35½	18-0	8	10	6	N
23-6	17-6½	21-3	10-3½	14-10	11-4	8-7	38½	20-3½	9	12	7	P
26-2	19-4	24-1	11-9	16-6	12-6½	9-5	41½	22-2	10	12	8	S
29-3	21-0½	27-0	12-1	18-3½	13-10	10-2½	44½	24-1	12	14	9	V

FIG. 11. DIMENSIONS FOR TWO-CYLINDER, SINGLE-ACTING COMPRESSORS, ENGINE DRIVEN.

CHAPTER XXVII

VACUUM MACHINES

General. The principle involved in the operation of a vapor vacuum machine is similar to that used in the compression system described. The refrigerating or cooling effect is produced by the evaporation of a part of the liquid; water in this case. The evaporation of the water is obtained by producing and maintaining a vacuum corresponding to the vapor tension of the liquid in

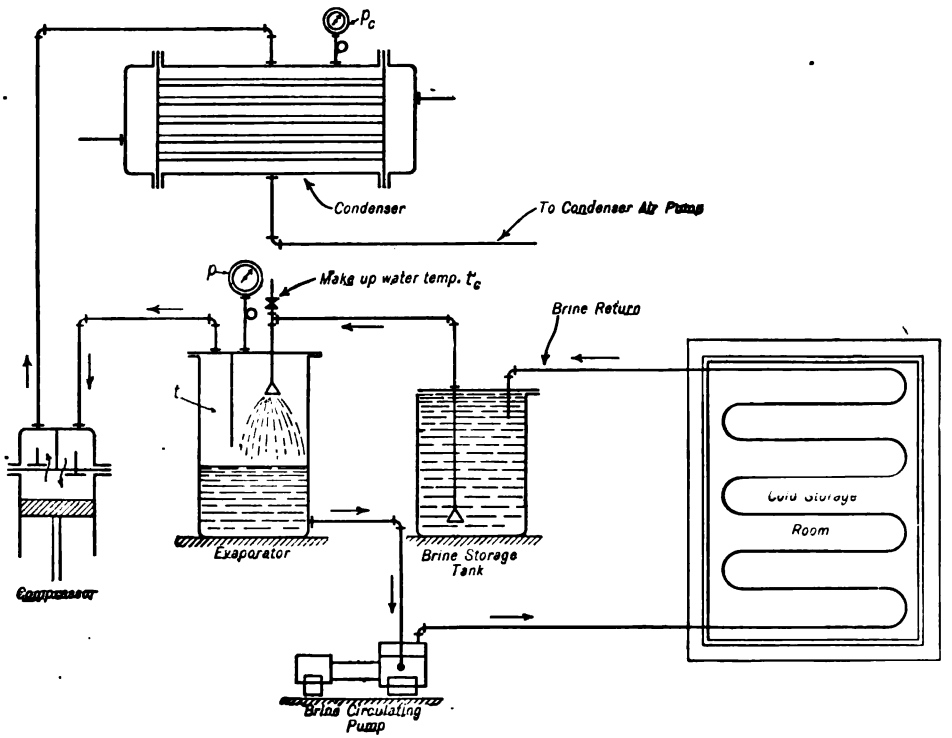

FIG. 1. DIAGRAM OF VAPOR VACUUM SYSTEM.

the evaporator at the desired temperature. It is obvious that heat must be supplied in order to change the liquid into vapor. If this heat is not obtainable from an external source it will be removed from the liquid which must consequently become cold if the operation is continued.

Theoretical Principles Involved. Referring to Fig. 1:

Let t = temperature to be maintained in evaporator.

p = pressure of saturated water vapor corresponding to t.

p_c = condenser pressure.

t_c = temperature of make-up water.

H = total heat corresponding to t.
q_c = heat of liquid corresponding to t_c.
Refrigerating effect per lb. of water evaporated is:

$$R = H - q_c \text{ B.t.u.}$$

Weight of water to be evaporated per min. to produce one ton of refrigeration per 24 hours:

$$M = \frac{200}{R}.$$

Volume of vapor to be removed from evaporator per min. per ton of refrigeration, $V = M \times v$, in which v is the specific volume of saturated vapor corresponding to t.

The work required of the vacuum pump or compressor may be approximated by the following formulae; assuming adiabatic compression of the vapor,

$$\text{m.e.p.} = p \times \frac{n}{n-1}\left[\left(\frac{p_c}{p}\right)^{\frac{n-1}{n}} - 1\right] \text{ lb. per sq. in.}$$

per cu. ft. of piston displacement. The value of n may be assumed approximately equal to 1.133. The theoretical i.hp. of compressor per ton of refrigeration, 24 hours, is:

$$\text{i.hp.} = \frac{\text{m.e.p.} \times V \times 144}{33{,}000}.$$

In addition is the power required by the condenser air pump along with the frictional losses of the two machines.

Owing to the enormous size of the vacuum pump required to handle the volume of vapor at the very low pressures required in the evaporator, this machine never attained commercial practicability until the advent of the *Leblanc* air pump later described.

Example. Required the weight of vapor M to be evaporated, the volume of vapor to be handled by the compressor, and the theoretical horsepower to produce one ton of refrigeration per 24 hours for the following conditions of operation.

Evaporator temperature $t = 32°$ F.; pressure $p = 0.0886$ lb.
Condenser temperature $t_c = 80°$ F.; pressure $p_c = 0.505$ lb. Corresponding to 28.9″ vacuum.

$H = 1073.4$; $q_c = 48.03$; $R = H - q_c = 1025.4$; $M = \frac{200}{1025.4} = 0.195$ lb. per min.; $V = 0.195 \times 3294 = 632$ cu. ft. per min.;

$$\text{compressor m.e.p.} = 0.0886 \times \frac{1.133}{0.133}\left[\left(\frac{0.505}{0.0886}\right)^{0.117} - 1\right] = 0.17 \text{ lb. sq. in.}$$

$$\text{Theoretical compressor i.hp.} = \frac{0.17 \times 632 \times 144}{33{,}000} = 0.47.$$

The amount of air leaking into the system through the joints and that which comes in with the make-up water cannot be accurately estimated. It is probably a safe assumption, however, that the power required to remove the air from the condenser will amount to at least 50 per cent. of the compressor i.hp.

Vacuum machines have been constructed on the principle of absorbing the greater portion of the water vapor as it leaves the evaporator by passing the vapor through sulphuric acid, thus greatly relieving the work of the vapor vacuum pump.

The acid, however, soon becomes weak by dilution and must be concentrated by boiling off the water. An installation of this type may be divided into two parts: (a) The refrigerating apparatus proper, consisting of the evaporator, absorber air or vapor pump and condenser. (*b*) The acid concentrating plant, consisting of a concentrator, acid still, heat exchanges, acid pumps and air pump.

The cold, weak acid from the absorber is pumped through the heat exchanger, in which the temperature of the strong acid from the hot concentrator is materially reduced before passing back into the absorber, the heat required in the concentrator to boil off the water being supplied by a steam coil.

On account of the expense involved to dissociate and evaporate the water from the acid, and other objections, this type of refrigerating apparatus has found small favor.

The Westinghouse-Leblanc Machine. In the Westinghouse-Leblanc machine the evapora-

1. Moisture Separator
2. Automatic Pressure Regulating Valve
3. Automatic Shut-off Valve
4. Vacuum Connection to Ejector
5. Ejector
6. Condenser
7. Air Pump Suction
8. Westinghouse-Leblanc Air Pump
9. Air Pump Discharge
10. Water Pipe to Air Pump
11. Regulating Valve
12. Circulating Pump
13. Water Inlet
14. Non-return Valve
15. Circulating Water Inlet
16. Circulating Water Discharge
17. Regulating Valve
18. Water Pipe to Cooling Coil
19. Discharge from Cooling Coil
20. Cooling Coil
21. Evaporator
22. Brine Inlet
23. Regulating Valve
24. Brine Pipe
25. Vapor Suction Pipe
26. Brine Pump Suction
27. Brine Pump
28. Non-return Valve
29. Brine Discharge
30. Brine Tank
31. Strainer
32. Overflow
33. Make-up Water Inlet
34. Regulating Valve
35. Air Pump Water Tank
36. Overflow to Boiler Feed
37. Return Pipe for Brine
38. Electric Motor or Turbine

FIG. 2. DIAGRAMMATIC ARRANGEMENT OF WESTINGHOUSE-LEBLANC REFRIGERATING MACHINE FOR HIGH BRINE TEMPERATURE, USING A SURFACE CONDENSER. THIS APPARATUS IS SUITABLE FOR COOLING WATER AND OTHER LIQUIDS.

tion is accomplished by a combination of steam ejector or ejectors and condensing plant, consisting of the following (Fig. 2):

(1) Ejector or ejectors to remove the vapor and air from the evaporator corresponding to the compressor in Fig. 1.

(2) Condenser (either surface or jet type).

(3) Leblanc air pump (Fig. 3) which removes both the condensate and non-condensible gases from condenser.

(4) Brine circulating pump.

(5) Condensing water circulating pump.

(6) Motor or motors for driving pumps.

The operation of the machine is as follows:

Brine is drawn from the evaporator 21 from the brine tank 30, the quantity of brine being regulated by the gate valve 23. Inside of the evaporator, in which a high vacuum is maintained, the brine passes through a perforated plate and is broken up into a fine spray, which falls to the bottom of the evaporator. Part of the spray is evaporated, the necessary heat for this evaporation being abstracted from the part which remains. Therefore, the remaining brine has a temperature lower than that at which it entered the evaporator. The cold brine is drawn from the evaporator by the brine pump 27 and delivered to the place where the cold will be used. From there it is returned to the brine tank through the pipe 37 and again circulated through the evaporator as described above. The high vacuum in the evaporator is produced and maintained by a combination of steam ejector 5 with a surface condenser 6 in which the vapors drawn from the evaporator are also condensed.

High pressure or exhaust steam is used for operating the ejector. An automatic shut-off valve 3 prevents the steam from entering the ejector until a sufficiently high vacuum is established. The steam expands through a series of nozzles in the ejector, thus attaining a very high velocity. After leaving the nozzles the steam jets entrain the vapor coming from the evaporator, compressing and discharging it into the surface condenser 6.

The condensing plant consists of the surface condenser 6, the circulating pump 12, the air pump 8, and the air-pump water tank 35.

Either fresh or salt water can be used in the circulating system. The pump 12 draws its supply of water through pipe 13, circulates it through the condenser 6, the discharge leaving

FIG. 3. WESTINGHOUSE-LEBLANC AIR PUMP.

through pipe 16. In marine installations the circulating water would be discharged overboard. On land it might be returned to a cooling tower and used again, or, if water were cheap, it would ordinarily be wasted. In all cases, a small portion of the circulating water is used for cooling the water used by the air pump. This supply is regulated by valve 17.

By referring to cross-sectional view of the air pump (Fig. 3) it will be seen that water enters chamber H through opening I and flows out through orifice N. The impeller W, rotating in a clockwise direction, cuts off layers of water and projects them into the cone C. Between the successive pistons of water, layers of air drawn in through opening P are imprisoned. The high

velocity of these water pistons is transformed into pressure by means of the diffusing cone so the mixture may be discharged against atmospheric or somewhat higher pressure.

As shown by Fig. 2, the water supply for the air pump is drawn from tank 35 through pipe 10, the quantity being regulated by valve 11. The mixture of water, air, and condensed steam is discharged back into tank 35, where the air separates from the water.

It is obvious that the temperature of the water in tank 35 would gradually increase, due to the continual addition of the heat contained in the condensed steam. It is essential that cold water be used in the air pump, therefore a cooling coil 20 is placed in the tank and a portion of the discharge from the circulating pump 12 passed through it.

The circulating, air, and brine pumps are all of the centrifugal type and driven by one electric motor or steam turbine. If turbine driven, the exhaust may be used in the ejector so the total heat of the steam is utilized.

CHAPTER XXVIII

AMMONIA CONDENSERS

Heat Abstracted. The gas leaving the compressor and arriving at the condenser will have the heat content H per lb. Condensation taking place in the condenser at pressures p_c and the liquid will leave with the heat q_c per lb.

The condenser has then abstracted, per lb., the heat

$$H - q_c \text{ or } H_c + c_p (t - t_c) - q_c \text{ or } r_c + c_p (t - t_c),$$

which is the latent heat at final compression pressure plus the superheat of compression. (c_p = the mean specific heat between the temperature t_c and t; t being the final compression temperature, Fig. 5, in the Chapter on "Compression Machines.")

Note. H may be read direct from a "Mollier" diagram or superheated ammonia table, and q_c may be found in the saturated ammonia table.

Amount of Condensing Water Required:

Let t_x = initial temperature, condensing water.

t_y = final temperature, condensing water.

C = lb. condensing water required per lb. of ammonia circulated.

$$c = \frac{H - q_c}{t_y - t_x}.$$

It is usual to assume the initial temperature of the condensing water as approximately 68° to 70° if the source of supply is a reservoir, river or lake, and 55° F. if from an artesian well.

This temperature for the warmest summer months *should be definitely ascertained in advance* for each individual case. The final temperature of the condensing water should be as low as is considered practical, as upon this temperature depends the final temperature of the condensed liquid, and therefore the final compression pressure. Ordinarily this temperature is approximately 80° to 85° F. when the initial temperature is 70°, and the final temperature of the condensed liquid about 95°, which gives a final compression pressure of 182.6 lb. per sq. in. gage, when ammonia is used as the refrigerating medium.

This problem is one of economical operation. Knowing the cost of water per gallon either by purchase of water delivered or cost of pumping the same, then the most economical "head" or compression pressure may be approximately determined if the cost of producing one i.hp. in the compressor cylinder for various head pressures is known.

Example. Required the amount of cooling water, gals. per min. per ton of refrigeration, to be supplied an ammonia condenser for the following assumed conditions of operation. Condensing pressure and temperature, 182.6 lb. gage and 95° F. Suction pressure and temperature, 15.25 lb. gage and 0° F. Initial temperature of circulating water 70°; final temperature, approximately 10° lower than the condensed ammonia or 85° F.

$$M = \frac{200}{H_s - q_c} = \frac{200}{538.5 - 71.3} = 0.428 \text{ lb. of ammonia circulated per ton per min.}$$

Heat rejected to condenser per ton per min. $= M \times (H - q_c) = .428\ (663 - 71) = 253$ B.t.u.

Lb. water per ton per min. $= \frac{253}{85 - 70} = 16.8$ or $\frac{16.8}{8.33} = 2$ gallons per min. per ton of refrigeration, 24 hours, or approximately, $2 \times 1.75 = 3.5$ gals per min. per ton of ice manufactured per 24 hours.

Types of Condensers. There are three types of ammonia condensers in common use, viz., atmospheric, double pipe, and the submerged type.

The atmospheric type (Fig. 1) is recommended, when there are no objections to placing the condenser on the roof or in the open room, on account of their economical use of water and ease of access for repairs or cleaning. The economy in the use of water is due primarily to the cooling effect produced by evaporation (see the Chapter on "Cooling Ponds and Towers").

The double-pipe type (Fig. 2) is recommended where the condensing water is to be used for

FIG. 1. ATMOSPHERIC AMMONIA CONDENSER.

other purposes. The water is under pressure and the absence of drip and dampness makes this type suitable for all locations.

The submerged type, Fig. 3, is usually made up of coils and a circular tank and is not much used except for small machines.

It is essential that the water used in double-pipe condensers be soft with no tendency to form scale.

TABLE 1

DIMENSIONS OF ATMOSPHERIC AMMONIA CONDENSERS

No. of Sections	Capacity in Tons Refrig.	Space Required			Size Pipe, Inches	Length Pipe, Feet	No. of Pipes	Total No. Ft. Pipe	Shipping Weight Pounds
		Length, Feet	Width, Feet	Height, Feet					
1	7½	19½	2	8	1¼	18	20	360	2,300
2.....	15	19½	3	8	1¼	18	40	720	4,600
1. .. .	12½	21½	2	11¾	2	20	24	480	3,200
2.....	25	21½	3½	11¾	2	20	48	960	6,400
3.	37½	21½	5½	11¾	2	20	72	1,440	9,600
4.	50	21½	7¾	11¾	2	20	96	1,920	12,800
6.....	75	21½	12	11¾	2	20	144	2,880	19,200
8. .	100	21½	16	11¾	2	20	192	3,840	[illegible]
12.....	150	21½	24	11¾	2	20	288	5,760	38,400
16. ..	200	21½	32	11¾	2	20	384	7,680	51,200

Double-Pipe Ammonia Condensers. These condensers are usually made twelve pipes high, some builders use ten. The three upper pipes are 2½ inches in diameter, and the nine lower

2 inches. The water pipe is 1¼ or 1½ inches throughout. The use of larger pipes at the top gives a wider annular space between the external surface of the water pipe and the internal sur-

FIG. 2. STANDARD TYPE DOUBLE-PIPE AMMONIA CONDENSER.

face of the ammonia pipe, and thus provides the greater space which is required for the gas when it first comes into the condenser, owing to its rarefied condition. As soon as the cooling influence of the water becomes effective and the ammonia becomes denser, less space is, of course, required.

TABLE 2

DIMENSIONS OF DOUBLE-PIPE AMMONIA CONDENSERS

Capacity, Tons	No. of Secs.	No. of Pipes	Length Pipe, Feet	Total Number Feet, Pipe	Space Required			Shipping Weight
					Length, Feet	Width, Feet	Height, Feet	
1	1	6	8	48	10–6	1–8	6–0	900
2	1	6	12	72	14–6	1–8	6–0	1,100
3	1	8	12	96	14–6	1–8	6–9	1,500
4	1	8	14	112	16–6	1–8	6–9	1,600
5	1	8	16	128	18–6	1–8	6–9	1,700
6	1	10	15	150	17–6	1–8	7–6	1,950
7	1	10	16	160	18–6	1–8	7–6	2,000
8	1	10	17.5	175	20–0	1–8	7–6	2,100
9	1	10	16.5	198	19–0	1–8	8–3	2,400
10	1	12	17.5	210	20–0	3–8	8–3	2,500
12.5	1	12	19	228	21–6	1–8	8–3	2,600
15	1	14	19	266	21–6	1–8	9–0	2,900
15	2	8	17.5	280	20–0	3–4	6–9	3,900
18	2	10	17.5	350	20–0	3–4	7–6	4,500
20	2	10	19	380	21–6	3–4	7–6	4,800
25	2	12	19	456	21–6	3–4	8–3	5,400
30	3	10	18	540	20–6	5–0	7–6	6,800
35	3	12	18	648	20–6	5–0	8–3	7,900
40	4	10	19	760	21–6	6–8	7–6	9,400
45	4	12	17.5	840	20–0	6–8	8–3	10,400
50	4	12	19	912	21–6	6–8	8–3	10,800
55	5	12	17.5	1,050	20–0	8–4	8–3	12,700
60	5	12	18	1,080	20–6	8–4	8–3	12,900

Rating of Atmospheric NH_3 Condensers. The following table will give the amount of pipe per ton of refrigeration usually allowed in atmospheric condensers for water of various temperatures.

TABLE 3 (*J. Lesey.*)

Water Temperature	1-inch Pipe	1¼-inch Pipe	1½-inch Pipe	2-inch Pipe
Degrees F.	Feet	Feet	Feet	Feet
50	60	50	40	31
55	65	55	45	33
60	75	60	50	36
65	80	65	55	40
70	85	70	60	43
75	92	76	67	46
80	98	82	73	50
85	110	90	80	57

The amount of water required per minute per ton of refrigeration in atmospheric condensers at temperatures from 50° to 85° F. as given by *J. Levey*, is as follows:

At 50° F. allow ½ gal. per minute. At 70° F. allow 1 gal. per minute.
At 55° F. allow ⅝ gal. per minute. At 75° F. allow $1^1/_5$ gal. per minute.
At 60° F. allow ¾ gal. per minute. At 80° F. allow $1^1/_2$ gal. per minute.
At 65° F. allow ⅞ gal. per minute. At 85° F. allow 2 gal. per minute.

These quantities are based on water leaving the condenser at 95° F., and are the smallest amount of water that should be allowed.

Submerged condensers should be allowed at least 20 per cent more water than atmospheric condensers.

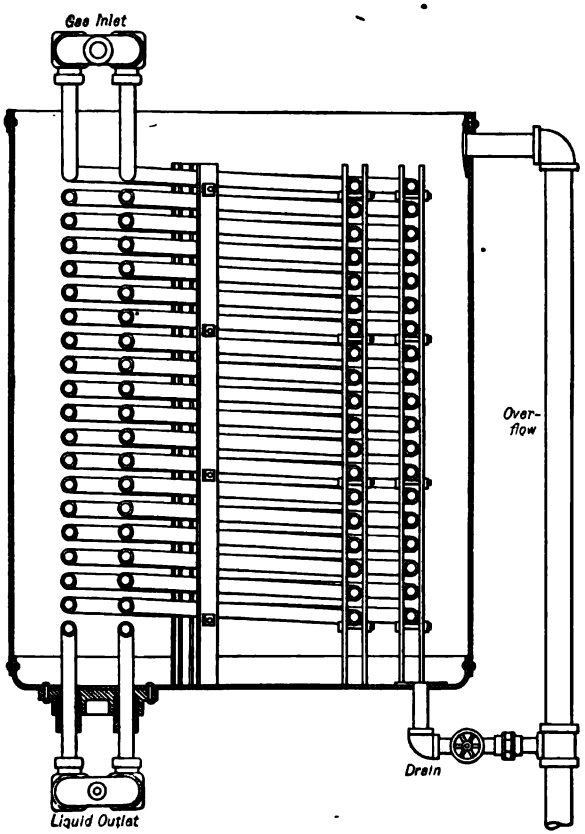

FIG. 3. SUBMERGED TYPE OF AMMONIA CONDENSER.

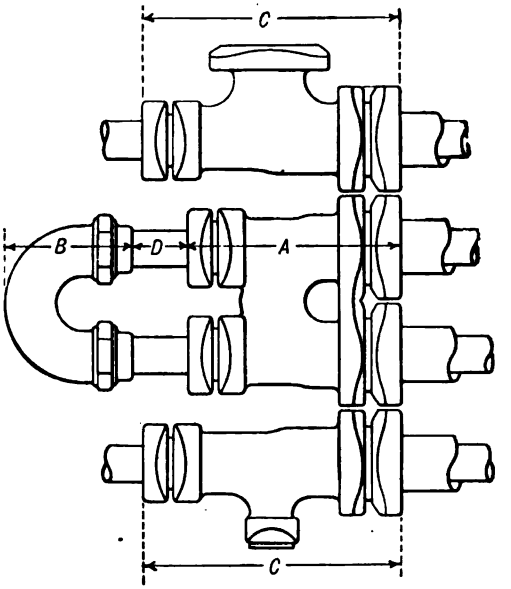

FIG. 4. CRANE COMPANY DOUBLE-PIPE FITTINGS.

DIMENSIONS FOR AMMONIA CONDENSER				DIMENSIONS FOR AMMONIA BRINE COOLER			
A	B	C	D	A	B	C	D
9 5/16	5 3/16	11 1/4	3	10 7/16	6 11/16	11 13/16	3

Rating of Double-Pipe NH_3 Condensers. The following tables show the effect of increasing the condensing water passing through a double-pipe condenser. These tables enable the engineer to determine the size of the condenser which will be needed to do certain work. If *capacity* is the requirement, Table 4 shows what can be done and what the cost in power will be. If a "reduction in horsepower" is the requirement, Table 5 shows how to obtain it and at what expense.

These tables also show how to economize in water and what the corresponding loss in capacity will be:

TABLE 4

DOUBLE-PIPE CONDENSER DATA

High-Pressure Constant

CONDENSING WATER				Capacity in Tons Refrig. per 24 Hours	Condensing Pressure Lbs. per Square Inch	HORSEPOWER PER TON REFRIGERATION		
Velocity Through 1¼-Inch Pipe Feet per Minute	Total Gallons Used per Min.	Gallons per Min. per Ton Refrig.	Friction Through Coil Lbs. per Sq. In.			Engine Driving Compressor	Circulating Water Through Condenser	Total Engine and Water Circulation
100.....	7.77	1.16	1.69	6.7	185	1.71	.0012	1.7112
150.....	11.65	1.165	3.05	10.	185	1.71	.002	1.712
200.....	15.54	1.165	5.08	13.4	185	1.71	.004	1.714
250.....	19.42	1.18	7.89	16.4	185	1.71	.006	1.716
300.....	23.31	1.24	11.41	18.8	185	1.71	.009	1.719
400.....	31.08	1.30	20.51	24.	185	1.71	.016	1.726

TABLE 5

DOUBLE-PIPE CONDENSER DATA

Capacity Constant

100.....	7.77	0.777	1.69	10.	225	2.04	.0008	2.0408
150.....	11.65	1.165	3.05	10.	185	1.71	.002	1.512
200.....	15.54	1.554	5.08	10.	165	1.54	.005	1.545
250.....	19.42	1.942	7.89	10.	155	1.46	.009	1.469
300.....	23.31	2.331	11.41	10.	148	1.40	.016	1.416
400.....	31.08	3.108	20.51	10.	140	1.33	.038	1.368

Capacities and horsepower per ton refrigeration of one section counter-current double-pipe condenser, 1¼-inch and 2-inch pipe, 12 pipes high, 19 feet outside water bends, for water velocities 100 to 400 feet per minute. Initial temperature of condensing water 70 degrees.

NOTE:—Above tables are based on the heat transmission obtained for various velocities of water, as averaged up from *York Manufacturing Company's* tests on double-pipe condensers.

The horsepower per ton is for single-acting compressor and 15.67 pounds suction pressure.

The friction in water pump and connections should be added to water horsepower and to total horsepower.

Shipley Flooded Condenser. Using *Mr. Shipley's* own words, "The effectiveness of the Shipley Flooded Condenser is based upon the fact that a gas is readily condensed when it is in a *fully* saturated condition." It is well known that this condition can be obtained by bringing the gas into contact with its liquid, thereby absorbing any superheat that may exist.

In this state, the vapor appears to "collapse" very rapidly upon a surface, and a much greater transfer of heat is obtained than when the gas is superheated, even very slightly.

The work of condensation in the flooded ammonia condenser is done in a similar manner to that in the injector or barometric steam condenser with the exception that in the steam condenser the work required to absorb the superheat, and thereby bring the entire body of gas to a *fully* saturated condition, as well as the work required to do the condensing, is done by injecting sufficient liquid (water) into the mixing chamber of the apparatus, into direct contact with the gas, to do the entire work. In the Flooded Ammonia Condenser only sufficient liquid is brought into contact with the gas to absorb the superheat and to insure a *fully* saturated condition and the work of condensation is done by the cooling water applied externally.

The advantage in using the flooded type of condenser is threefold: (1) cost; (2) saving of space; and (3) reduction of upkeep. This condenser is built in three types—atmospheric, double pipe, and shell and tube type.

One section of Shipley Flooded Atmospheric Condenser, 12 pipes high, 20′ 0″ long, made of 2″ pipe, or a total of 150 sq. ft. of pipe surface, when operating with 185-lb. condensing pressure and various temperatures of water, is rated as follows:

Temp. Water.....	55	60	65	70	75	80	85	90
Tonnage per Coil.....	54.6	49.9	44.4	39.3	33.5	26.5	17.1	11.8
Gallons Water per Min. per Ton Refrigeration.....	1.1	1.19	1.36	1.53	1.79	2.26	3.86	5.68

The following table gives the tonnage of one flooded double-pipe coil 8 pipes high, 18′ 2″ long, made of 2″ and 3″ pipe:

Temp. Water.....	55	60	65	70	75	80	85	90
Tonnage per Coil.....	62.5	55.9	49.3	42.5	35.8	28.8	21.3	13.0
Gallons Water per Min. per Ton Refrigeration.....	1.44	1.61	1.83	2.12	2.51	3.13	4.22	6.9

CHAPTER XXIX

BRINE CIRCULATING SYSTEM

In the brine circulating system (Fig. 1) the evaporating coils are placed in a tank containing the brine solution. A pump connected to the brine tank circulates the cold brine through the coils located in the storage rooms; the brine acting as a heat transfer medium. The principal advantages of the brine system is the ability to operate the refrigerating machine for only a part of the time, storing the refrigeration necessary to carry the plant during the period of shut-down and reducing to a minimum the length of ammonia piping and number of joints to be

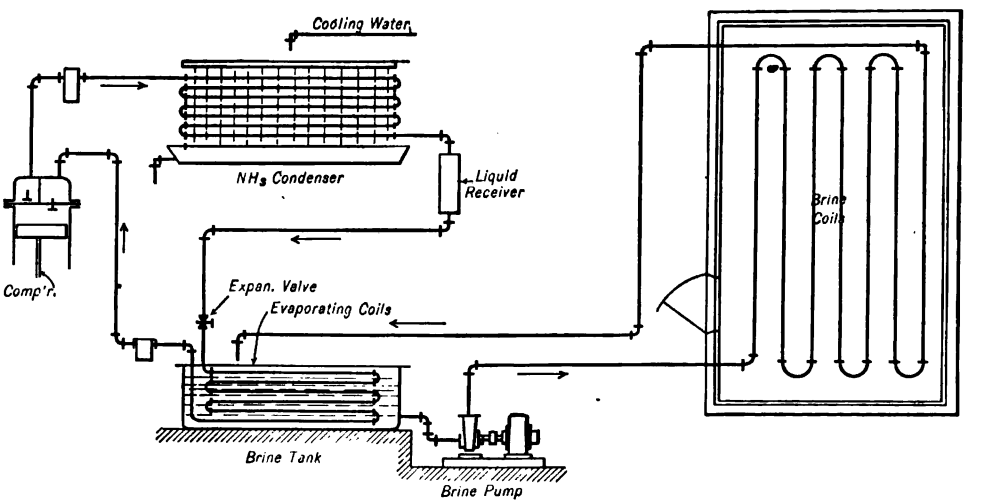

FIG. 1. BRINE CIRCULATING SYSTEM.

kept tight. The brine system is more expensive to operate, as a lower back pressure must be carried by the machine at all times. This is due to the fact that at least a 10-degree difference must be maintained between the temperature of the outgoing brine from the tank and that of the evaporating coils to obtain the necessary heat transfer from the brine to the ammonia. If direct expansion piping were employed the temperature in the evaporating coils could be the same as the average temperature of the brine circulated, or approximately 10° higher than for the brine system.

The increased size of machine necessary to pump the greater volume of gas and increase of power required is readily apparent from an inspection of the data given by Table 9 and diagram Fig. 7, in the Chapter on "Compression Machines."

Size of Brine Tank. The size of brine tank for continuous operation of the machine may be determined by allowing approximately 60 cu. ft. per ton of refrigeration.

For non-continuous operation the following formula may be used to determine the size of tank required.

Let R = refrigeration tons in 24 hours.

$\frac{R}{24}$ = tons per hour.

C = rating of machine required, tons in 24 hours.

h = hours out of 24 machine is operating

$24 - h$ = hours machine is idle.

S_b = specific heat of brine solution (approximately, 0.8, Table 1)

t_1 = initial temperature of brine when the machine is starting.

t_2 = final temperature when machine is shut down.

W = weight of brine required.

The refrigeration (tons) required in $(24 - h)$ hours is $(24 - h)\frac{R}{24}$ and will be that supplied by the brine tank or

$$\frac{W S_b (t_1 - t_2)}{288{,}000}$$

$$\therefore W = \frac{12{,}000\ R\ (24 - h)}{S_b\ (t_1 - t_2)}$$

$t_1 - t_2$ being the increase in temperature of the brine during the shut down period. The specific gravity of the brine solution to be used will depend on the lowest temperature t_2 to be carried, which fixes the percentage of salt in making up the solution.

Let x = specific gravity of solution at 60° F.

d = weight per cu. ft.

$= x \times 62.5$ (approximately).

Content of brine tank $= \frac{W}{d}$ cu. ft.

The size of brine circulating pump is calculated in the same manner as a water pump, making due allowance for slip, if a reciprocating pump is used.

The friction pressure-loss tables or diagram for water may be used in estimating the total head on the pump for the determination of the power required. (See the Chapter on "Pumps.")

The machine and condensing apparatus must be capable of producing R tons refrigeration in h hours, and also take care of the heat absorbed by the brine tank. It is usual to locate the brine tank in one of the rooms to be refrigerated, in which event the heat transmission of the tank is producing useful refrigeration and is not an extra tax upon the machine. The rating of the machine (tons, 24 hours) required will be

$$C = \frac{R}{h} \times 24.$$

The rating is based on a suction temperature in the evaporator coils approximately 10° lower than the lowest brine temperature required. At the present time, very few plants are installed where ammonia coils are submerged in a brine tank for the purpose of cooling the brine for a brine circulating system—this method is expensive and practically obsolete except in small plants. In modern plants, either a shell and tube, shell and coil, or a double pipe brine cooler is used; preferably a shell and tube type, as a larger body of liquid ammonia comes in contact with the cooling surface. On account of the much higher velocity of the brine in either of the above-mentioned coolers a much higher heat transmission is procured than could possibly be obtained

in a brine tank with ammonia coils placed in the same, and the space required by a brine tank and coils would be very much greater than would be necessary when using a brine cooler system.

In larger installations, what is known as the three pipe balanced system is used, especially where the brine is to be pumped against a great head. The balancing brine tank is located at a point slightly higher than the top coil in the building, while the pump and brine cooler are located in the engine room, usually in the basement or first floor of the building, the brine cooler and brine cylinders of pumps being well insulated. The pump suction is taken from the bottom of the balancing tank, discharging the brine through the cooler. The cold brine leaving the cooler passes through the coils in the various rooms, from which it is returned to the balancing tank. The brine lift is, therefore, only from the brine level in the balancing tank to the top of same, thereby reducing the horsepower to pump the brine to a minimum.

Most of the new packing houses and larger cold storage plants are now using the brine system, in preference to direct expansion, due to the fact that the ammonia system is practically limited to the engine room and always under the eye of the operating engineer.

In the direct expansion system, very often very warm products are placed in the rooms suddenly (more especially so in packing houses, fish storage, etc.) causing very violent boiling of the ammonia in the coils to such an extent that the liquid is thrown from the coils back to the compressor before the operating man is aware of it, which in a number of cases has caused the rupture of the cylinder heads, and in several cases loss of life.

Such action does not take place in a brine system, especially if a shell and tube or shell and coil brine cooler is used, as there is so much disengaging surface around these tubes or coils that the liquid, even if a sudden change does take place, is practically kept in the cooler, and vaporized there, and does not affect the machine except to raise the pressure somewhat.

Mr. *C. D. Fehl* gives the following method of ascertaining the amount of surface required in the coils to take care of a given amount of work.

Example. Assume a small butchering establishment, in which they kill and store 5,000 lb. of beef per day of 24 hours, and store same in a room 31′ 0″ long, 12′ 0″ wide and 15′ high, all sides being exposed to an outside temperature of 90° F. The beef enters the storage room at the same temperature, and is cooled down to the temperature of the room which is to be held at 33° F.

Use 4″ cork board on all parts of the room, allowing a heat leakage of 1.5 B.t.u. and assume the specific heat of the beef to be 0.77.

The total exposed surface is 1,980 square feet, therefore:

$$\frac{1980 \times 1.5 \times (90 - 33)}{24} = 7{,}054 \text{ B.t.u. per hour}$$

$$\frac{5000 \times 0.77 \times (90 - 33)}{24} = 9{,}144 \text{ B.t.u. per hour}$$

Two workmen at 500 each = 1,000 B.t.u. per hour

3–16 C. P. Incandescent lgts. at 254 units each = 762 B.t.u. per hour

17,960 B.t.u. per hour

Add 20% for opening doors, etc. = 3,592 B.t.u. per hour

21,552 B.t.u. per hour

$$\frac{21{,}552}{12{,}000} = 1.8 \text{ tons refrigeration.}$$

The surface required in the room is based on the assumption that the brine enters the room coils at 15° F. and leaves the same at 20° F. Using *Hausbrand's* method of arriving at the mean difference in temperature and assuming that the pipe will be frosted, giving us a heat transmission of 2 B.t.u. per hour, per 1° F. mear difference in temperature, we have $20 - 15 = 5$, which is the least difference in temperature, and $90 - 33 = 57$, which is the greatest difference in temperature. So that $5/57 = 0.88$.

Referring to Table 1, Chapter XXIII on the "Heat Transmission of Piping" we find by interpolation opposite 0.88 the coefficient 0.94.

$0.94 \times 57 = 53.58$ mean difference in temperature.

$$\frac{22{,}447}{2 \times 53.58} = 209.4 \text{ square feet of surface required.}$$

Assuming that we use 1 ¼" pipe, we would require $209.4 \times 2.301 = 482$ linear feet.

This same method of procedure is used in figuring all kinds of coil surfaces where the velocity of liquids or gases as well as the heat transmission at the different velocities are known.

For safety we would add 20% to the surface for the room as figured above, as sometimes, in practice, the brine may rise to a higher temperature than calculated.

Brine Solutions. As the temperatures employed are usually below the freezing point of water, it becomes necessary to employ a brine solution.

Common salt (NaCl) brine corrodes pipe so freely that leakage, repairs, and delay soon offset the lower first cost of salt. Refrigerated brines must be circulated at temperatures so close to 0° F., which is the freezing point of common salt brine, that crystals of salt separate out, clog the pipes, increase the friction, and tend to insulate the pipes, thus requiring that more brine be circulated than would be necessary with clean pipes.

Calcium chloride ($CaCl_2$) brine has the advantage of having absolutely no action on the pipes and that temperatures considerably below 0° F. may be employed. While the cost of calcium chloride is somewhat greater than common salt, this is offset to some extent by the fact that approximately 25 per cent less weight is required.

TABLE 1

COMMON SALT BRINE

60° Fahrenheit

Degrees Baumé	Degrees Salometer	Specific Gravity	Per Cent Salt	Weight of One Gallon	Wgt. of One Cubic Foot	Freezing Point	Specific Heat
5	20	1.037	5	8.7	64.7	25.4° F.	0.96
10	40	1.073	10	9.0	67.0	18.6	.892
15	60	1.115	15	9.3	69.6	12.2	.855
19	80	1.150	20	9.6	71.8	6.9	.829
23	100	1.191	25	9.9	74.3	1.0	.783

The following table gives the strength and freezing points of Solvay 75% calcium chloride solutions:

TABLE 2

CALCIUM CHLORIDE BRINE

Specific Gravity at 68° F.	Lb. 75% Solvay Cal. Chl. per Gal.	Lb. 75% Solvay Cal. Chl. per Cu. Ft.	Freezing Point Deg. Fahr.	Specific Heat
1.100	1.46	10.9	18.0	0.88
1.125	1.83	13.7	12.5	.87
1.150	2.20	16.5	+ 6.5	.85
1.175	2.59	19.4	− 2.0	.835
1.200	2.99	22.4	− 12.5	.81
1.225	3.38	25.3	− 23.5	.80
1.250	3.75	28.3	−36.5	.77

Brine Piping. In designing brine lines one manufacturer recommends the following procedure: *First*, calculate the heat to be absorbed by each coil, basing calculations upon the refrigeration required for the various boxes and any other refrigerating requirements; *second*, calculate the amount of brine to be circulated to absorb the calculated amount of heat with a *temperature rise of two to five degrees*. The quantity of brine to be circulated per degree F. rise of temperature with specific heat of brine equal to 0.829 is, per ton of refrigeration or 12,000 B.t.u. per hour, 242.4 lb. or 25.2 gal. per minute; *third*, after the pipe sizes and length of lines have been determined the friction of the system should be estimated (see Friction Pressure-loss Chart, Chapter II, also Table 3 following). When the number and character of the fittings is not definitely known it will usually be sufficiently accurate to assume that the friction loss in the fittings will amount to from 20 to 40 per cent of the pipe friction, using the latter figure for small jobs and the former for, say, large drinking-water systems.

Difficulty is sometimes encountered in adjusting the flow of brine in a series of parallel coils. If two precautions are taken in laying out the system, regulating the flow becomes comparatively simple. *First*, arrange the system so that it will always be full of brine while in operation and so that no air can collect. *Second*, keep the system under pressure. To insure this it is often desirable to place a reducing valve on the discharge.

TABLE 3

FRICTION LOSS IN PIPES AND FITTINGS IN POUNDS PER SQUARE INCH

	Gal. Per Min.	Vel. Ft. Per Min.	Per 10-Ft. Pipe	Tees	Return Bends	Ells
¾" Pipe	.50	50	.065	.009	.006	.004
	.60	60	.086	.012	.009	.006
	.70	70	.122	.016	.012	.008
	.80	80	.151	.021	.016	.010
	.90	90	.195	.026	.019	.013
	1.00	100	.238	.032	.024	.015
	1.50	150	.475	.069	.052	.035
	2.00	200	.870	.117	.087	.061
1" Pipe	.60	38	.030	.006	.005	....
	.70	44	.041	.007	.006	....
	.80	51	.052	.008	.007	.004
	1.00	63	.078	.013	.010	.007
	1.50	95	.170	.028	.022	.014
	2.00	126	.280	.052	.037	.024
	2.50	158	.433	.074	.056	.037
	3.00	190	.615	.108	.078	.056
1¼" Pipe	1.00	36	.019	.005	....	....
	1.25	45	.028	.007	.001	....
	1.50	54	.041	.010	.007	.005
	2.00	72	.074	.017	.013	.009
	2.50	90	.108	.026	.019	.013
	3.00	108	.156	.037	.028	.018
	4.00	144	.264	.061	.048	.030
	6.00	216	.565	.143	.104	.074
1½" Pipe	1.5	33	.013	....	....	....
	2.0	45	.022	.007	.005	....
	3.0	67	.048	.015	.012	.008
	4.0	90	.083	.026	.019	.013
	5.0	112	.122	.039	.029	.019
	6.0	134	.173	.056	.041	.028
	8.0	179	.303	.095	.073	.052
	10.0	224	.455	.147	.108	.074

	Gal. Per Min.	Vel. Ft. Per Min.	Per 10-Ft. Pipe	Tees	Return Bends	Ells
1¼" Pipe	3	39	.017	.006	....	....
	4	52	.020	.009	.007	.005
	6	77	.043	.019	.015	.009
	8	103	.074	.033	.025	.017
	10	129	.113	.052	.039	.026
	12	155	.160	.074	.056	.037
	15	193	.242	.113	.087	.056
	20	258	.415	.195	.147	.095
1½" Pipe	6	57	.019	.011	.008	.006
	8	75	.034	.019	.014	.009
	10	95	.052	.028	.021	.014
	15	142	.113	.061	.048	.030
	20	190	.191	.104	.078	.056
	25	236	.282	.156	.117	.078
	30	284	.412	.230	.169	.113
	35	330	.540	.304	.221	.147
2" Pipe	10	57	.015	.011	.008	.006
	15	86	.031	.024	.018	.017
	20	115	.056	.041	.030	.020
	25	143	.082	.061	.048	.030
	30	172	.117	.087	.065	.043
	40	230	.200	.152	.113	.074
	50	286	.304	.226	.169	.113
	60	344	.433	.325	.243	.160
2½" Pipe	20	80	.022	.021	.016	.010
	30	120	.048	.043	.035	.022
	40	160	.082	.074	.056	.039
	50	200	.121	.117	.086	.056
	60	240	.178	.165	.121	.078
	80	320	.303	.282	.208	.139
	100	400	.465	.455	.347	.221
	125	500	.695	.650	.475	.323

Pipe friction given is per 10 lineal feet of pipe.
Friction in tees given is for the branch only.
Friction of gate valves and straight run of tees is negligible.
Do not use globe valves.
Friction given is for standard fittings.

Bolts

FIG. 2. BELT-DRIVEN BRINE PUMP.

TABLE 4

DUPLEX PISTON BRINE PUMPS

Size		Rev. per Min.	Gal. per Min.	Dia. of Pipes		Std. Pulley		A	B	C	D	E	F	G	H	J
Cylinder, Inches	Stk. Ins.			Suc.	Dis.	Dia.	Face									
1½	2	120	3	¾	½	25	2¼			6¼	7¼	16½			1½	¾
1½	2	120	5	1	¾	27	2¼	14	7⅛	4½	6⅛	17½	6	5½	1½	⅝
1¾	2	120	6	1	¾	27	2¼	14	7⅛	4½	6⅛	17½	6	5½	1½	⅝
1¾	2½	120	10	1¼	1	30	2¾	16	8¼	4½	7⅛	21	7	6 7/16	1⅝	⅝
1¾	2½	120	12	1¼	1	30	2¾	16	8¼	4½	7⅛	21	7	6 7/16	1⅝	⅝
2¼	2½	120	18	1½	1¼	38	3¼	16	10½	6¼	9	25½	8½	8	2	½
2¼	3	120	25	2	1½	42	3½	20	16	14¼	11¼	32	9½	7	2¼	½
2¾	3⅓	120	30	2	1½	42	3½	20	16	14¼	11¼	32	9½	7	2¼	½
2¾	4	100	40	2½	2	58	4½	24	17¾	16	14	38	11 7/16	9½	2½	⅝
3	4	100	50	2½	2	58	4½	24	17¾	16	14	38	11 7/16	9½	2½	⅝
3½	4¾	100	60	3	2½	58	4½	24	17¾	16	14	38	11 7/16	9½	2½	⅝

NOTES.—These pumps are brass fitted.
Where specially quiet operation is necessary, run at lower speeds.
Capacity is proportional to speed.
Size 1½ x 2" pump is single cylinder only.

COMPARISON BETWEEN DIRECT EXPANSION AND BRINE CIRCULATING SYSTEMS

Direct Expansion. Assuming that a temperature of 20° F. is desired in a refrigerating room piped with direct expansion coils, the temperature of the ammonia must be approximately 10° F. lower or 10°, which corresponds to a suction pressure of 23.3 lb. gage. If the condensing pressure is 182.6 lb. gage and corresponding temperature of 95°, then $\frac{200}{541.2 - 71.3}$ or 0.425 lb. of ammonia must be pumped per minute per ton of refrigeration. The specific volume of the gas being 7.34 cu. ft., then $0.425 \times 7.34 = 3.12$ cu. ft. of saturated vapor to be handled by the compressor per ton per minute, which requires 1.22 compressor i.hp. per ton, 24 hours.

Brine Circulating System. Continuous Operation. The temperature of the brine in the room coils must be essentially the same as was the ammonia in the direct expansion system, or 10° F.

The temperature of the ammonia in the evaporating coils of the brine tank will be approximately 10° lower or 0° F. In this case it is found that 0.427 lb. of ammonia must be circulated per min. per ton of refrigeration, per 24 hours.

The specific volume for 0° F. is 9.19 cu. ft. per lb. The compressor must handle $0.427 \times 9.19 = 3.92$ cu. ft. per minute per ton of refrigeration 24 hours, the i.hp. of compressor per ton being 1.46. This shows with the conditions assumed the brine circulating system continuously operated requires $\frac{3.92 - 3.12}{3.12}$ or 25.6 per cent larger compressor capacity and an increased power consumption of $\frac{1.45 - 1.22}{1.22}$ or 20 per cent and in addition the power required to operate the brine circulating pump.

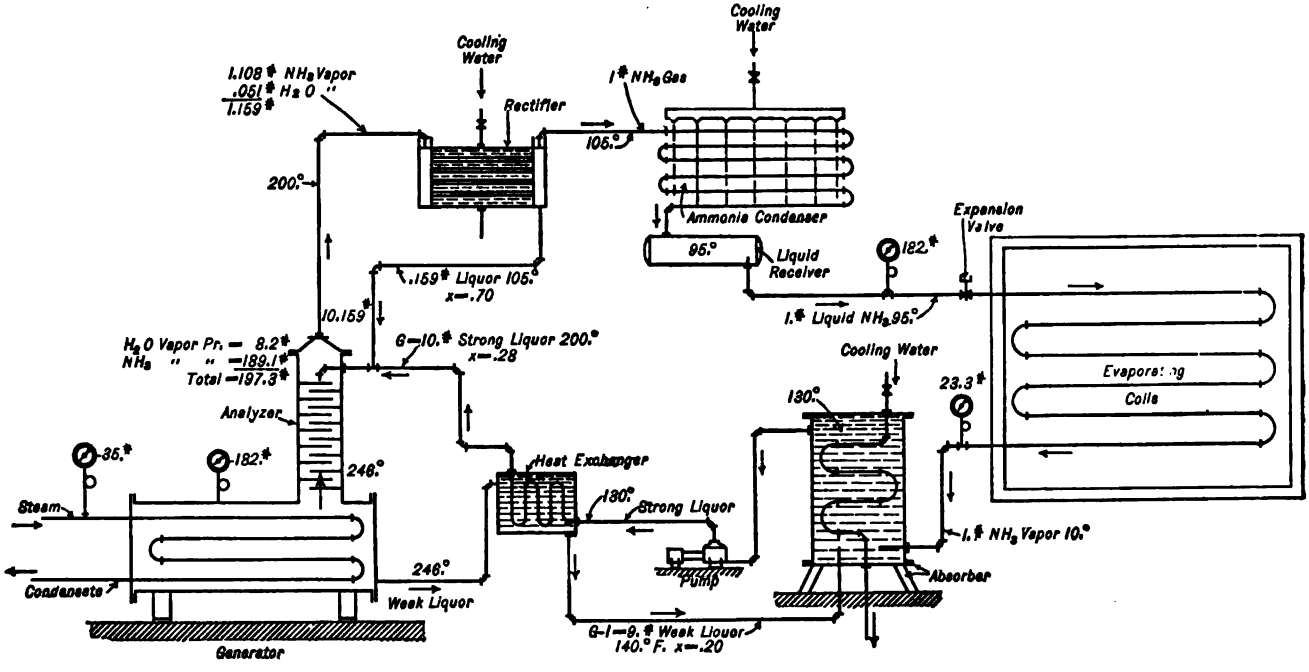

FIG. 1. DIAGRAM OF ABSORPTION PLANT.

CHAPTER XXX

THE AMMONIA ABSORPTION MACHINE

General. If a solution of NH_3 and water (ammonia liquor) be placed in a boiler, termed a "generator," and sufficient heat supplied by a steam coil be applied, both superheated NH_3 gas and steam will be driven off or generated. The total pressure existing in the generator is made up of the partial vapor pressures of NH_3 and H_2O.

The vapors on leaving the generator are first passed through a cooler (termed a rectifier or dehydrator) which is connected with the cooling water supply. A temperature is maintained in the rectifier which is sufficiently low to condense out practically all of the water vapor, approximately 90 per cent, but not the ammonia. The condensed water reabsorbs some of the NH_3 gas and is dripped back into the generator as rich liquor. This leaves practically dry NH_3 gas to be passed to an NH_3 condenser to be liquefied.

The liquid NH_3 is then expanded in evaporating coils and refrigeration produced as in the compression system. The expanded NH_3 gas leaving the evaporating coils passes to the "absorber" where it is reabsorbed by the weak liquor drawn from the bottom of the generator. The rich liquor produced by the absorption is then pumped back to the analyzer and generator to repeat the cycle.

The analyzer, located on top of the generator, consists of a series of trays over which the rich liquor flows on its way to the generator. The function of the analyzer is to reduce the superheat in the discharge gases, thus relieving the rectifier, or dehydrator, and condenser of a part of the heat to be removed in the condensation of the superheated vapors. The analyzer is frequently omitted in order to lower the first cost of apparatus at the expense of economy in operation.

Arrangement of apparatus used in the absorption system of refrigeration is shown by Figs. 1 and 2.

The pressure existing in the generator and rectifier is determined by the temperature maintained in the condenser, which in turn is dependent upon the amount and temperature of the condensing water supply available.

In order to make the calculations necessary for the design of an absorption machine, a working knowledge of the following items is essential:

(1) Dalton's law of partial vapor pressures modified.

(2) Properties of saturated and superheated steam.

(3) Properties of saturated and superheated ammonia vapor.

(4) Boiling point of NH_3 and H_2O solutions of various strengths corresponding to various pressures.

(5) Weight of NH_3 absorbed by water.

(6) The heat developed by the chemical reaction taking place when NH_3 is absorbed by water.

Boiling Point of NH_3 Solutions. The following abridged table, giving the boiling point in degrees F. for solutions of ammonia and water for various pressures, was taken from a table calculated by *H. J. MacIntire*, based on the experiments of *Hilde Mollier*.

The experimental formula used was

$$T_s = \frac{T_a}{0.00466x + 0.656},$$

in which T_a = the absolute temperature of saturated NH_3, corresponding to the observed pressure.

T_s = absolute temperature of the solution.

x = per cent of NH_3 by weight in the solution.

Between concentrations of about 15 per cent and 35 per cent this formula gives results that check with the experimental work of both *Starr* and *Mollier*.

TABLE 1

PROPERTIES OF SOLUTIONS OF AMMONIA AND WATER

Hilde Mollier. Zeitschrift für die Gesamte Kälte Industrie. (1908.)

Translated and Extended by *H. J. MacIntire.*

Figures are the Temperatures Corresponding to the Concentration of NH_3 Solution

Per Cent NH_3	Absolute Pressure								
	10	12	14	16	18	20	22	24	26
2	169.0	178.5	185.6	193.2	201.5	206.5	212.8	217.5	222.4
4	161.0	169.5	177.0	184.7	191.5	197.5	203.0	207.9	212.8
6	153.0	161.0	168.5	176.0	182.4	188.8	194.0	199.0	203.7
8	143.5	152.7	160.5	167.9	174.0	180.1	185.3	190.3	195.0
10	137.4	144.5	151.8	158.8	165.0	171.1	176.5	181.4	186.0
12	129.0	136.7	144.3	151.3	157.6	163.1	168.0	172.9	177.2
14	120.5	129.0	136.7	143.6	150.0	155.5	160.6	165.1	169.7
16	113.0	121.4	129.5	136.0	142.0	147.4	152.1	156.9	161.3
18	107.5	113.5	121.5	128.1	134.4	139.7	144.7	149.2	153.5
20	99.0	106.8	114.0	120.6	126.7	132.0	137.0	141.6	145.7
22	92.0	99.2	106.5	113.3	119.1	124.6	129.5	133.9	138.0
24	86.0	93.5	100.0	106.0	111.8	117.0	122.4	127.0	131.5
26	79.2	86.0	93.0	99.5	105.3	110.6	115.6	120.1	124.1
28	73.4	81.0	87.8	93.5	98.8	103.6	108.7	113.3	117.3
30	66.5	74.5	80.9	86.7	92.1	97.0	101.8	106.3	110.5
32	61.0	68.0	74.0	79.8	85.0	90.0	94.5	99.0	103.0
34	55.0	62.4	68.8	74.3	79.4	84.0	88.5	92.8	96.8
36	49.0	56.5	63.0	69.0	73.8	78.5	82.6	86.8	90.8
38	43.0	50.5	57.0	63.0	68.0	72.5	76.6	80.7	84.6
40	37.0	44.5	51.0	56.2	61.0	66.0	70.4	74.8	79.0
42	31.6	39.4	46.0	51.4	56.3	61.0	65.2	69.1	73.9
44	27.5	34.0	40.5	45.9	50.8	55.3	59.8	63.5	67.1
46	21.2	28.5	34.9	40.4	45.4	49.7	53.8	57.8	61.5
48	16.0	23.0	29.0	34.9	40.0	44.4	48.5	52.4	56.0
50	11.0	18.0	24.0	29.7	34.4	38.9	42.8	46.6	50.3

Per Cent NH_3	Absolute Pressure							
	28	30	32	34	36	38	40	42
2	226.9	231.1	235.1	238.9	242.4	246.0	249.4	252.5
4	217.7	221.9	226.0	229.8	233.4	237.0	240.3	243.4
6	208.1	212.4	216.4	220.1	223.5	226.5	229.5	232.0
8	199.5	203.7	207.5	211.3	214.9	218.1	221.4	224.5
10	190.5	194.6	198.7	202.3	205.9	209.0	212.3	215.2
12	181.5	185.5	189.4	193.0	196.7	200.0	203.3	206.3
14	173.6	177.6	181.4	185.0	188.5	192.0	195.2	198.2
16	165.4	169.4	173.2	177.0	180.6	183.7	187.1	190.0
18	157.4	161.2	165.0	168.4	171.8	175.1	178.3	181.1
20	149.8	153.8	157.6	161.0	164.3	167.3	170.2	172.8
22	142.0	146.0	149.7	153.2	156.5	159.6	162.7	165.5
24	135.4	139.2	142.8	146.0	149.2	152.2	155.2	158.0
26	128.1	131.9	135.5	138.9	142.0	145.2	148.2	151.0
28	121.3	125.0	128.3	131.5	134.6	137.5	140.6	143.4
30	114.4	117.8	121.2	124.5	127.4	130.5	133.5	136.0
32	107.0	111.0	114.9	118.0	121.3	124.3	127.1	129.8
34	100.8	104.5	108.0	111.3	114.5	117.3	120.0	122.5
36	94.4	98.1	101.7	104.9	108.0	111.0	113.5	116.2
38	88.2	91.8	95.1	98.2	101.0	104.0	106.8	109.2
40	82.2	86.0	89.2	92.4	95.3	98.0	101.0	103.5
42	76.1	79.4	82.5	85.5	88.2	91.2	94.0	96.5
44	70.4	73.6	76.7	79.6	82.4	85.0	87.8	90.4
46	65.0	68.1	71.2	74.0	76.7	79.6	82.0	84.5
48	59.8	62.7	65.8	68.7	71.5	74.2	76.7	79.0
50	53.5	56.8	59.9	62.5	65.5	68.3	70.9	37.4

TABLE 1—*Continued*

Per Cent NH_3	Absolute Pressure								
	44	46	48	50	52	54	56	58	60
2	255.6	258.6	261.5	264.3	267.1	269.8	272.4	274.9	277.9
4	246.4	249.5	252.2	255.0	257.9	260.4	262.9	265.3	267.7
6	235.0	238.0	241.0	244.0	248.0	250.6	253.0	255.5	258.0
8	227.4	230.3	233.1	236.0	238.6	241.0	243.5	245.8	248.2
10	218.3	221.2	224.3	227.0	229.7	232.3	234.8	237.3	239.6
12	209.3	211.9	214.6	217.2	219.8	222.4	224.6	226.8	229.2
14	201.1	204.0	206.5	209.1	211.7	214.0	216.3	218.5	220.8
16	192.9	195.5	198.0	200.5	203.0	205.3	207.7	209.8	212.0
18	184.0	186.8	189.4	192.0	194.4	196.7	198.9	201.0	203.1
20	175.5	178.5	181.0	183.6	186.0	188.4	190.8	193.2	195.4
22	168.3	170.9	173.4	175.9	178.2	180.6	182.8	184.9	187.0
24	160.8	163.5	166.1	168.7	171.2	173.6	175.8	178.0	180.0
26	153.5	156.2	158.6	161.0	163.5	165.6	167.8	170.0	172.1
28	146.0	148.9	151.5	154.0	156.5	158.8	161.0	163.0	165.2
30	138.8	141.3	143.8	146.1	148.4	150.8	152.9	154.9	157.0
32	132.1	134.7	137.0	139.4	141.4	143.5	145.6	147.6	149.7
34	125.0	127.5	129.9	132.0	134.1	136.3	138.3	140.5	142.4
36	118.7	121.1	123.5	125.8	127.9	130.0	132.0	134.0	136.0
38	111.9	114.5	117.0	119.4	121.7	123.9	126.0	128.0	130.0
40	105.9	108.1	110.6	112.9	115.2	117.3	119.4	121.5	123.4
42	99.2	101.7	104.0	106.3	108.5	110.6	112.5	114.5	116.4
44	93.0	95.5	97.9	100.1	102.3	104.4	106.5	108.3	110.3
46	86.9	89.4	91.7	94.0	96.1	98.3	100.3	102.3	104.2
48	81.5	83.8	86.0	88.3	90.4	92.5	94.5	96.5	98.5
50	75.9	78.1	80.4	82.6	84.8	86.9	88.8	90.8	92.6

Per Cent NH_3	Absolute Pressure							
	62	64	66	68	70	72	74	76
2	279.7	282.0	284.3	286.5	288.8	291.0	293.0	295.0
4	270.2	272.3	274.6	276.9	278.9	281.0	283.0	285.0
6	260.3	262.5	264.8	267.0	269.0	271.0	273.0	274.9
8	250.6	252.7	255.0	257.1	259.0	261.0	263.0	264.9
10	242.0	244.1	246.3	248.4	250.5	252.3	254.1	255.9
12	231.5	233.5	235.7	237.9	240.0	241.8	243.7	245.5
14	222.9	225.0	227.0	229.0	231.2	233.0	234.9	236.8
16	214.0	216.1	218.2	220.3	222.3	224.1	226.0	227.9
18	205.2	207.3	209.5	211.5	213.5	215.3	217.2	219.0
20	197.4	199.4	201.3	203.1	205.0	206.7	208.3	210.2
22	189.0	191.1	193.1	195.0	196.9	198.7	200.5	202.3
24	182.2	184.1	186.0	188.0	190.0	191.6	193.4	195.1
26	174.2	176.2	178.2	180.1	182.0	184.0	185.7	187.3
28	167.3	169.1	171.0	172.9	174.7	176.3	178.0	179.7
30	159.0	160.9	162.8	164.6	166.4	168.1	169.9	171.7
32	151.5	153.4	155.2	157.0	158.8	160.5	162.3	164.0
34	144.4	146.2	148.1	150.0	151.9	153.6	155.3	157.0
36	137.9	139.8	141.7	143.5	145.3	146.9	148.6	150.2
38	131.9	133.7	135.5	137.3	138.7	140.5	142.0	143.6
40	125.2	127.0	128.9	130.5	132.3	133.9	135.4	137.0
42	118.3	120.0	121.7	123.3	124.9	126.4	128.0	129.5
44	112.0	113.8	115.5	117.1	118.8	120.3	121.9	123.3
46	106.0	107.7	109.4	111.0	112.6	114.1	115.6	117.2
48	100.2	101.9	103.6	105.3	106.7	108.2	109.8	111.2
50	94.4	96.1	97.8	99.3	100.8	102.5	104.0	105.4

Per Cent NH_3	Absolute Pressure								
	78	80	82	84	86	88	90	92	94
2	297.0	299.0	300.8	302.6	304.4	306.1	307.8	309.5	311.1
4	286.8	288.6	290.4	292.1	293.9	295.6	297.3	299.0	300.7
6	276.8	278.5	280.4	282.2	283.0	285.6	287.4	289.0	290.5
8	266.7	268.5	270.3	272.0	273.8	275.5	277.3	278.9	280.5
10	257.8	259.5	261.2	262.9	264.6	266.2	267.9	269.5	271.1
12	247.5	249.4	251.2	252.9	254.7	256.5	258.1	259.7	261.2
14	238.6	240.5	242.2	243.9	245.7	247.2	248.9	250.4	251.9
16	229.7	231.6	233.2	235.0	236.7	238.2	239.9	241.4	242.9
18	220.9	222.6	224.3	226.0	227.7	229.3	230.9	232.4	233.9
20	212.0	213.8	215.3	216.9	218.6	220.1	221.8	223.3	224.7
22	204.0	205.6	207.1	208.8	210.4	211.9	213.5	215.0	216.4
24	196.9	198.4	200.0	201.5	203.0	204.5	206.0	207.3	208.9
26	189.0	190.7	192.3	193.7	195.3	196.8	198.2	199.7	201.0
28	181.2	182.8	184.3	185.9	187.3	188.8	190.3	191.6	193.0
30	173.1	174.9	176.6	178.1	179.8	181.2	182.7	184.0	185.4
32	165.8	167.3	169.0	170.6	172.0	173.5	175.0	176.5	177.9
34	158.6	160.2	161.7	163.3	164.7	166.3	167.8	169.3	170.7
36	151.8	153.3	154.7	156.3	157.7	159.2	160.7	162.0	163.5
38	145.1	146.7	148.1	149.6	151.1	152.4	153.8	155.2	156.4
40	138.5	140.0	141.4	142.7	144.2	145.6	147.0	148.3	149.7
42	131.0	132.5	134.0	135.5	136.9	138.3	139.8	141.0	142.5
44	124.8	126.3	127.8	129.2	130.6	131.9	133.4	134.7	136.0
46	118.7	120.1	121.5	122.9	124.2	125.7	126.9	128.3	129.6
48	112.5	114.0	115.3	116.7	118.0	119.3	120.6	121.9	123.2
50	106.9	108.3	109.8	111.0	112.2	113.7	114 9	116.2	117.3

TABLE 1—*Continued*

Per Cent NH_3	Absolute Pressure							
	96	98	100	102	104	106	108	110
2	312.8	314.5	316.2	317.7	319.3	320.8	322.3	323.7
4	302.3	304.0	305.6	307.1	308.7	310.3	311.9	313.4
6	292.1	293.6	295.3	296.6	298.1	299.6	301.2	302.6
8	282.0	283.5	285.1	286.7	288.2	289.7	291.2	292.5
10	272.8	274.3	275.8	277.1	278.7	280.1	281.4	282.9
12	262.7	264.1	265.6	267.0	268.5	269.9	271.3	272.7
14	253.4	254.7	256.1	256.6	259.0	260.4	261.8	263.0
16	244.7	245.7	247.3	248.7	250.0	251.4	252.7	254.0
18	235.3	236.6	238.0	239.4	240.7	242.0	243.5	244.7
20	226.3	227.8	229.1	230.5	231.9	233.2	234.5	235.9
22	217.9	219.2	220.6	222.0	223.2	224.5	225.9	227.1
24	210.4	211.7	213.0	214.3	215.6	216.8	218.0	219.2
26	202.4	203.8	205.1	206.4	207.8	209.0	210.3	211.5
28	194.4	195.7	197.1	198.4	199.6	200.9	202.0	203.1
30	186.9	188.0	189.4	190.6	191.9	193.2	194.4	195.6
32	179.3	180.6	182.0	183.1	184.5	185.8	186.9	188.2
34	172.0	173.3	174.6	175.9	177.2	178.4	179.5	180.9
36	164.8	166.0	167.3	168.6	169.8	171.0	172.3	173.5
38	157.7	159.0	160.3	161.4	162.7	164.0	165.2	166.4
40	150.8	152.1	153.4	154.6	155.8	157.0	158.1	159.4
42	143.8	145.2	146.4	147.8	149.0	150.3	151.5	152.7
44	137.2	138.5	139.9	141.1	142.4	143.7	144.8	146.0
46	130.8	132.1	133.4	134.7	133.9	137.0	138.3	139.5
48	124.5	125.7	127.0	128.1	129.3	130.6	131.6	132.9
50	118.6	119.9	121.0	122.1	123.4	124.3	125.5	126.9

Per Cent NH_3	Absolute Pressure								
	112	114	116	118	120	122	124	126	128
2	325.2	326.5	328.0	329.4	330.7	332.0	333.4	334.7	336.0
4	314.9	316.3	317.7	319.0	320.3	321.7	323.0	324.2	325.5
6	304.1	305.5	306.9	308.2	309.6	310.9	312.2	313.5	314.7
8	294.2	295.5	296.9	298.2	299.6	300.9	302.1	303.4	304.6
10	284.3	285.5	286.9	298.2	289.4	290.8	291.9	293.2	294.4
12	274.1	275.4	276.8	278.0	279.3	280.6	281.8	283.1	284.3
14	264.5	265.9	267.1	268.4	269.7	271.0	272.3	273.5	274.7
16	255.3	256.6	257.9	259.1	260.4	261.6	262.9	264.0	265.3
18	246.0	247.3	248.5	249.8	251.0	252.2	253.4	254.6	255.8
20	237.1	238.3	239.6	240.9	242.0	243.3	244.4	245.6	256.8
22	228.4	229.7	230.9	232.2	233.4	234.5	235.9	237.0	238.1
24	220.7	221.7	223.0	224.2	225.5	226.6	227.8	228.9	230.0
26	212.6	214.0	215.2	216.3	217.6	218.7	219.9	221.0	222.3
28	204.5	205.6	206.9	208.1	209.3	210.5	211.6	212.8	213.9
30	196.9	198.0	199.2	200.3	201.3	202.5	203.6	204.7	205.8
32	189.4	190.6	191.8	192.9	194.0	195.1	196.1	197.2	198.3
34	182.0	183.2	184.3	185.5	186.6	187.6	188.7	189.8	190.9
36	174.6	175.8	177.0	178.2	179.3	180.3	181.4	182.5	183.5
38	167.7	168.8	170.0	171.0	172.2	173.2	174.2	175.3	176.3
40	160.6	161.8	162.9	164.0	165.0	166.1	167.2	168.3	169.4
42	153.9	155.0	156.1	157.3	158.3	159.5	160.4	161.5	162.5
44	147.1	148.2	149.4	150.5	151.5	152.6	153.6	154.7	155.7
46	140.6	141.7	142.8	143.9	145.0	146.0	147.0	148.0	149.0
48	134.0	135.0	136.2	137.2	138.4	139.4	141.5	141.6	142.6
50	128.1	129.1	130.2	131.3	132.4	133.3	134.2	135.2	136.2

Per Cent NH_3	Absolute Pressure								
	130	132	134	136	138	140	142	144	146
2	337.4	338.7	339.9	341.2	342.4	343.6	344.8	346.0	.....
4	326.7	328.0	329.2	330.5	331.6	333.0	334.0	335.2	.....
6	316.0	317.2	318.4	319.8	321.0	322.2	323.4	324.5	.....
8	305.8	307.0	308.1	309.4	310.5	311.6	312.8	313.9	.....
10	295.7	296.9	298.2	299.4	300.6	301.8	302.9	304.0	305.0
12	285.6	286.7	287.9	289.2	290.3	291.5	292.5	293.7	294.7
14	276.0	277.2	278.3	279.4	280.6	281.8	282.8	284.0	285.0
16	266.4	267.6	268.8	270.0	271.0	272.2	273.4	274.4	275.5
18	257.0	258.0	259.1	260.3	261.4	262.5	263.6	264.6	265.7
20	247.9	249.0	250.2	251.3	252.4	253.5	254.5	255.6	256.7
22	239.3	240.4	241.5	242.5	243.6	244.7	245.7	246.9	247.9
24	231.3	232.3	233.4	234.5	235.6	236.7	237.7	238.7	239.9
26	223.4	224.5	225.6	226.7	227.6	228.7	229.7	230.7	231.6
28	215.0	216.1	217.3	218.3	219.4	220.4	221.4	222.5	223.5
30	206.9	208.0	209.0	210.2	211.2	212.2	213.2	214.2	215.3
32	198.4	200.4	201.4	202.5	203.5	204.5	205.6	206.5	207.5
34	191.9	192.9	194.0	195.0	196.0	197.0	198.0	199.0	199.9
36	184.7	185.7	186.7	187.6	188.7	189.7	190.7	191.7	192.6
38	177.5	178.5	179.5	180.6	181.5	182.5	183.5	184.5	185.4
40	170.5	171.4	172.5	173.5	174.5	175.5	176.3	177.3	178.2
42	163.5	164.5	165.5	166.5	167.5	168.5	169.5	170.5	171.5
44	156.7	157.7	158.7	159.7	160.7	161.6	162.5	163.5	164.5
46	150.2	151.0	152.0	153.0	154.0	155.0	155.9	156.8	157.7
48	143.7	144.7	145.8	146.7	147.7	148.6	149.6	150.5	151.5
50	137.2	158.2	139.2	140.2	141.1	142.0	143.0	143.8	144.7

TABLE 1—*Continued*

Per Cent NH_3	Absolute Pressure								
	148	150	152	154	156	158	160	162	164
10	306.3	307.4	308.4	309.4	310.5	311.6	212.6	313.6	314.7
12	295.8	297.0	298.0	299.0	300.2	301.2	302.2	303.2	304.1
14	286.1	287.8	288.3	289.3	290.4	291.4	292.4	293.3	294.2
16	276.5	277.5	278.6	279.6	280.7	281.7	282.8	283.7	284.6
18	266.9	268.0	269.0	270.0	271.0	272.0	273.0	273.8	274.8
20	257.6	258.6	259.7	260.7	261.7	262.6	263.6	264.5	265.5
22	248.9	250.0	250.9	251.9	252.9	253.9	254.9	255.8	256.6
24	240.8	241.9	242.8	243.7	244.8	245.7	246.7	247.6	248.5
26	232.8	233.7	234.7	235.6	236.6	237.4	238.4	239.3	240.3
28	224.5	225.5	226.5	227.4	228.4	229.3	230.3	231.2	232.0
30	216.3	217.3	218.3	219.2	220.2	221.1	222.0	223.0	224.0
32	208.5	209.4	210.3	211.1	212.1	213.1	213.8	214.6	215.4
34	200.8	201.7	202.6	203.5	204.4	205.3	206.1	206.9	207.7
36	193.6	194.5	195.5	196.4	197.4	198.3	199.1	199.9	200.6
38	186.3	187.3	188.1	189.1	190.0	190.8	191.7	192.6	193.4
40	179.1	180.1	181.0	182.0	182.9	183.8	184.6	185.5	186.4
42	172.4	173.3	174.2	175.1	175.9	176.9	177.7	178.4	179.2
44	165.4	166.3	167.2	168.0	168.7	169.8	170.8	171.4	172.2
46	158.6	159.4	150.3	161.3	162.1	162.0	163.8	164.5	165.3
48	152.4	153.3	154.1	155.0	155.8	156.7	157.5	158.3	159.0
50	145.5	146.4	147.3	148.0	149.0	149.8	150.7	151.5	152.3

Per Cent NH_3	Absolute Pressure								
	166	168	170	172	174	176	178	180	182
10	315.6	316.6	317.6	318.7	319.7	320.8	321.7	322.7	323.6
12	305.1	306.1	307.1	308.1	309.1	310.1	311.0	312.0	313.0
14	295.2	296.2	297.1	298.1	299.0	300.0	301.0	302.0	302.9
16	285.5	286.4	287.3	288.3	289.2	290.1	291.1	292.0	293.0
18	275.7	276.7	277.6	278.5	279.5	280.5	281.4	282.4	283.3
20	266.5	267.5	268.4	269.3	270.3	271.3	272.3	273.3	274.1
22	257.5	258.4	259.3	260.2	261.1	262.1	263.0	263.9	264.7
24	249.4	250.3	251.0	252.0	253.0	253.8	254.6	255.5	256.5
26	241.1	242.0	243.0	243.8	244.6	245.5	246.3	247.2	248.0
28	232.9	233.7	234.5	235.4	236.3	237.1	238.0	238.9	239.8
30	224.9	225.8	226.7	227.5	228.4	229.3	230.1	231.1	231.8
32	216.3	217.0	217.7	218.6	219.5	220.4	221.2	222.0	223.0
34	208.4	209.2	210.0	210.9	211.7	212.5	213.4	214.2	215.0
36	201.4	202.2	202.9	203.7	204.4	205.2	206.0	206.8	207.5
38	194.1	194.9	195.6	196.3	197.0	197.8	198.6	199.3	200.0
40	187.2	188.0	188.9	189.8	190.5	191.2	192.0	192.8	193.6
42	180.0	180.6	181.4	182.2	183.0	183.7	184.5	185.3	186.0
44	173.9	173.6	174.3	175.0	175.8	176.8	177.3	178.2	178.9
46	166.0	166.8	167.5	168.3	169.0	169.7	170.5	171.3	152.0
48	159.1	160.5	161.2	161.9	162.7	163.3	164.1	164.9	165.8
50	153.8	154.1	154.9	155.5	156.3	157.2	158.1	158.7	159.5

Per Cent NH_3	Absolute Pressure								
	184	186	188	190	192	194	196	198	200
10	324.5	325.5	326.5	327.0	328.2	329.0	329.9	330.7	331.6
12	313.9	314.7	315.7	316.5	317.3	318.3	318.1	320.0	320.7
14	303.7	304.6	305.6	306.5	307.4	308.4	309.3	310.3	311.1
16	293.9	294.9	295.7	296.6	297.6	298.5	299.5	300.5	301.3
18	284.2	285.1	286.0	287.0	287.9	288.9	289.9	290.8	291.7
20	275.0	276.0	277.0	278.0	278.9	279.9	280.8	281.7	282.7
22	265.6	266.5	267.5	268.5	269.3	270.3	271.2	272.1	273.0
24	257.4	258.2	259.1	260.0	260.9	261.8	262.7	263.6	264.5
26	248.9	249.7	250.6	251.5	252.3	253.0	253.9	254.8	255.8
28	240.6	241.5	242.4	243.2	244.0	244.9	245.8	246.7	247.5
30	232.6	233.5	234.4	235.1	236.0	236.8	237.7	238.7	239.3
32	223.8	224.7	225.5	226.4	227.3	228.2	229.1	230.0	230.8
34	215.9	216.7	217.5	218.3	219.2	220.0	220.8	221.7	222.5
36	208.3	209.0	209.8	210.6	211.3	212.0	212.9	213.7	214.4
38	200.7	201.6	202.3	203.0	203.8	204.5	205.2	206.0	206.8
40	194.3	195.0	195.7	196.5	197.3	198.1	198.7	199.4	200.1
42	186.9	187.6	188.3	189.2	190.0	190.7	191.5	192.3	193.0
44	179.7	180.5	181.3	182.0	182.8	183.5	184.3	185.1	185.0
46	172.8	173.6	174.3	175.2	175.9	176.7	177.4	178.3	179.9
48	166.4	167.1	167.9	168.6	169.3	170.1	170.9	171.7	172.5
50	160.3	161.0	161.8	162.4	163.2	163.9	164.7	165.3	166.0

Fig. 2. General Arrangement of the York Absorption Machine

Heat of Absorption. Let x_1 = concentration of the weak solution or weight of ammonia in one pound of the solution.

n = number of lb. of water to one pound of ammonia in solution.

$$x_1 = \frac{1}{1+n}.$$

m = number of lb. of ammonia gas added to the solution.

x_2 = the concentration of the resulting strong solution.

$$x_2 = \frac{1+m}{1+n+m}.$$

x = the mean concentration.

$$= \frac{x_1 + x_2}{2}.$$

The heat developed or liberated when one pound of ammonia gas is added to a solution already containing some ammonia, having a concentration of x_1 (weak solution), may be determined by the following formula, in accordance with the experiments of *Hilde Mollier*:

$$h = 887 - 350\,x - 400\,x^2 \text{ B.t.u.}$$

The formula holds good for values of x up to about 0.60. For this value and higher values h remains constant and is 540 B.t.u..

The heat developed when one pound of ammonia is added to water so that the final concentration is x is given by:

$$h = 893\,x - \frac{142.5\,x^2}{1-x} \text{ B.t.u.}$$

Amount of Liquor to be Circulated. For 1 lb. of anhydrous ammonia passing through the condenser and evaporating coils G lb. of strong solution must be circulated by the pump and $(G-1)$ lb. of weak liquor enters the absorber.

The weight G depends upon the strengths or degree of concentration of the strong and weak solutions.

Let x_1 = the strength of the weak solution (lb. of ammonia to 1 lb. of solution).

x_2 = the strength of the strong solution.

$$G = \frac{1-x_1}{x_2 - x_1}.$$

For example: Assuming a strength, $x_2 = 0.28$ and $x_1 = 0.20$,

$$G = \frac{1 - 0.20}{0.28 - 0.20} = 10.$$

Hence, for 1 lb. of anhydrous ammonia passing through the evaporating coils, 10 lb. of strong liquor must be circulated by the pump and $10 - 1$ or 9 lb. of weak liquor will reach the absorber.

Table 2 gives values of h and G for various concentrations of weak and strong solutions (*Goodenough*): $(h = 887 - 350\,x - 400\,x^2)$.

Relative Weights of Superheated NH_3 Gas and Water Vapor per Cu. Ft. Generated. According to *Dalton's* law for mixtures of perfect gases, the total pressure existing in the generator or analyzer is made up of the partial pressures of water vapor and NH_3 gas corresponding to the temperature required to boil the strong solution. This law is only approximately true for mixtures of superheated NH_3 and water vapor.

TABLE 2

HEAT OF ABSORPTION h AND WEIGHT G OF STRONG LIQUOR CIRCULATED PER POUND OF NH_3

(h in B.t.u.; G in lb.)

Concentration of Weak Solution		Concentration of Strong Solution								
		0.20	0.22	0.24	0.26	0.28	0.30	0.32	0.35	0.40
0.10	h =	825	821	816	811	806	801	796	788	774
	G =	9.0	7.5	6.43	5.63	5.0	4.5	4.09	3.6	3.0
0.12	h =	821	816	811	806	801	796	791	783	769
	G =	11.0	8.8	7.33	6.29	5.5	4.9	4.4	3.83	3.14
0.14	h =	816	811	806	801	796	791	786	777	763
	G =	14.3	10.75	8.6	7.17	6.14	5.19	4.8	4.1	3.31
0.15	h =	814	809	804	799	793	788	783	774	761
	G =	17.0	12.14	9.44	7.73	6.54	5.67	5.0	4.25	3.4
0.16	h =	811	806	801	796	791	786	780	772	758
	G =	21.0	14.0	10.5	8.4	7.0	6.0	5.25	4.32	3.5
0.18	h =	806	801	796	791	786	780	775	766	752
	G =	....	20.5	13.67	10.25	8.2	6.83	5.7	4.82	3.73
0.20	h =	....	796	791	786	780	775	769	761	746
	G =	....	40.0	20.0	13.3	10.0	8.0	6.7	5.3	4.0

In the "Journal" of the *American Chemical Society*, Vol. 83, it is shown that for low pressures and low percentages of NH_3 in solution that the partial water vapor pressure is directly proportional to the number of molecules of water in the solution.

Assuming that this holds good for higher pressures, we may approximate the vapor pressure existing in the analyzer by the following formula (*Spangler*). All pressures are in lb. per square inch absolute:

Let x = per cent of NH_3 by weight in one lb. of the solution.

p = total pressure existing in the generator, rectifier, and condenser (gage pressure + 14.7). This is fixed by the ammonia condenser temperature and pressure.

p_1 = pressure of saturated water vapor corresponding to its temperature (from the steam tables).

p_2 = pressure of NH_3 gas.

p_3 = partial water vapor pressure.

$$p_3 = p_1 \times \frac{1700 - 17\,x}{1700 + x}.$$

$$p_2 = p - p_3.$$

One cubic foot leaving the analyzer and entering rectifier consists of 1 cu. ft. of superheated NH_3 gas and 1 cu. ft. of steam.

Let d_2 = density or weight per cu. ft. of NH_3 gas at pressure p_2.

d_3 = density or weight per cu. ft. of steam at pressure p_3.

Then each cu. ft. of vapor contains d_2 lb. of NH_3 gas and d_3 lb. of water vapor, and for each lb. of NH_3 gas entering rectifier, we will have $\frac{d_3}{d_2}$ lb. of water vapor.

If v_2 = specific volume of 1 cu. ft. NH_3 gas at pressure p_2.

v_3 = specific volume of 1 cu. ft. vapor at pressure p_3.

Then $d_2 = \frac{1}{v_2}$ and $d_3 = \frac{1}{v_3}$.

Consult superheated steam and ammonia tables for value of d_2 and d_3.

Heat to be Supplied Generator (H_g). The heat to be supplied the generator in the form of steam to be condensed in the coils may be estimated by the following method:

All calculations are conveniently made on a basis of one pound of active NH_3 passing through the evaporating coils. The amount of ammonia to be circulated per ton of refrigeration depends upon the condensing pressure and the temperature desired in the evaporating coils as was previously shown to be the case in the compression system.

The total heat taken into the system must be equal to that removed, radiation from apparatus neglected.

Let H_g = B.t.u. to be supplied generator per lb. of active NH_3 passing through evaporating coils.
H_r = B.t.u. to be removed from the rectifier per lb. of NH_3.
H_c = B.t.u. to be removed from the condenser per lb. NH_3.
H_e = B.t.u. taken in by the evaporating coils per lb. NH_3.
H_a = B.t.u. to be removed from the absorber per lb. NH_3.
H_i = B.t.u. loss in heat exchanger per lb. NH_3.

Then $H_g + H_e = H_a + H_c + H_r + H_i$,

and $H_g = H_a + H_c + H_r - H_e + H_i$.

The weight of saturated steam to be supplied the generator coils per lb. of active NH_3 circulated is:

$W = \frac{H_g}{r}$ plus 15 to 20 per cent for radiation losses, in which r is the latent heat of steam corresponding to the pressure carried in the coils. The temperature of the steam in the coils should not be less than the boiling temperature of the weak solution used.

Heat to be Removed from the Rectifier (H_r). The rectifier or dehydrator performs the function of a steam condenser. The temperature t_3 of the gas leaving the rectifier need only be approximately 10 degrees higher than the condenser temperature t_c to condense out most of the water vapor (approximately 95 per cent), leaving the NH_3 gas practically dry and uncondensed. The condensing temperature of the water vapor corresponding to its pressure (p_3) is less than the condensing temperature of NH_3 corresponding to its pressure (p_2).

For practical purposes of calculation it is sufficiently accurate to assume that all of the water vapor is condensed out of the mixture of water and ammonia vapor, coming from the analyzer, in the rectifier. As previously shown for each lb. of NH_3 gas entering rectifier we will have $\frac{d_3}{d_2}$ lb. of water vapor.

This condensed vapor will absorb some NH_3, taking it out of circulation and by-passing it back to the analyzer. In order to determine the amount of NH_3 vapor which this weight $\left(\frac{d_3}{d_2}\right)$ of water vapor will absorb, it is first necessary to determine the maximum concentration x_m possible for the absolute temperature of the solution T_s and the absolute temperature T_a of saturated ammonia vapor corresponding to the partial pressure p_2. From the relation given by the following equation solve for x_m.

$$T_s = \frac{T_a}{0.00466\, x_m + 0.656}$$

The initial concentration of the water vapor is assumed the same as the strong solution used or x_3. The weight of ammonia absorbed by $\frac{d_3}{d_2}$ lb. of water condensed is $w = \frac{d_3}{d_2} \times \frac{x_m}{x_2}$ per lb. of NH_3 entering rectifier. Then for 1 lb. of active NH_3 passed to condenser and evaporating coils

$w_2 = 1 + \frac{d_3}{d_2}\frac{x_m}{x_2}$ lb. of NH_3 vapor, and

$w_3 = \frac{d_3}{d_2}\left(1 + \frac{d_3}{d_2}\frac{x_m}{x_2}\right)$ lb. of water vapor enters rectifier.

Fig. 3. Absorption Plant.

Let t_x = temperature of vapors entering rectifier (approximately 30° to 40° lower than the temperature of boiling for the strong solution concentration x_1).

t_3 = temperature leaving rectifier (approximately 10° higher than the ammonia condensing temperature t_c corresponding to the pressure p_3).

C_{ps} = mean specific heat of water vapor (approximately 0.44).

C_{pa} = mean specific heat of ammonia vapor for pressure p_3 and temperature range t_3 to t_x (approximately 0.66 for usual conditions of operation).

r_3 = latent heat of water vapor for temperature t_3.

x = mean concentration of the final solution formed by NH_3 gas absorbed by the water vapor condensed.

$= \frac{1}{2}(x_m + x_3)$.

The heat to be removed from the rectifier by the cooling water per lb. of NH_3 passing to evaporating coils on the assumption that all of the water vapor coming from the analyzer is condensed in the rectifier, is as follows:

To lower the temperature of the vapors from t_x to t_3,

$$A = (C_{pa} w_3 + C_{ps} w_3)\ (t_x - t_3) \text{ B.t.u.}$$

To condense the water vapor,

$$B = r_3 w_3 \text{ B.t.u.}$$

Heat developed by the absorption of w lb. of NH_3,

$$h = w(887 - 350x - 400x^2) \text{ B.t.u.}$$

Total heat to be removed by the cooling water,

$$H_r = A + B + h \text{ B.t.u.}$$

per lb. of active NH_3 passing through evaporating coils and producing the refrigerating effect.

Heat to be Removed by the Condenser (H_c). Assuming that the water vapor has been eliminated by the rectifier, the heat to be removed in the condenser may be found as follows:

t_3 = temperature of superheated gas arriving at the condenser (approximately $t_c + 10$).

t_c = temperature of saturated NH_3 gas corresponding to the condenser pressure.

r_c = latent heat at condenser pressure.

C_{pa} = mean specific heat, at constant pressure, of superheated ammonia vapor for condensing pressure p_3 (see diagram, Fig. 5, in the Chapter on "CompressionMachines").

Then 1 lb. of NH_3 gas condensing requires the extraction of

$$H_c = r_c + C_{pa}(t_3 - t_c) \text{ B.t.u.}$$

or $H_c = H - q_c$ as previously stated for the compression system.

Heat Taken into the System by the Evaporating Coils (H_e). The B.t.u. taken into the system per lb. of NH_3 evaporated is the so-called refrigerating effect, or $H_e = H_3 - q_c$ as previously given for the compression system.

Heat to be Abstracted from the Absorber and Weak Liquor Cooler (H_a). The weak hot liquor from the bottom of the generator is passed over to the absorber to be recharged with the NH_3 gas coming from the evaporating coils. The strong liquor formed is pumped back to the analyzer and generator to be reboiled.

When ammonia gas is dissolved in water, a considerable amount of heat is generated by the chemical action taking place. The solubility of the liquid in the absorber is diminished as its temperature rises, and unless cooled by external means it soon reaches a condition at which it ceases to absorb the gas. The temperature of the strong liquor leaving the absorber should ordinarily be kept below 125°, and 110° F. is a figure often used. Where very low steam pressure is used and low suction pressure this temperature must be considerably less.

The temperature limit of the absorber is fixed by the pressure carried in the evaporating coils which is also approximately the pressure in the absorber. The maximum absolute temperature T_s of the solution is determined by the formula previously given

$$T_s = \frac{T_a}{0.00466\, x_2 + 0.656},$$

in which T_a is the absolute temperature of the saturated ammonia gas in the evaporating coils, and x_2 the concentration of the strong solution.

In order to economize the heat, the cool strong liquor from the absorber (temperature t_a) is passed through a "heat exchanger," absorbing heat from the hot weak liquor, and enters the analyzer approximately 35 degrees cooler than the outgoing weak liquor (temperature t_g). For approximate calculations the temperature of the weak solution leaving the exchanger may be assumed 10° higher than the temperature t_a to be maintained in the absorber and cooled down to the absorber temperature in an auxiliary cooler (weak liquor cooler).

The heat developed when ammonia gas is added to a solution already containing some ammonia (weak solution) may be determined by the formula $h = 887 - 350x - 400x^2$, as previously stated.

The total amount of heat to be abstracted from the weak liquor cooler and absorber by the cooling water per lb. of active NH_3 passing through the evaporating coils may be determined as follows:

(a) Heat developed by absorption $= h_1$.

(b) To lower the temperature of $(G - 1)$ lb. of weak liquor to the temperature of the absorber, or $(G - 1) \times (t_g - t_a)$; assume the specific heat of the liquor as 1 and in which t_g is the temperature of the generator and t_a the temperature carried in the absorber.

(c) The negative quantity of heat introduced by the NH_3 gas in raising its temperature from the evaporating temperature (t_s) to the temperature of the absorber (t_a), or $-C'_{ps}(t_a - t_s)$.

Then $H_a = h_1 + (G - 1)(t_g - t_a) - C'_{ps}(t_a - t_s)$, in which C'_{ps} is the specific heat of ammonia gas for the pressure existing in the evaporating coils.

Liquor Pump. The amount of strong liquor to be handled by the pump as previously stated is

$$G = \frac{1 - x_2}{x_1 - x_2} \text{ lb. per lb. of } NH_3 \text{ gas coming from the evaporating coils.}$$

The power required for the pump is calculated from the cu. ft. to be pumped per minute and the effective pressure per sq. in. on the plunger. The effective pressure is the difference between the pressure existing in the generator and evaporating coils, plus the friction pressure loss. The steam required by the non-condensing pump, if of the fly-wheel type, with cut off, will be approximately 35 to 40 lb. per i.hp.-hour and 100 to 150 lb. per i.hp.-hour for the direct-acting type.

For capacities and speeds of pumps, see Chapter XII on "Pumps."

Notes on the Design of Absorption Machinery. The difference in the strengths of the liquors used ordinarily ranges from 5 to 10 per cent. The concentration of weak liquor may be assumed in high-pressure plants as approximately 20 per cent NH_3 and the strong liquor as 28 per cent NH_3, by weight for ordinary conditions of operation, and 38 per cent and 30 per cent for low-pressure plants. The temperature of the steam in the coils of the generator should not be less than the temperature required to boil the strong solution.

The temperature of the vapors t_x entering the rectifier may be assumed for approximate calculations as 30° to 40° lower than the temperature t_g of the weak hot liquor, as they are cooled by the rich liquor entering at the top of the analyzer. The temperature of the NH_3 gas leaving the rectifier may be assumed as approximately 5° to 10° higher than its condensing temperature, corresponding to the condensing pressure p_3 and temperature t_c. Temperature of the strong liquor leaving absorber 110° to 130°.

A heat exchanger, of sufficient surface, will increase the temperature of the strong liquor approximately 73 per cent of the number of degrees that the weak liquor drops in temperature.

Absorption plants are usually operated with exhaust steam at 5 to 10 lb. back pressure. The concentration of the weak solution is approximately 30 per cent and that of the strong solution 38 per cent. The example following, illustrating the use of the preceding formulæ, assumes the use of live steam.

Example. Required the weight of steam to be supplied the generator of an absorption plant (Fig. 1.) and the total weight of cooling water per ton of refrigeration per minute for the following conditions of operation.

Initial temperature of cooling water, 70° F.

Temperature to be maintained in the evaporating coils, 10° F.; corresponding pressure, 38.02 lb. absolute, or 23.3 lb. gage.

Machine to be operated with a 28 per cent (x_1) strong solution and 20 per cent (x_2) weak solution.

Solution. The condensing temperature t_c for the ammonia fixes the total pressure to be carried in the generator, analyzer, rectifier, and condenser.

Assume a 15° rise in temperature for the cooling water, giving a final temperature of 70 + 15 = 85°, and allow a 10° difference between the final temperature of cooling water and the ammonia condensed. This gives 85 + 10 or 95° F. for the condenser temperature, and the corresponding pressure is p_3 = 197.3 lb. absolute or 182.6 lb. gage.

The lowest temperature possible to boil a 28 per cent solution for $p_3 = 197$, $T_c = 95° + 460°$,

$$T_z = \frac{95 + 460}{0.00466 \times 28 + 0.656} = 706° \text{ absolute, or } 246° \text{ F.}$$

To boil the weak liquor, $x_2 = 0.20$, requires a temperature of 280° F. The temperature of the steam in the coils of generator should not be less than this temperature, which corresponds to a pressure of 49.7 lb. absolute, or 35 lb. gage.

The temperature of the vapors leaving the generator correspond to the temperature required to boil the strong solution, or 246°. This is also the temperature of the weak hot liquor leaving the generator.

The vapors coming from the generator are cooled down in the analyzer to approximately the temperature of the strong liquor from the heat exchanger and absorber so that the temperature of the vapors entering the rectifier will be approximately $t_x = 200°$.

The temperature limit of the absorber is given by

$$T_z = \frac{10 + 460}{0.00466 \times 28 + 0.656} = 598° \text{ absolute, or } 138° \text{ F.}$$

The temperature in the absorber will therefore be maintained at 130° F.

The weight of weak liquor ($x_2 = 0.20$) at 246° to be circulated per lb. of active NH_3, is $G - 1$.

The weight of strong liquor ($x_1 = 0.28$) at 130° coming from absorber per lb. of active NH_3, is:

$$G = \frac{1 - 0.20}{0.28 - 0.20} = 10 \text{ lb. and } G - 1 = 9 \text{ lb. of weak liquor.}$$

The specific heat of the liquors is taken as 1.

These liquors are passed through a countercurrent heat exchanger from which a radiation loss of 25 per cent is assumed. The temperature of the weak liquor leaving the exchanger will be assumed to be 10° higher than the temperature of the entering strong liquor, or 130 + 10 = 140°. If t_x = temperature of the leaving strong liquor.

Then $10\,(t_x - 130) = 0.75 \times 9\,(246 - 140)$.

Heat absorbed by strong liquor = heat given up by weak liquor less the radiation loss.

$t_x = 201°$, say 200°.

The radiation loss $H_i = 0.25 \times 9\,(246 - 140) = 238$ B.t.u.

Rectifier. The condition of the vapors entering rectifier is as follows:

Total pressure $p = 197.3$ lb. The water vapor pressure corresponding to a temperature of 200° is $p_1 = 11.53$ lb.

The partial water vapor pressure for a concentration of $x = 28$ per cent is:

$$p_3 = 11.52 \times \frac{1700 - 17 \times 28}{1700 + 28} = 8.2 \text{ lb.}$$

The partial ammonia vapor pressure is:

$$p_2 = 197.3 - 8.2 = 189.1 \text{ lb.}$$

The corresponding saturation temperature for the water vapor is 184° and for the ammonia is 92° F. The superheat of the water vapor is 200 − 184 = 16°, and for the ammonia vapor, 200 − 92 = 108°. The specific volume of the water vapor is $V_3 = 48$ cu. ft. and for the ammonia vapor $V_2 = 2.0$ cu. ft.

Each cu. ft. of the mixture entering the rectifier contains:

$$d_3 = \frac{1}{V_3} = \frac{1}{48} = 0.021 \text{ lb. water vapor.}$$

$$\text{and } d_2 = \frac{1}{V_2} = \frac{1}{2} = 0.50 \text{ lb. ammonia vapor.}$$

The weight of water vapor entering the rectifier per lb. of NH_3 is $\frac{0.021}{0.50} = 0.042$ lb.

It will be assumed, for convenience, that all of the water vapor will be condensed in the rectifier. The weight of NH_3 vapor which this weight of water will remove will now be found.

The concentration of the vapor entering rectifier is $x_1 = 28$ per cent. The temperature of the vapors is reduced in the rectifier to within approximately 10° of the ammonia-condenser temperature, or 95 + 10 = 105° F.

The maximum possible concentration of the rich liquor drip from the rectifier, formed by the absorption of NH_3 by the condensed water vapor, is found by the formula

$$T_s = \frac{T_a}{0.00466\, x_m + 0.656}.$$

$$T_s = 105 + 460 = 565$$

$$T_a = 95 + 460 = 555,$$

$$x_m = 70 \text{ per cent.}$$

from which the weight of NH_3 absorbed by 0.042 lb. condensed water vapor, to produce a concentration of 70 per cent, is $0.042 \times \frac{0.70}{1 - 0.70} = 0.098$ lb. per lb. of NH_3 entering rectifier.

The weight of NH_3 leaving the rectifier per lb. of NH_3 entering is $1.0 - 0.098 = 0.902$ lb.

The quantities per lb. of active NH_3 passing to condenser and evaporating coils are:

Weight of NH_3 entering rectifier $\frac{1.0}{0.902}$	= 1.108 lb.
Weight of NH_3 leaving rectifier	= 1.000 lb.
Weight of NH_3 absorbed	= 0.108 lb.
Weight of water vapor condensed $\frac{0.046}{0.902}$	= 0.051 lb.

The heat to be removed may now be approximated.

To lower the temperature of the vapors from 200° to 105° F.:

$(0.44 \times 0.051 + 0.76 \times 1.108)\ (200 - 105)$ = 82 B.t.u.

To condense out the water vapor:

0.051×1033 (latent heat, at 105° F.) = 53 B.t.u.

Heat developed by the absorption of 0.108 lb. NH_3 ($x = 0.70$):

$$0.108 \left(893 - \frac{142.5 \times \overline{0.70}^2}{1.0 - 0.70}\right) = 71 \text{ B.t.u.}$$

Total H_r = 206 B.t.u.

per lb. of active NH_3

Ammonia Condenser. The heat to be removed from the condenser on the assumption that all of the water vapor has been removed in the rectifier, leaving only dry ammonia gas to be condensed, is: $H_c = r_s + c_p\,(t - t_c)$ in which $t = 105$, $t_c = 95$, $c_p = 0.76$, $r_s = 488.5$ for 95° F. $\therefore$ $H_c = 496$ B.t.u. per lb. of NH_3.

Absorber and Weak Liquor Cooler. The heat developed by the absorption of 1 lb. of NH_3 to change the concentration from $x_1 = 0.20$ to $x_2 = 0.28$ (mean concentration $x = \frac{1}{2}\,(0.20 + 0.28) = 0.24$) is:

$887 - 350 \times 0.24 - 400 \times 0.24^2$	= 780 B.t.u.
To lower the temperature of $(G - 1)$ or 9 lb. of weak liquor in the weak liquor cooler, if used, from 140° to 130°; 9×10	= 90 B.t.u.
The negative quantity of heat introduced by the cold NH_3 gas from the expansion coils $0.60\ (130 - 10)$	= − 72 B.t.u.
Total H_a	= 798 B.t.u.

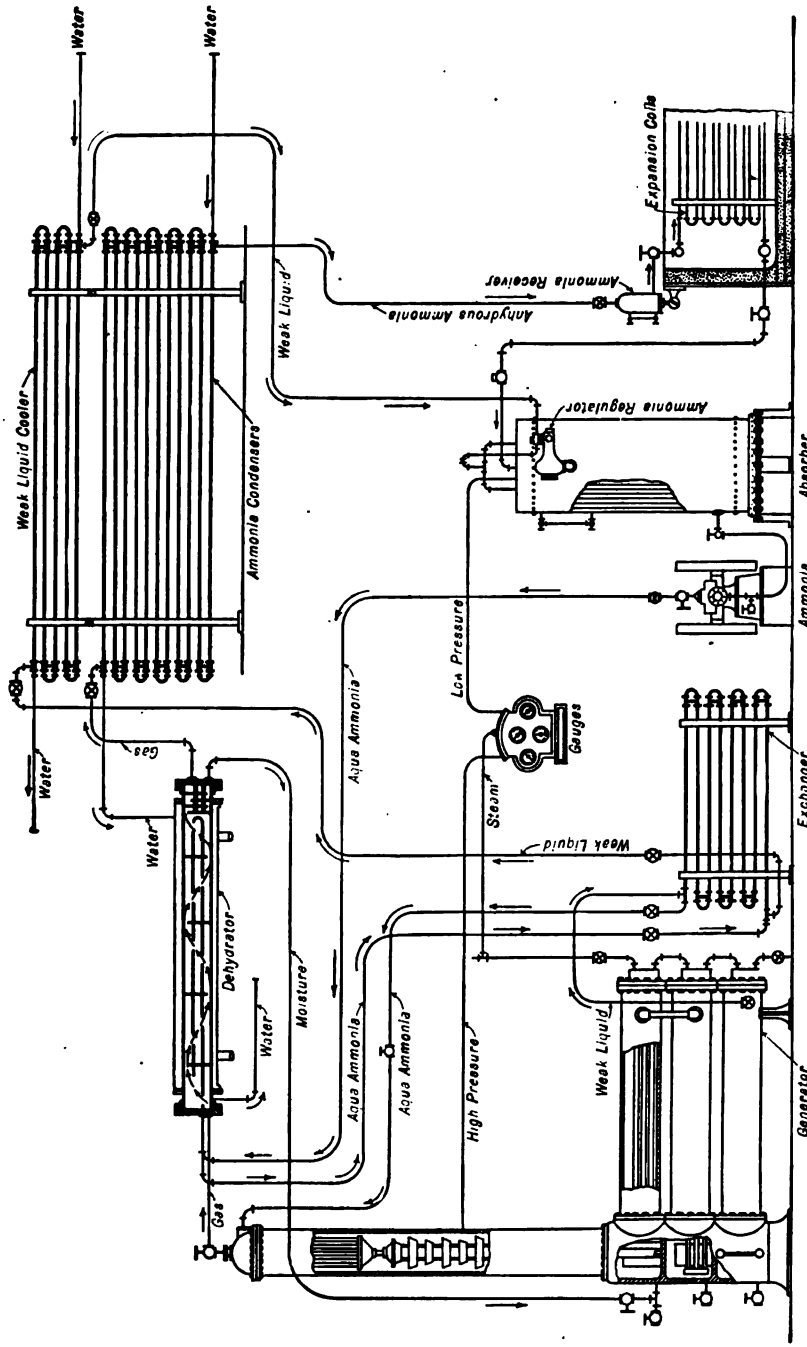

PIPING DIAGRAM, ABSORPTION PLANT

FIG. 4.

Evaporating Coils. The heat taken into the system by the evaporating coils is $H_e = H_s - q_c$, in which H_s is the total heat for $t_o = 10°$, the temperature maintained in evaporating coils, and q_c the heat of the liquid at condenser temperature $t_c = 95°$.

$H_e = 541.2 - 71.3 = 469.9$ B.t.u.; this is the "refrigerating effect" per lb. of NH_3. The weight of ammonia to be circulated per min. per ton of refrigeration, 24 hours, is: 200 / 470 or 0.425 lb.

Generator. The heat to be supplied generator per lb. of NH_3 is:

$$H_g = 206 + 496 + 798 - 470 + 238 = 1268 \text{ B.t.u.}$$

Assuming a 10 per cent loss by radiation from the generator, then

$$\frac{0.425 \times 60 \times 1268}{0.90} = 323{,}340 \text{ B.t.u.}$$

are to be supplied by the steam per hour. With a steam pressure of 35 lb. gage, the latent heat is $r = 923$, hence the weight of dry steam per hour per ton of refrigeration produced, 24 hours, is

$$\frac{323{,}340}{923} = 350 \text{ lb.}$$

Cooling Water Required. The cooling water used for ammonia condenser having an initial temperature of 70° and final temperature of 85° per lb. of NH_3 condensed is 496 / 15 = 33 lb.

This water is used in the rectifier, where its temperature is further raised to 95° F. The amount required is 228/(95 − 85) = 22.8 lb.

Leaving the rectifier the water may be used in high-pressure machines for cooling the absorber, where its temperature may be raised to approximately 120° F. The amount required is 798 / (120 − 95) = 31.5 lb.

The amount of cooling water is therefore the same as is required for a compression plant operating with the same condenser and evaporator temperatures, as determined by the condenser requirement.

For the conditions stated by this example the amount of water required is $\frac{0.425 \times 33}{8.33}$ or 1.68 gals. per min. per ton of refrigeration per 24 hours.

The path of the cooling water is ordinarily, in low-pressure machines, over condenser to rectifier then to sewer. This arrangement, according to calculations, requires 798/(120 − 70) or 20 lb. per 1 lb. NH_3, or $\frac{0.425 \times 20}{8.33} = 1.02$ gal. per min. per ton of refrigeration, making a total of 1.68 + 1.02 = 2.7 gal. Usually about 3.25 gal. per min. per ton should be allowed in practice.

Steam Required per Ton of Refrigeration from Tests. The following data, based on various gage condensing pressures and 15.67 lb. gage evaporator pressure, on actual steam consumption per ton of refrigeration was furnished by one prominent manufacturer of absorption plants:

TABLE 3

Steam Pressure	Condensing Pressure						
	125	135	145	155	165	175	185
1	34.3	35.5	....	....	....	....	....
3	34.1	35.3	36.7	....	....	....	....
5	33.9	35.1	36.4	37.8	39.0	....	....
10	33.3	34.5	35.9	37.2	38.4	40.1	41.3
15	32.8	34.0	35.3	36.7	37.9	39.6	40.7
20	32.2	33.4	34.8	36.1	37.3	39.0	40.2
25	31.7	32.9	34.2	35.6	36.8	38.5	39.6
30	31.1	32.3	33.7	35.0	36.2	37.9	39.0
35	30.6	31.8	33.1	34.5	35.7	37.3	38.5
40	30.0	31.2	32.5	33.9	35.1	36.8	37.9
45	29.5	30.7	32.0	33.4	34.6	36.2	37.4
50	29.0	30.1	31.4	32.8	34.0	35.7	36.8

Table 3 gives steam consumptions without analyzer. If analyzer is used deduct 3 lb. per ton of refrigeration. This figure is, however, only approximate, as the difference will depend on the amount of aqua ammonia circulated.

CHAPTER XXXI

ICE-MANUFACTURING PLANTS

There are two systems in general use known as the (1) Can system, and (2) Plate system.

Can System (Figs. 1 and 2). In this system, the condensed exhaust steam from the main engine and auxiliaries, purified by reboiling and filtering, is generally frozen in galvanized sheet-steel cans immersed in a brine tank, the brine being agitated by a propeller wheel and cooled by direct expansion piping placed in the tank. The product is known as distilled-water ice.* Can ice having its growth from all sides of the can, any mechanically suspended impurities in the water will appear in the ice so formed at the center of the block, and it is therefore essential that pure water, free from such impurities, be used. The size of block that is considered a standard weighs approximately 300 lb. and is 11″ x 22″ x 44″.

Plate System. In this system (Fig. 3) a tank approximately 10′ deep by 12′ wide is employed. It is divided into compartments 30″ wide, the partitions being made up of direct expansion piping, to which are bolted ½″ plates, forming the freezing surfaces. The growth of the ice-plate in thickness being from one side only, from the freezing plate outward, the mechanically suspended impurities are separated and rejected by the slowly freezing water. The precipitated impurities are drained off at the bottom of the tank. The ice-cake is usually thawed off from the freezing plate by passing hot gas through the coils. This system does not require distilled water in order to manufacture clear ice, and may therefore be electrically driven.

The ice gradually forms in from eight to ten days to a thickness of 12″ to 14″.

The freezing tank area occupied by the plate system is about twelve times that required by the can system and the cubical contents four times as much. One advantage of the plate system is the fact that practically clear and transparent ice is produced without any special apparatus, and its chief disadvantage is the fact that in the nature of the process the building up of the ice is slow and expensive, and for continual operation several tanks are required so that one or more may be frozen while the others are being emptied. With the can system, a practically continuous process of making ice can be maintained.

The cost of the plate system is about one-third more than that of the can system. In the latter system, ice is being drawn throughout the 24 hours, and the hoisting is frequently done by hand tackle. In the plate system, the whole product is harvested, cut, and stored in a few hours, the hoisting usually being performed by power.

The Distilling System (Fig. 4). The exhaust steam from the main engine and auxiliaries is first passed through an oil separator which may or may not be a part of the feed-water heater. A portion of the exhaust steam is used in the feed-water heater to heat the incoming feed-water, which was first used as cooling water over the ammonia and steam condensers and distilled-water cooler. The amount used in heating the feed-water will depend upon the initial temperature of the feed. The remaining part, approximately 90 per cent, is passed to the steam-condenser and condensed at atmospheric pressure.

From the steam condenser the water usually flows by gravity to the reboiler and skimmer. A coil supplied by live steam boils the water at atmospheric pressure, driving off the air and gas absorbed by the water; oil and other impurities that rise to the surface are skimmed off and allowed to waste to the sewer.

---

* A clear merchantable ice may be made from raw water when the plant is equipped with the necessary air-agitating apparatus. See "Raw-Water Ice Plants."

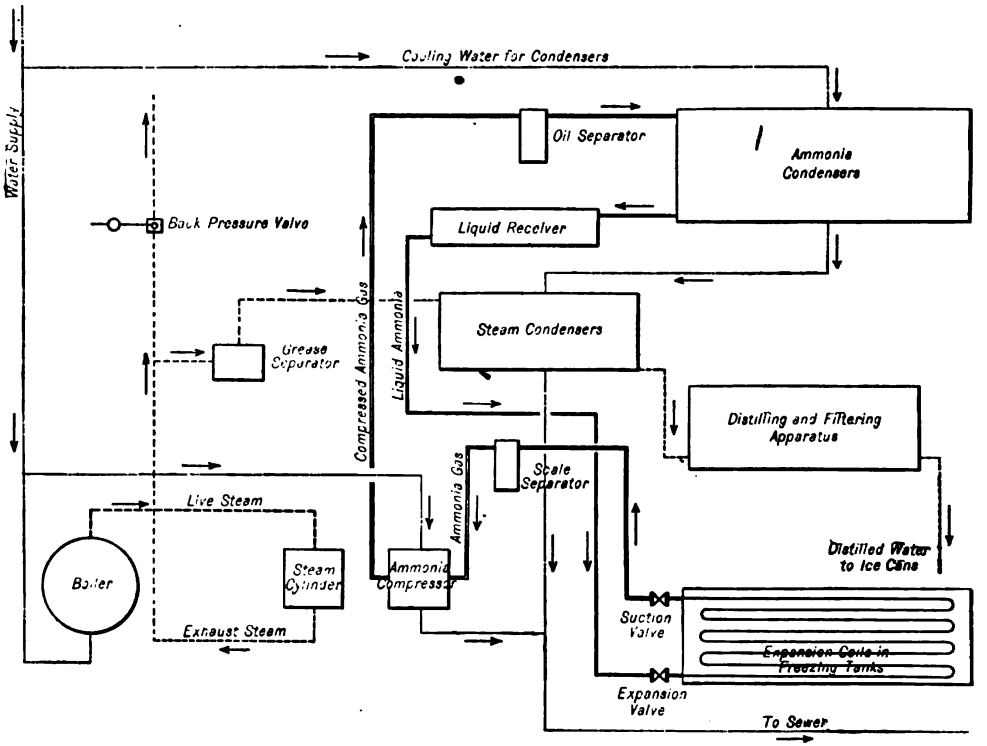

FIG. 1. DIAGRAM OF CAN-ICE PLANT—PLAN.

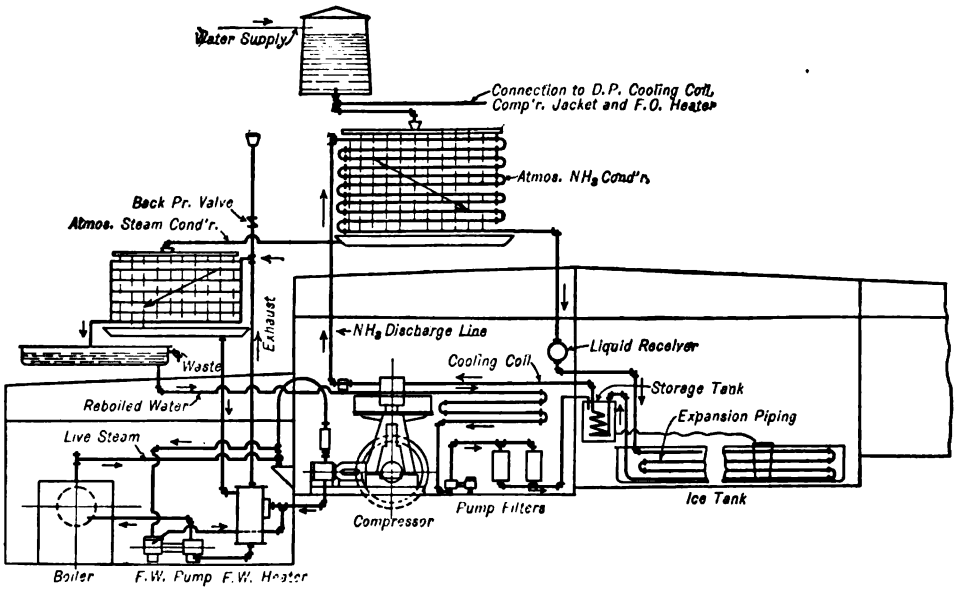

FIG. 2. DIAGRAM OF CAN-ICE PLANT—ELEVATION.

The steam coil may be either of the perforated or closed type. If perforated the high-pressure steam is reduced to practically atmospheric pressure and allowed to mix directly with the distilled water. If the closed coil is used the condensation is returned to the feed-water heater by the use of a trap.

The reboiled distilled water is then passed to the distilled-water cooler, usually of the double pipe type, where it is reduced in temperature from 210° to approximately 90° F. From the cooler

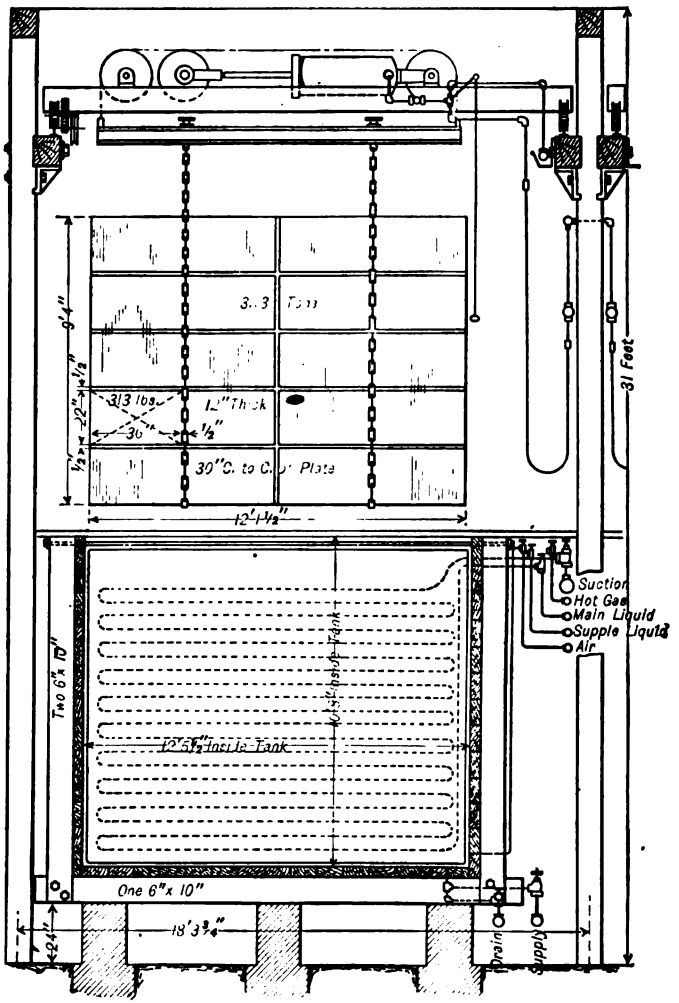

FIG. 3. FREEZING TANK PLATE ICE PLANT.

it is pumped through the filters or deodorizers, quartz, sand, or maple charcoal being used as the filtering medium. The filtered distilled water is stored and further cooled by a coil placed in the storage tank or fore cooler, through which passes the gas from the evaporating coils on its way to the compressor. The distilled water is cooled down from 90° to approximately 40° F. and is drawn out to fill the cans at the latter temperature.

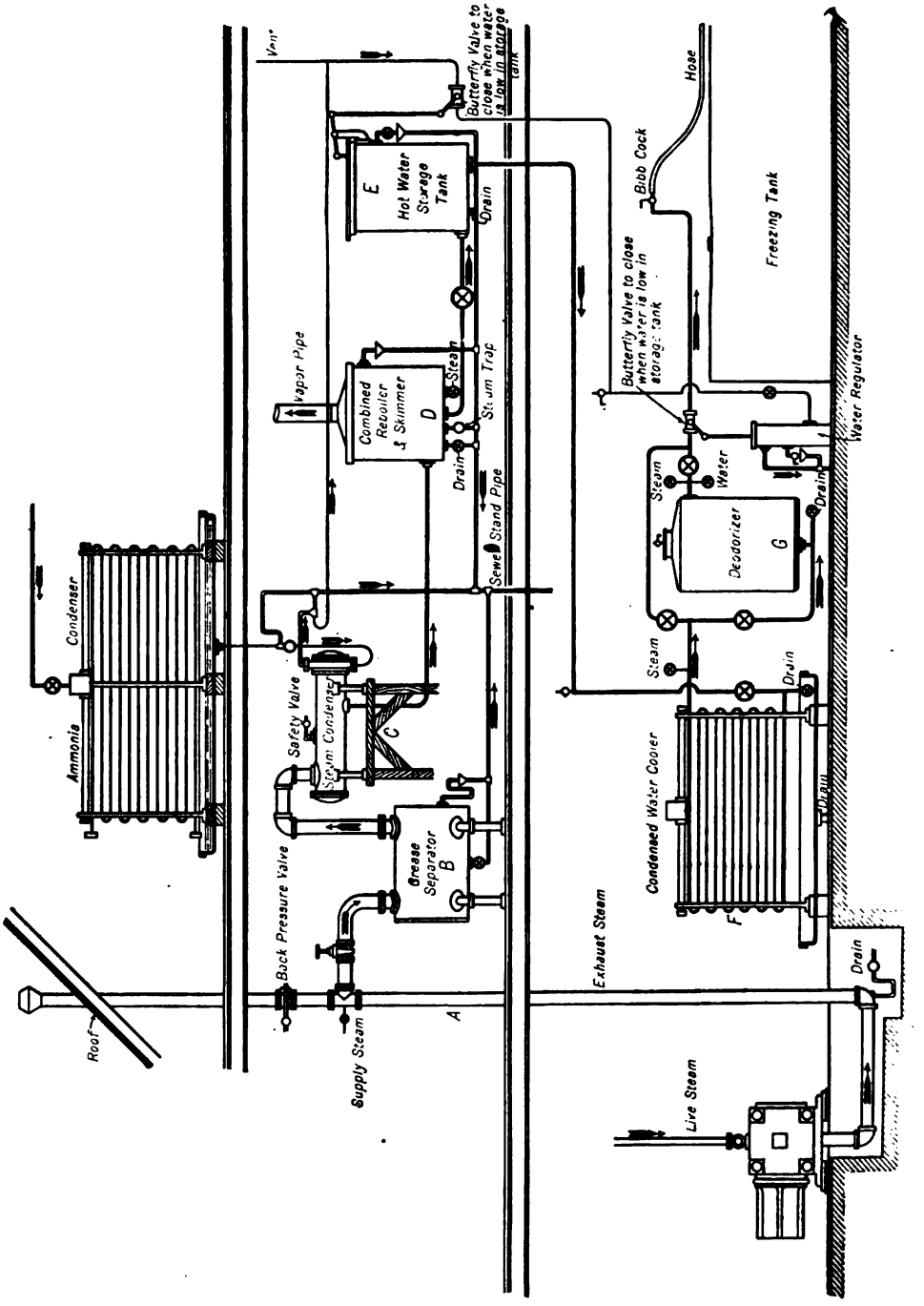

FIG. 4. DIAGRAM OF DISTILLING SYSTEM FOR CAN-ICE PLANT.

The cans are filled by means of a hose and can filler. The can filler delivers the water to the bottom of the can and is provided with a copper float which controls the supply valve and shuts off the water when the can is full.

A regulating device is provided which automatically controls the flow of water from the reboiler to the storage tank. This regulator also controls the steam supply of the pump used to circulate the distilled water through the cooler and filters.

Can-Ice Plants. The ice-making capacity of a refrigerating machine (see Table 7) is approximately 50 per cent of its refrigerating capacity, as given under the heading "Rating of Refrigerating Machines" at the beginning of Chapter XXI.

TABLE 1
SIZE OF STANDARD ICE CANS AND FREEZING TIME

Size of Can	Weight of Ice Block		Gage of Metal		Time of Freezing, Hrs.	
	Normal	Actual	Sides	Bottom	15° Brine	18° Brine
6″ x 12″ x 26″	50	56	20	20	15	20
8″ x 16″ x 32″	100	110	18	16	30	36
8″ x 16″ x 42″	150	165	18	16	30	36
11″ x 22″ x 32″	200	220	18	14	50	60
11″ x 22″ x 44″	300	315	16	14	50	60
11″ x 22″ x 57″	400	415	16	14	50	60

The temperature of ammonia in the evaporating coils will be approximately 5° to 10° lower than the temperature of the brine in the freezing tank. The following back or suction pressures are approximately required to give the brine temperatures stated:

TABLE 2
SUCTION PRESSURES REQUIRED FOR BRINE TEMPERATURES

Back pressure (gage)	5	10	15	20	25	30
Brine temperature, degs. F	5°	0°	10°	15°	20°	25°

Size of Freezing Tank.

Let W = weight of ice to be pulled every 24 hours.
= tons rating × 2000.
H = freezing time in hours.
N = number of cans required.
C = weight of one block.

Then $N = \frac{W \times H}{C \times 24}$. For 300-lb. blocks, $H = 50$, and, therefore,

$N = \frac{W}{144}$, and the number of 300-lb. cans per ton capacity rating of plant is 14.

Some manufacturers recommend 16 cans per ton capacity.

The dimensions of the freezing tank may be approximated from the data given under "Dimensions of Freezing Tanks."

Raw Water Ice Plants. The manufacture of ice from raw or undistilled water is rapidly taking the lead in the ice industry. A clear merchantable ice may be manufactured from raw water provided the water in the cans is agitated during the entire freezing period. The agitation is accomplished by air discharged under a pressure of 3 to 6 lb. per sq. in. at or near the bottom of the cans, through a 1/16-inch opening.

FIG. 5. DETAIL CONSTRUCTION OF THE TRIUMPH ICE TANK.

Water in freezing throws off impurities which collect in the core, which is the last part of the block to freeze. The unfrozen water, heavily charged with impurities, is pumped out of the center of the block before this part is entirely closed up and the space is refilled with raw water containing only the initial amount of impurities.

As this system does not require distilling apparatus, the most economical motive power available may be employed. The majority of raw water plants are motor-driven; gas and oil engines are also used where electric power is expensive. The size of motor should be ample to provide for a higher terminal pressure than is ordinarily considered for 70° F. condensing water. The motor if chosen on a 70° F. basis is quite likely to be overloaded at times when the temperature of the condensing water is higher than 70° F.

The cost of power to produce one ton of ice for average conditions is given by *Thomas Shipley* as follows:

TABLE 3

POWER COST PER TON OF ICE

Type	Source of Power	Total Hp. Hours per Day	Basis of Cost	Cost per Ton of Ice Made
Gas Engine	Producer Gas	24 × 3 = 72	72 × 1¼ = 90 lbs. coal (With coal at $3.00 per gross ton)	90 lbs. coal at 1⅓ cts. per 10 lb. = 12c. per ton of ice.
Gas Engine	Natural Gas	24 × 3 = 72	72 × 10 = 720 cu. ft. (With gas at 30c. per 1000 cu. ft.)	720 cu. ft. at 3/100c. per cu. ft. = 21⅙c. per ton of ice. Gas at 21c. = 15⅛c. per ton ice. Gas at 15c. = 10⅘c. per ton ice.
Oil Engine	Fuel Oil	24 × 3 = 72	72 × ½ = 36 lb. (With oil at ½c. per lb.)	36 lb. at ½c. per lb. = 18c. per ton of ice.
Steam Engine	Steam	24 × 3 = 72	72 × 1⅝ = 117 lb. coal (With coal at $3.00 per gross ton)	117 lbs. coal at 1½c. per 10 lb. = 15⅗c. per ton of ice.
Electric Motor*	Electric Current	24 × 3 = 72	With current at 1c. per kw.-hour = ⅘c. per hp.-hour delivered.	72 × ⅘c. per hp.-hour = 57⅗c. per ton of ice plus service charges.

* NOTE.—The cumulative power used on an electric installation is at least 15 per cent less than shown.

Expansion Pipe. Approximately 85 to 100 sq. ft. of pipe surface per ton of ice making capacity is required with good brine agitation. The maximum length of pipe for one expansion is 1200 ft.

TABLE 4

LINEAR FEET OF PIPE PER TON OF ICE

Pipe Size	15° Brine	18° Brine
1"	400′	450′
1¼"	320′	360′
1½"	270′	310′
2"	210′	240′

Ice Storage Room. The size of ice-storage rooms that are commonly used will be found on the dimension sheet for can-ice plants following.

These rooms are usually held at a temperature of approximately 28° F. The heat loss by transmission may be calculated in the usual manner. The cooling coils are hung from the ceiling;

the amount of pipe required may be taken from the tables previously given. The floors of these rooms are frequently covered with wood slats. The insulation may be 4" of corkboard.

TABLE 5

EFFECT OF VARIATIONS IN CAN ALLOWANCE ON HORSEPOWER REQUIRED TO PRODUCE ONE TON OF ICE

(With Single Acting Compressor)

1	2	3	4	5	6
No. 300-lb. Cans per Ton Ice Making	Average Brine Temperature Needed to Produce Ice	Rate of Heat Transmission B.t.u. per Sq. Ft. per Hr. 1° M. D.	Temperature Required in Pipe	Corresponding Evaporating G. Pressure	Total Brake Hp. per Ton Ice Making 185 Lb. C. P.
10	7° F.	15	− 3.3° F	13.3 lb.	2.77
12	11	15	+ 0.7	16.2	2.56
14	14	15	3.7	18.5	2.45
16	16	15	5.7	20.	2.352
18	18	15	7.7	21.7	2.27

NOTE.—Evaporating surface in the freezing tank assumed in this table is 108 sq. ft. or 250 ft. of 1¼" pipe per ton of ice.

NOTE.—Tables Nos. 5 and 5-*a* assume that the water to be frozen is delivered to the cooling and freezing system at 70° F.

Work done by cooling system = 30 B.t.u. per lb. of ice.

Work done by freezing system = 200 B.t.u. per lb. of ice.

TABLE 5-*a*

EFFECT OF VARIATIONS IN EVAPORATING SURFACE ON HORSEPOWER REQUIRED TO PRODUCE ONE TON OF ICE

(With Single Acting Compressor.)

1	2	3	4	5	6	7
Lineal Ft. of 1¼" Pipe per Ton of Ice Making	Square Ft. External Pipe Surface	Rate of Heat Transmission B.t.u. per Sq. Ft. per Hr. per 1° M. D.	Average Temperature of Brine	Temperature Required in Pipe	Corresponding Evaporating G. Pressure	Total Brake Hp. per Ton Ice Making 185 Lb. C. P.
150	65	15	16° F.	− 1.1° F.	14.85 lb.	2.661
200	87	15	16	3.2	18.1	2.468
250	108	15	16	5.7	20.0	2.352
300	130	15	16	7.45	21.5	2.279
350	152	15	16	8.7	22.5	2.218

NOTE.—1¼" pipe coils vertically arranged between the cans and operated under flooded conditions.

Water Required for Can-Ice Plants. The condensing water is first used over the ammonia condenser, then over the steam condenser; and if the quality is such that it may be used in the boilers, it is passed to the feed-water heater. If the feed-water heater is of the open type the temperature may be raised to 210° F., at which temperature it enters the boilers. (See "Feed Water Heaters," Chapter IX.)

Leaving the boilers in the form of live steam this water is used in the main engine and auxiliaries, from which it is discharged as exhaust steam to be condensed in the steam condenser.

TABLE 6

WATER CONSUMPTION PER TON OF ICE (Compression Plants)

(*O. Gueth*)

Initial temperature water over ammonia condenser	55°	60°	70°	80°
Water temperature entering steam condenser	80°	85°	90°	95°
Water temperature leaving steam condenser	125°	125°	125°	125°
Gallons per minute	4	4.5	5.15	6

From the previous calculations we have for an initial temperature of cooling water of 70°:

NH_3 condenser = 3.00 gals. per min. per ton of ice-making capacity.
Distilled water cooler = 1.30 gals. per min.
Total = 4.30 gals. per min.

To the above amount should be added approximately 20 per cent for contingencies and waste.

The amount of water required for the cooler is calculated later.

Steam Condensers. The water from the NH_3 condenser is used over the steam condenser. Taking the figures as given in the example under NH_3 condensers (Chapter XXVI) the amount of water leaving the NH_3 condenser is 1.50 gals. per minute per ton of refrigeration at a temperature of 90° for a head pressure of 182.6 lb. gage and initial temperature of cooling water of 70°.

To condense one ton of water per 24 hours for distilled-water ice requires the extraction of $\frac{2000 \times 971}{24 \times 60}$ or 1347 B.t.u. per minute (971 = latent heat at atmospheric pressure).

To manufacture one ton of ice requires approximately two tons of refrigeration per 24 hours.

$1.50 \times 2 \times 8.33 \times (t - 90) = 1347$ B.t.u. $t = 151°$ F., final temperature of the cooling water leaving steam condenser for the assumed conditions.

Distilled Water Cooler. Assume the initial temperature of cooling water as 70° F., initial temperature of distilled water from reboiler 210°, final temperature of cooled water 90°, and a final temperature of the cooling water 5° lower than the final temperature of the cooled water, or 85° F.

Then each lb. of distilled water requires $\frac{210 - 90}{85 - 70} = 8$ lb. cooling water, and 1 ton of distilled water, 24 hours, requires the circulation of $\frac{2000 \times 8}{24 \times 60 \times 8.33} = 1.3$ gals. cooling water per minute.

Fuel Consumption in Ice Plants. *Compression System.* Assuming an average steam consumption for the main engine (Corliss type) of 27 lb. per i.hp.-hour and an additional amount, approximately 4 per cent, to operate the feed pump, the total is 28 lb. per i.hp.-hour. The agitator engine and distilled water pump will require approximately 8 lb. steam per hour per ton of ice-making capacity.

$$\frac{1.75 \text{ (tons of refrigeration per ton ice)} \times 1.5 \text{ (compressor i.hp. per ton refrigeration)}}{0.85 \text{ (mech. eff. engine and compressor)}} \times 28 =$$

87 lb. steam per ton of ice-making capacity per hour for main engine and feed pump. Then $87 + 8 = 95$ lb. exhaust steam is available. Adding approximately 10 per cent for waste in reboiler and filling cans gives 105 lb. water to be evaporated per hour. This is equivalent to or approximately 3½ boiler horsepower per ton of ice-making capacity.

TABLE 7

DISPLACEMENT AND BRAKE HORSEPOWER PER TON ICE-MAKING IN 24 HOURS—(*York Mfg. Co.*)

Single and Double-Acting Compressors—Dry Compression

Condenser Gage Pressure and Corresponding Temperature = Temperature of Liquid at Expansion Valve		Suction Gage Pressures and Corresponding Temperatures															
								12.5 Lb. − 4.6° F.		15.67 Lb. 0° F.		17.5 Lb. + 2.5° F.		20 Lb. 5.7° F.		22.5 Lb. 8.7° F.		25 Lb. 11.5° F.	
								Cubic Inches Displacement	Brake Hp. at the Machine	Cubic Inches Displacement	Brake Hp. at the Machine	Cubic Inches Displacement	Brake Hp. at the Machine	Cubic Inches Displacement	Brake Hp. at the Machine	Cubic Inches Displacement	Brake Hp. at the Machine	Cubic Inches Displacement	Brake Hp. at the Machine
85 lb. = 56° F.	S. A.	17,776	1.971	15,696	1.786	14,080	1.654	12,496	1.496	11,056	1.355	10,544	1.269	9,632	1.162	8,976	1.077	8,400	0.994
	D. A.	20,640	2.253	18,000	2.024	15,968	1.866	14,528	1.681	12,560	1.505	11,840	1.426	10,880	1.285	10,096	1.188	9,312	1.091
105 lb. = 65.7° F.	S. A.	18,560	2.288	16,368	2.059	14,640	1.918	13,056	1.769	11,520	1.602	10,960	1.522	10,048	1.408	9,312	1.302	8,736	1.223
	D. A.	21,600	2.640	18,816	2.376	16,672	2.200	15,104	1.989	13,120	1.795	12,368	1.718	11,360	1.566	10,480	1.450	9,760	1.338
125 lb. = 74.2° F.	S. A.	19,360	2.587	16,992	2.367	15,200	2.200	13,568	2.024	12,000	1.866	11,360	1 763	10,400	1.646	9,632	1.531	9,040	1.443
	D. A.	22,528	3.010	19,800	2.731	17,360	2.517	15,648	2.302	13,680	2.103	12,832	2.003	11,776	1.857	10,848	1.711	10,080	1.610
145 lb. = 82° F.	S. A.	20,173	2.911	17,632	2.666	15,698	2.464	14,080	2.288	12,526	2.103	11,776	2.015	10,824	1.874	9,984	1.760	9,338	1.660
	D. A.	23,482	3.381	20,400	3.037	18,080	2.837	16,224	2.619	14,242	2.390	13,328	2.288	12,200	2.112	11,216	1.975	10,435	1.855
165 lb. = 89° F.	S. A.	20,872	3.227	18,272	2.966	16,237	2.746	14,624	2.552	12,947	2.361	12,192	2.259	11,184	2 114	10,336	1.989	9,643	1.685
	D. A.	24,325	3.761	21,184	3.452	18,752	3.171	16,800	2.930	14,758	2.691	13,824	2.572	12,637	2.388	11,616	2.241	10,802	2.112
185 lb. = 96.5° F.	S. A.	21,586	3.543	18,880	3.265	16,779	3.027	15,152	2.823	13,379	2.617	12,624	2.514	11,550	2.352	10,688	2.218	9,957	2.107
	D. A.	25,238	4.143	22,016	3.784	19,440	3.508	17,376	3.238	15,288	2.992	14,320	2.860	13,082	2.668	12,016	2.506	11,176	2.365
205 lb. = 101.4° F.	S. A.	22,315	3.858	19,520	3.555	17,354	3.307	15,680	3.089	13,808	2.871	13,040	2.763	11,920	2.587	11,008	2.446	10,272	2.329
	D. A.	26,179	4.526	22,816	4.136	20,144	3.843	17,936	3.552	15,824	3.291	14,816	3.144	13,534	2.939	12,400	2.763	11,555	2.619
225 lb. = 107.2° F.	S. A.	23,120	4.173	20,160	3.854	17,920	3.603	16,192	3.353	14,240	3.142	13,472	3.010	12,320	2.851	11,360	2.679	10,592	2.587
	D. A.	27,154	4.910	23,616	4.495	20,800	4.173	18,528	3.854	16,320	3.590	15,328	3.425	13,920	3.238	12,800	3.027	11,840	2.886
245 lb. = 112.5° F.	S. A.	23,840	4.485	20,768	4.136	18,400	3.872	16,736	3.608	14,720	3.397	13,888	3.247	12,720	3.098	11,712	2.904	10,880	2.816
	D. A.	28,000	5.280	24,448	4.831	21,520	4.506	19,072	4.162	16,832	3.872	15,840	3.714	14,400	3.502	13,184	3.291	12,288	3.188

al of the machine or at the shaft for direct connected machines. For belt ge of belt.
multiply these figures by percentages in table below.
ered to the apparatus operated by the machine at the temperatures given:

Temperature, water, Fahr. degrees	50°	60°	70°	80°	90°
Tons of refrigeration per ton ice	1.46	1.53	1.60	1.67	1.74
Refrigeration work, per cent based on 70° water = 100 per cent	91½	96½	100	104⅛	108¾

TABLE 8

POWER REQUIRED PER TON OF ICE AT DIFFERENT CONDENSING PRESSURES

S. A. Compressors—20-Lb. Evaporating Pressure

Condensing pressure	85 lb.	105	125	145	165	185	205	225	245
Hp. per ton of ice	1.162	1.408	1.646	1.874	2.114	2.352	2.587	2.851	3.098
Per cent power: 185 lb. = 100%	49	60	70	80	90	100	110	121	131

It is assumed that the feed water is drawn from a sump in which the cooling water from the steam condenser and distilled water cooler is collected.

From steam condensers, 3.00 gals. per min. × 151 = 453.0

From water cooler, 1.30 gals. per min. × 85 = 110.5

4.30 563.5

$\frac{563.5}{4.30}$ = 131° average temperature, and allowing 21° loss by radiation the final temperature is 110° F.

To raise the temperature of the feed water from 110° to 210° F. requires:

105 × (210 − 110) = 10,500 B.t.u. per hour. One lb. of exhaust steam on condensing at atmospheric pressure gives up 971 B.t.u. (latent heat).

$\frac{10,500}{971}$ = 10.8 lb. nearly, will be condensed out in the feed-water heater, leaving 105 − 12 or 93 lb. per hour to pass to condenser for distilled water. The amount of distilled water required per ton ice-making capacity per hour is $\frac{2000}{24}$ or 83.3 lb. + 10 per cent for waste = 92 lb.

The above figures serve to illustrate the fact that barely enough condensed steam is ordinarily available when the condensing water is not required to be pumped to furnish sufficient distilled water.

To evaporate 105 lb. water per hour from and at 210° F. into steam at 100 lb. gage pressure requires:

105 × [880 + (339 − 210)] = 105,945 B.t.u. per hour. With an average combined efficiency of 60 per cent. for boiler and grate, and using a coal having a heat value of 13,500 B.t.u. per lb., gives:

$$\frac{105,945}{13,500 \times 0.60} = 13 \text{ lb. coal per ton ice-making capacity per hour.}$$

13 × 24 = 312 lb. per ton per 24 hours or $\frac{2000}{312}$ = 6.4 tons ice per ton of coal.

In case the condensing water must be pumped the additional load on the boilers should be provided for.

TABLE 9

DIMENSIONS OF DISTILLED WATER STORAGE TANK

Tons Ice Capacity	Length, Feet	Width, Feet	Height, Feet	Feet 2" Exp. Pipe	Size Water Pipe, Inches
10	10	2½	3½	58	1
20	11	3½	4	145	1
30	12	4½	4½	218	1¼
40	12	4½	5½	290	1½
50	14½	4½	5½	363	1½
75	25	4½	5½	544	2
100	17	7½	5½	725	2½

FIG. 6. PLAN OF CAN-ICE PLANT.

built

FREEZING TANKS

FIG. 7.

The following figures (Table 10) are based on the use of the standard 300-lb. cans, 11″ x 22″ x 45″; depth of tank, 4′–0″:

TABLE 10

DIMENSIONS OF FREEZING TANKS

Number Cans, Wide or Long	Width	Length
6	9′–0″	16′–6″
8	11′–3″	20′–9″
10	13′–9″	24′–9″
12	16′–3″	29′–0″
14	18′–6″	33′–0″
16	21′–0″	37′–3″
18	23′–6″	41′–3″
20	25′–9″	45′–6″
22	28′–3″	49′–9″
24	30′–9″	53′–9″
26	33′–0″	58′–0″
28	35′–6″	62′–3″
30	38′–0″	66′–3″
32	.....	70′–6″
34	.....	74′–6″

Thus, for a 30-ton plant with 14 cans per ton, a total of 420 cans is required. If the tank is made 20 cans wide it must be $\frac{420}{20} = 21$ cans long. The size of tank would therefore be 25′ 9″ wide x 47′ 7″ long. At least 10 inches must be allowed for insulation for sides and ends.

TABLE 11

DIMENSIONS OF CONDENSED DOUBLE-PIPE WATER COOLERS

(*York Mfg. Co.*)

Tons Ice Capacity	Length Over All	Pipes High 1¼″ and 2″ Pipes 4″ on Centers
2	18	1
3	18	2
5	18	2
8	18	3
10	18	4
15	18	6
20	18	8
25	18	10
30	18	12

TABLE 12

DIMENSIONS OF CHARCOAL FILTERS

(*Frick Mfg. Co.*)

Tons Ice Capacity	Number	Diameter, Inches	Height, Inches	Bushels of Charcoal Each
1	1	24	48	10
2 to 4	2	24	48	10
5	2	24	60	13
8	2	30	48	14
10	2	30	60	17
15	2	30	60	17
20	2	30	60	17
25	2	36	48	20
30	2	36	60	26
40	3	30	60	17

Fig. 4.

TABLE 13

DIMENSION OF STEAM CONDENSERS

Atmospheric Type

Tons Ice Capacity	Number Coils	Number Pipes, High	Length Coil	Weight, Pounds
2	1	6	7	500
4	1	12	7	900
6	1	12	10	1,050
10	1	12	16	1,400
15	2	12	12	2,300
20	2	12	17	2,900
25	2	12	20	3,200
30	3	12	16	4,200
40	3	12	20	4,500
50	4	12	20	6,400
60	5	12	20	8,690
75	6	12	20	9,800
100	8	12	20	12,300

TABLE 14

DIMENSIONS OF REBOILERS

(Frick Mfg. Co.)

Tons Ice Capacity	Length Tank
1– 6	3′–6″
8–12	7′–0″
15	10′–6″
25	13′–9″
50	20′–6″
100	23′–9″

NOTE.—All tanks 80 inches wide by 18 inches high.

TABLE 15

DIMENSIONS OF STEAM CONDENSERS

(Frick Mfg. Co.)

Tons Ice Capacity	No. of Coils	Length, Ft.
5	1	15
10	2	15
20	4	15
50	9	15
100	17	15

NOTE.—Eight pipes high.

FIG. 9.

TABLE 16

APPROXIMATE DIMENSIONS OF CAN-ICE PLANTS (See Fig. 9)

Cap. Tons Ice	Inside Dimensions in Clear									Ice Tank		Boilers (No Spares) H.P.
	A	B	C	D	E	F	G	H	I	No. Cans*	Size	
6.....	10′–0″	14′	12′	12′–0″	30′	41′	16′–0″	24′	10′–0″	96–8x12	11′–3″x29′–0″	1– 25
10.....	14′ 0″	20′	20′	13′–6″	35′	41′	16′–0″	24′	10′ 0″	156–13x12	17′–3″x29′ 0″	1– 35
15. .	18′ 0″	31′	22′	14′ 6″	38′	39′	16′–0″	34′	10′–0″	242–22x21	28′–3″x27′–0″	1– 45
20.....	22′–0″	28′	22′	14′–6″	40′	49′	16′ 0″	40′	10′–0″	320–20x16	25′–9″x37′–3″	1– 80
25.....	22′ 0″	24′	27′	15′ 0″	40′	57′	18′–0″	44′	10′–0″	400–20x20	25′–9″x45′–6″	1–100
30.....	26′–0″	33′	28′	30′–0″	40′	57′	20′–0″	50′	12′ 0″	480–24x20	30′ 9″x45′–6″	1–125
40.....	26′–0″	33′	29′	30′ 0″	40′	72′	22′–6″	67′	12′–0″	648–24x27	30′–9″x60′–0″	1–150
50.....	46′–0″	55′	29′	30′–0″	40′	57′	22′–6″	39′	15′–0″	800–20x20 2	25′–9″x45′–6″ 2	2–100
60.....	50′–0″	65′	29′	30′–0″	40′	57′	23′–6″	47′	15′–0″	960–24x20 2	30′–9″x45′–6″ 2	2–125
75.....	44′–0″	55′	30′	46′–0″	40′	79′	26′–0″	64′	15′–0″	1,200–20x30 2	25′–9″x66′–3″ 2	2–150
100.....	50′–0″	65′	30′	54′–0″	40′	87′	30′ 0″	80′	15′–0″	1,584–24x33	30′–9″x72′–6″	3–125

NOTES.—The above dimensions may be varied to suit local conditions.

The tank sizes given provide for 16 cans per ton capacity.

Ice storage rooms approximately 33 square feet per ton capacity.

* Number of cans wide by number cans long. Standard 300-lb. cans. It is recommended that one spare boiler be installed, in which event "D" must be increased. Insulation 4" corkboard for ice storage room and 10" granulated cork or 6" corkboard for sides and end of ice tank. 6" corkboard for bottom.

Steam condenser and reboiler may be placed on roof over filters. If double pipe NH_3 condenser is used it may be placed in compressor room.

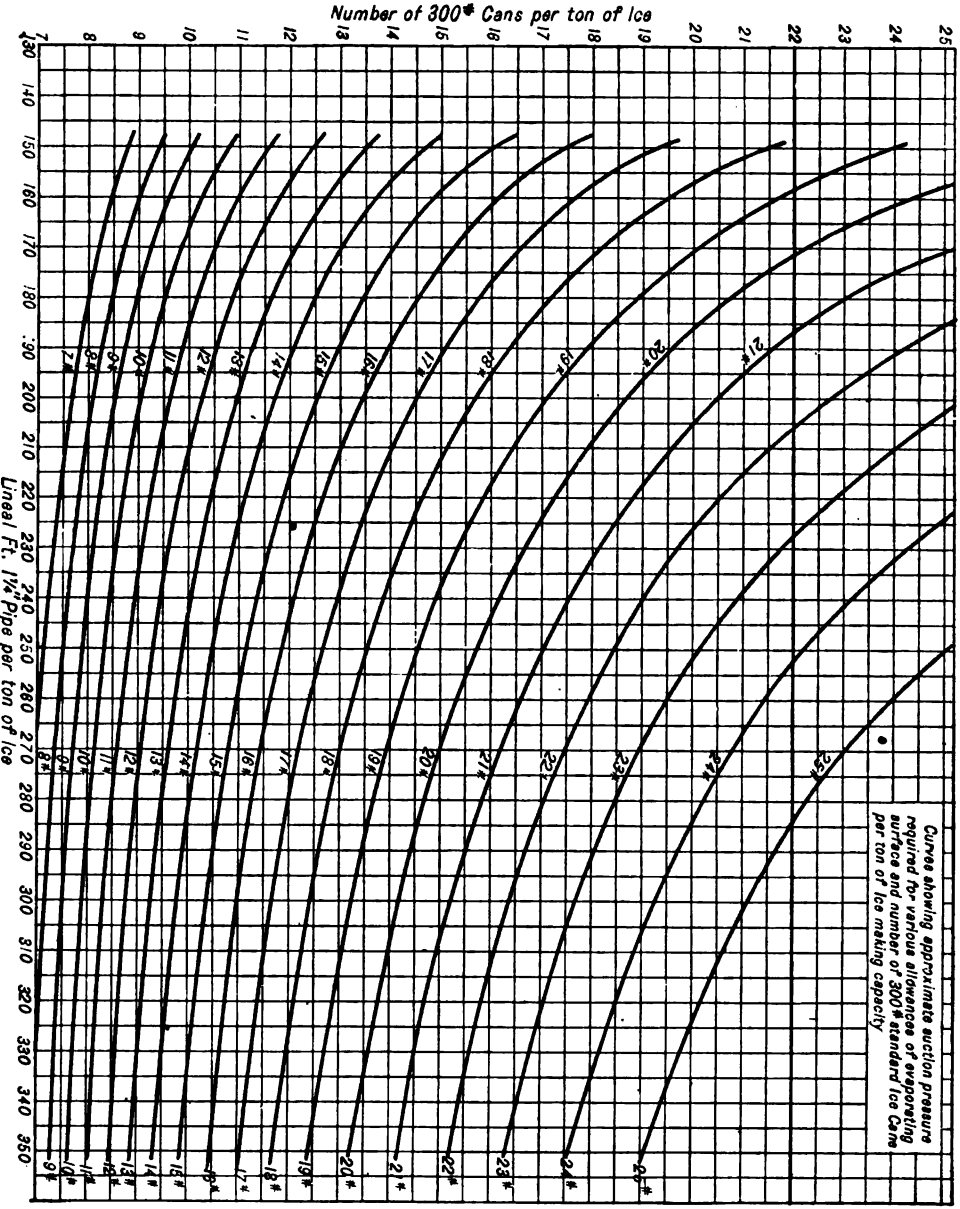

FIG. 10. NUMBER OF CANS PER TON OF ICE FOR VARYING SUCTION PRESSURES AND AREAS OF EVAPORATING SURFACE

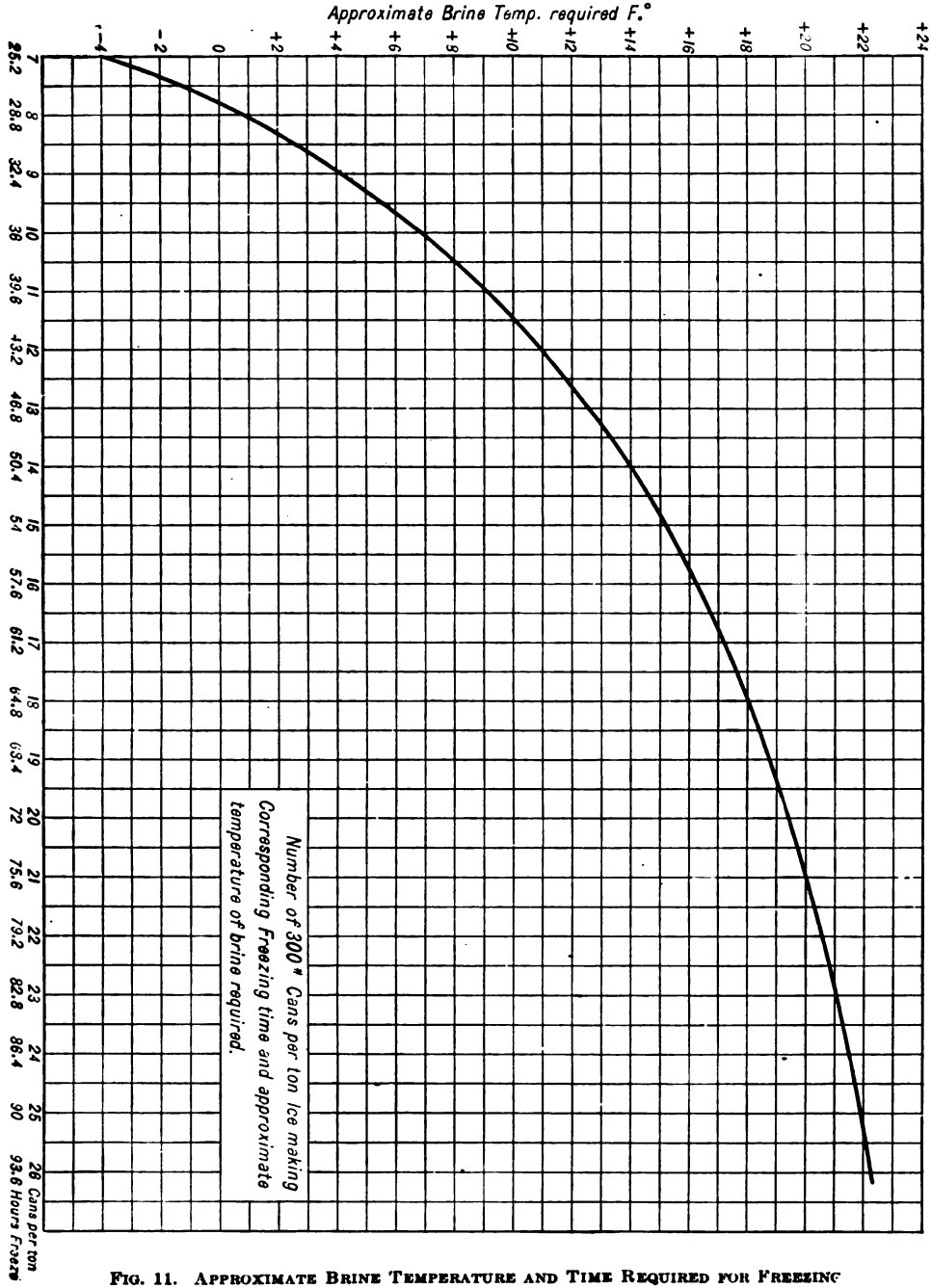

FIG. 11. APPROXIMATE BRINE TEMPERATURE AND TIME REQUIRED FOR FREEZING

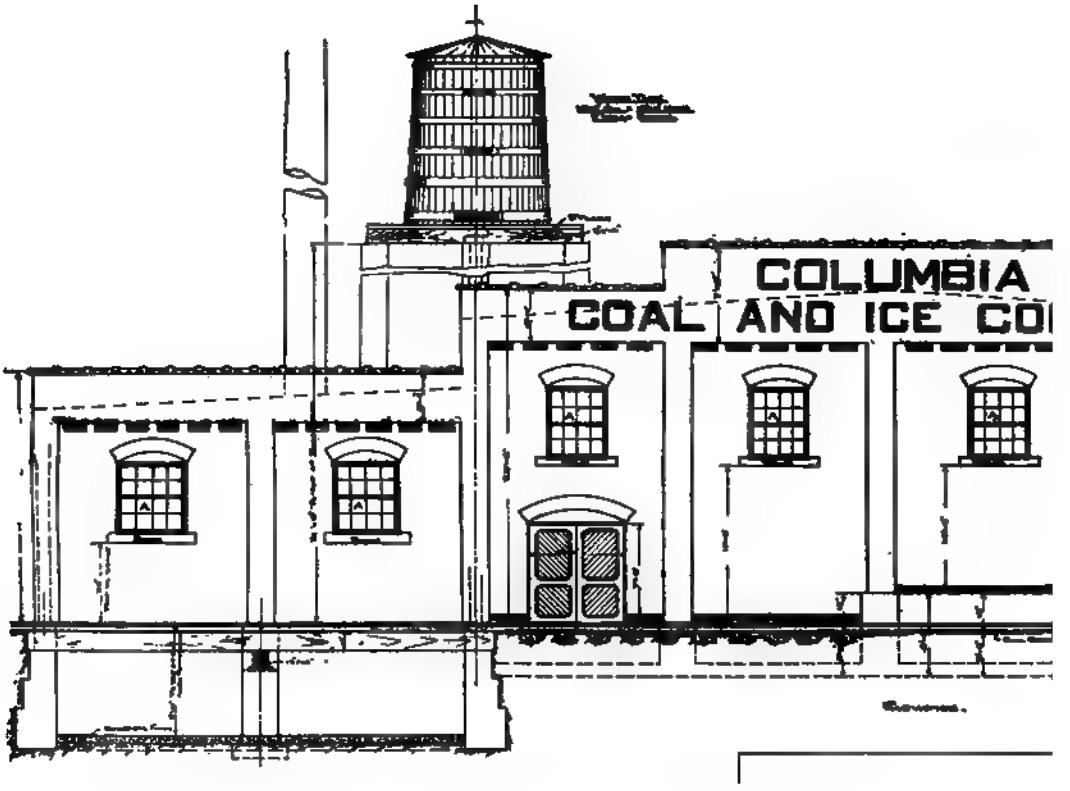
COLUMBIA
COAL AND ICE CO

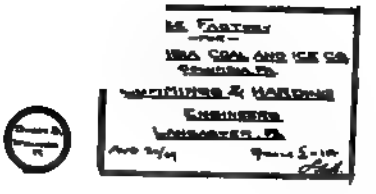

12.

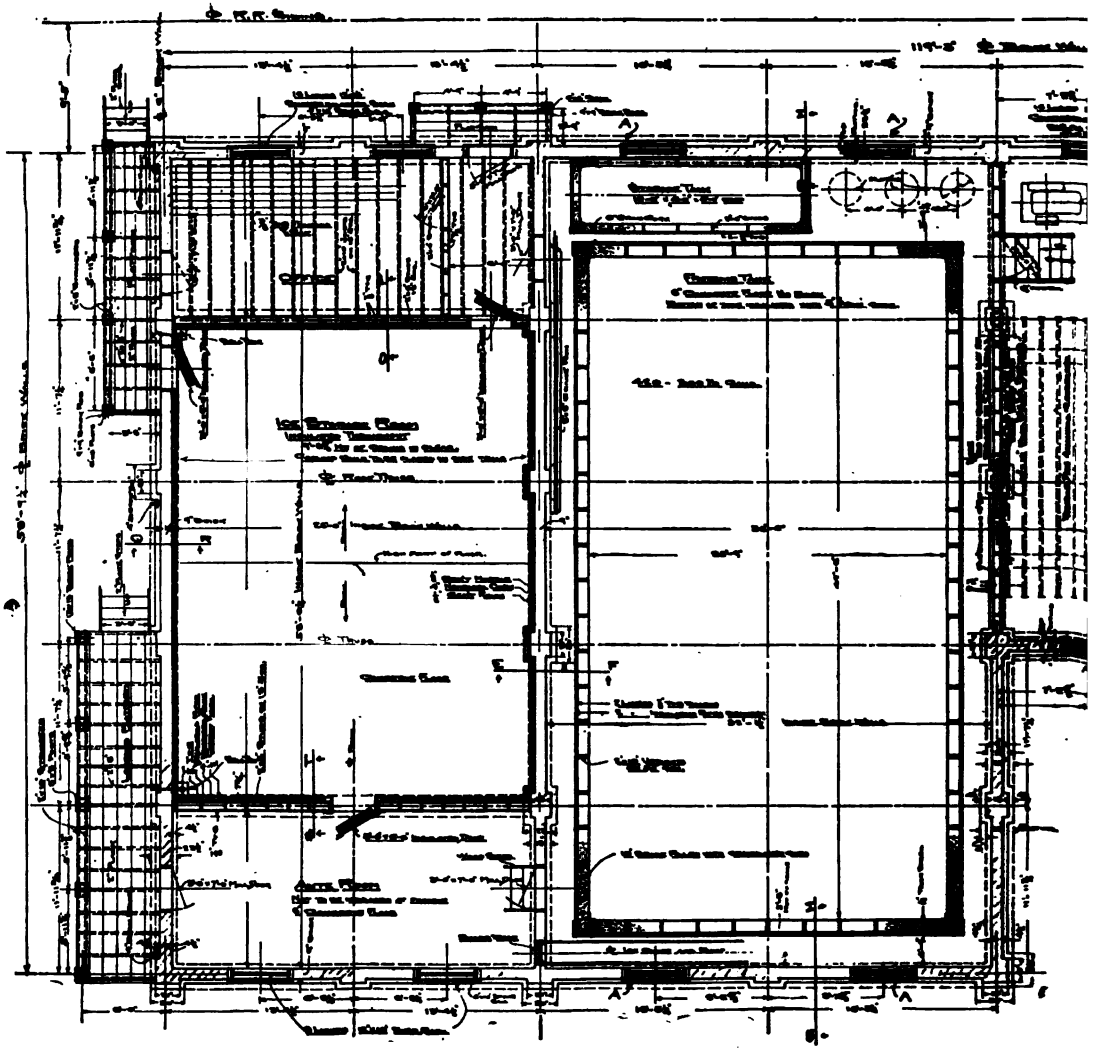

FIG. 1

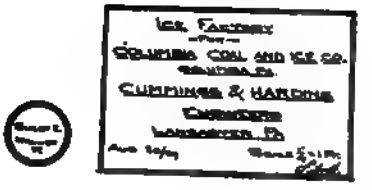
ICE FACTORY
COLUMBIA COAL AND ICE CO.
CUMMINGS & HARDING
CONTRACTORS

INDEX TO VOLUME II

Absolute temperature, 8
Absorber and weak liquor cooler for ammonia absorption plant, 723, 724
Absorption machines, ammonia type, 713 to 728
  heat of, 719
  plant, 722
    ammonia, piping diagram, 727
    diagrammatic layout, 714
    steam required, 728
Acceleration, 4
Accessories for steam heating plants, 514 to 524
Adiabatic saturation of air, 442, 443
Admission in steam engines, 229
Air, compressed, flow of, in pipes, 50, 51
    flow through pipes and ducts, 49
    friction pressure loss in pipes, 50
  flow through orifice, 48, 49
  measurement of flow, 48
  properties of, 43, 45
  pump for Westinghouse - Leblanc condenser, 396
    for Westinghouse-Leblanc vacuum refrigeration machine, 698
  pumps for condensers, 419 to 430
    power required, 428
  required for combustion, 68
    theoretical and actual, 66
  space construction, 659
    heat transmission, 650
  spaces and thickness of grate bars, 85
  weight of, 45
Alberger barometric condenser, 402
  boiler feed pumps, 382
  regular volute pumps, 383
  turbine, 311, 312, 326
    pumps, 384
Aldrich, W. S., 254
Alkalinity, feed-water, 220
Allen dense air machine, 672, 674
American ball angle compound engines, 277
    simple engines, 273
  standard for flanged fittings, 480
Ammonia absorption machine, 713 to 728
    machinery, design, 724 to 728
    and water solutions, properties, 714 to 717
  condensers, 700 to 705
    heat transmission, 664 to 667
  superheated and water vapor mixtures, 719, 720
Analysis of feed-water, 228
Anderson steam trap, 521
Angle valves, 494
Angular advance in steam engines, 231
Anthracite coal, 53
Apartment house load curve, 619
Arches for boiler settings, 92, 93
Arctic ammonia compressor, dimensions, 692
Ash conveyors, steam jet, 599
  handling machinery, 598 to 600
  pits and hoppers, 94 to 98
    for chain grates, 96
  removal systems, 97, 98
Atmospheric ammonia condensers, 701
Automatic cut-off valve gear, 229, 232
Auxiliary header, 542

Babcock & Wilcox boiler, 108, 110, 111, 113
Baker, I. O., 179
Balanced double-ported valve, 237, 238
Barometers, 5
Barometric condenser installation with cooling pond, 406
    installations with cooling tower, 405
  condensers, 400 to 405
  pressure, 6
Barrus, G. H., 255
Beaumont, R. H. Co., 601
Bell, J. E., 75
Belting, 606
Bends for headers, 541
  pipe, 470 to 472
Benjamin, C. H., 630
Bernoulli's theorem, 19 to 22
Bituminous coal, 54

Blade design for impulse turbines, 303, 304
Blast furnace gas, 63
Blower engines, 275
Blow-off for boilers, 132, 133
lines, 555, 556
piping, 546
Boiler Code Committee rules for construction of boilers, 122 to 141
compounds and feeders, 224
connections, 102
efficiency, 79
feed lines, specifications, 553, 556
pumps, capacities, 352
horsepower, 75
inspections, 133, 134
leads, 536
room arrangement, 560 to 563
settings. *See* Settings.
units, subdivision, 100
Boilers, 74
heating, settings, 94
types, 100
water-tube, cost, 121, 122
Booth water softener, 226
Box, 450
Boyle's Law, 43
Bradford, L. G., 367
Brake-horsepower of a steam engine, 252
Braun, C. F., 406
Breechings and smoke connections, 167 to 169
Brick chimney design, 181, 182
chimneys, 176 to 188
Brine circulating system, 706 to 712
piping, 710
heat transmission, 667
pumps, 710
solutions, 709
temperatures, can ice plant, 747
British thermal unit, 9
Bros horizontal return tubular boilers, 105, 106, 107
Bucket carriers for coal, 594, 607
elevators for coal and ashes, 581, 589
loss curve for steam turbines, 308
Buckeye-Mobile, 285
Buffalo barometric condensers, 434
Builders' rating, 81, 82
Bulkley barometric condenser, 400 to 405
Bunkers, coal, overhead, 582
Burners for oil fuel, 63

Cahall vertical water-tube boiler, 115
Calcium chloride brine, 709
Calibration of thermometers, 7
Calorie, 9
Calorimeter, 10
Mahler bomb, 56, 57
separating, 36
throttling, 31, 33, 35, 36
Can allowance and its effect on horsepower requirements, 736
ice plant dimensions, 745
layout, 740
ice plants, water required, 736, 737
system, ice plant, 729, 730
Cannel coal, 54
Capacity, boiler, 80
Caps for pipe, 474
Carbon dioxide readings alone unreliable, 72, 73
Carpenter, R. C., 40
Carrier, W. H., 444
Causticity, feed-water, 220
Center crank engine, 230
Centigrade thermometer, 7, 8
Centrifugal pumps, 359 to 376
Chain grates, 146
Charles' Law, 44
Chemical treatment of feed-water, 221
Chimney sizes, Kent's formula, 166
Chimneys, brick, 176 to 188
concrete, construction and installation data, 194, 195
for natural draft and Taylor stokers, 196
for power boilers, 159 to 195
radial-brick, specifications and cost, 182 to 188
Clausius cycle, 263
Clearance in steam engines, 239
Closed feed-water heaters, 216, 219
Coal analysis, 55, 56
and ash handling machinery, 580 to 614
and oil as fuel, comparison of, 62, 63
bunkers and bins, 583
formation and composition, 52
handling installations, 600, 601
Coals, heat values, 129
Cochrane feed-water heater and meter, 209, 210
Coefficient of conduction, 14
of expansion, 13
of speed regulation, 236
Coke, 55
oven gas, 64
Cold air circulation systems, 659, 660
machines, 672 to 674

Cold storage, cost of operation, 669
heat transmission of walls, 643, 651
room for hotel, 661, 662
for small plant, 663
space, required, 641
temperatures, 642
walls, construction details, 651 to 654
Columns, pipe, 520
Combined efficiency, 254
Combustion, 52, 65
rate, 84
reactions, 65
Compound direct-acting steam pumps, 355 to 359
engines, 258 to 263
Compression of perfect gases, 47
in steam engines, 231
Compressors, ammonia, calculations, 688, 689, 691
dimensions, 692 to 694
displacement and horsepower, 689
single, and double-acting compared, 688
sizes and capacities, 688
Concrete chimneys, 189 to 195
specifications and cost, 192 to 194
Condenser for ammonia absorption plant, 723
pumps, characteristic curves, 418
Condensers, ammonia, 700 to 705
rating, 702 to 705
circulating pumps, 416
cooling water required, 413, 414
eductor type, 397 to 399
effect on efficiency of engine or turbine, 387 to 389
rectangular rain type, 390, 393
steam, 386 to 440
air pumps, 419 to 430
amount of air to be removed, 423 to 426
dimensions, 432 to 440
for ice plants, 744
installation equipment, 435
loss of head, 419
power for auxiliaries, 427 to 431
pump capacity, 426
tests, 431
surface, cylindrical, 408
required, 411
type, two-pass, 407
tests, 415, 416
Condensing water for ammonia condensers, 700
Conduction of heat, 13
Conductivity, 646, 647
Continuous insulation, 655, 657
Convection, 643 to 645
of heat, 14
Conveyors, ash, 598
coal, horsepower, 591, 592
Conway Building power plant, 574
Cooking, steam required, 624, 625
Coolers, water, for ice plants, 742
Cooling effect in towers, 456, 457
pond area, 455
tests, 452
ponds and towers, 441 to 464
tower calculations, 461, 462
fans, 463
power requirements, 461
tests, 459
towers, 456 to 464
installation data and cost, 464
specifications, 462
Copes water regulator for feed pump, 545
Cork partitions, 654, 657, 658
Corkboard, heat transmission, 652
Corliss engine, 238 to 242
engines, 279 to 281, 283
valve gear, single eccentric, 239 to 242
Corthell, E. C., 179
Covering, pipe for water and brine lines, heat losses, 668
specification, steam piping, 559
Cox, O. L., 306
Cox's formula, flow of water, 22
Cranes for handling coal, 580 to 582
Cross valves, 494
Crosses, screwed, 474
Crushers, coal, 583
Curtis non-condensing turbines, 296
turbine, 312, 313, 315, 330
Custodis perforated radial brick chimney, 176
Cut-off at normal rating for steam engines, 257
governing, 234
in high-pressure cylinder of compound engines, 262
in steam engines, 229
Cycle of the Allen dense air machine, 673, 674
Cylinder dimensions for compound engines, 260
sizes for simple engines, 255, 256

Dalton's law, 424, 425, 441
Damper regulators, 132
for power boilers, 524

Dash-pot, Corliss engine, 241
Dean Bros. duplex pumps, 358, 359
Dean, F. W., 637
De Laval impulse turbine, 301 to 310
multi-cellular turbine, 323
turbine performance curves, 299
Demand factor, 615
Depreciation of central stations, 617
Dew-point temperature, 442
Diagram factor, 250
Dickson, E. D., 334
Dime Savings Bank plant, 621
Direct expansion and brine circulating systems compared, 711, 712
Distilled water storage tanks, for ice plants, 739
Distilling system, ice plant, 729, 732
Double-pipe ammonia condenser fittings, 704
condensers, 701, 702
-ported valve, 238
Draft, 74
gages, 164
loss in flues and chimneys, 160 to 164
mechanical, 196 to 207
produced by a stack, 159
required to burn coal, 163
Drainers, cellar, automatic, 522
Drips for piping systems, 549, 550
Dry-air pump capacity, 426
pumps for condensers, 419 to 430
Dry-bulb thermometer, 445
Du Long's formula, 60
Duplex steam pump, 348, 349
Durley's formula for orifices, 49
Dutch oven setting, 91, 93, 102

East Woburn Station, detailed costs, 634 to 637
Economical loads for boilers, 99
Economizer dimensions, 158
draft loss, 155, 158
increase in feed-water temperature, 151
performance, 151 to 155
Economizers, 148, 158
Edgemoor water-tube boiler, 116
Edwards air pump, 420
dimensions, 436
Efficiency, boiler, 79
combined, 79, 80
Ehrlich, M. W., 360
Elbows, screwed, 476
Electrical power transmission, 617
units, 12
Elevators, coal, centrifugal discharge, 587
Elevators, coal, horsepower, 590
perfect discharge, 588
conveyor, for coal, 592 to 598
for handling coal, 586 to 589
Energy, 4
Engine and turbine set, 331 to 333
driven generating sets, 292
leads, 537
room arrangement, 562, 564
Engines for direct-connected service, 273
steam, 229 to 294
angle compound, 277
compound, 258 to 263
high-speed, 278
consumption, 268 to 271, 276
Corliss, 279 to 281, 283
cross-compound, 281
four-valve, prices, 294
simple four valve, 276, 277
single valve, 272 to 275
specifications, 287 to 292
tests, 271
types and selection, 271 to 285
unaflow, 283 to 287, 289
Entropy, 30
Entry loss in pipes, 345, 346
Equivalent evaporation, 78
per square foot of heating surface, 81
Evaporating coils for ammonia absorption plant, 723
Evaporative power of coal, 86
Exhaust lines, specifications, 553
steam available for heating, 214
piping, 542 to 549
Expansion curve, theoretical and actual, for steam engine, 246
joints, 472, 473
of perfect gases, 47
of piping, 469, 470
of solids, 13
Expansive use of steam, 247

Factor of evaporation, 78
of safety, boilers, 125
Fahrenheit thermometer, 7, 8
Fan draft, 197
engines, 275, 276
Fans and power required for forced draft, 202 to 205
for cooling towers, 463
Federal building equipment, 629
Feed pipe for boilers, 132

Feeder for elevator system, coal, 586
Feed-water analyses, Mayport, Fla., 228
heaters, 208 to 228
cost, 219
dimensions, 212, 213
specifications, 215, 218
heating, economy, 209, 211
in condensing plant, 211
piping, 542 to 549
purification, 220 to 228
regulators, 544, 545
temperatures, 81, 210
treatment, 220 to 228
Fehl, C. D., 708
Filters for ice plants, 742
Fire point, 62
Fischer, W. F., 538
Fisher, E. C., 83
Fittings, flanged, 480 to 486
special, 483, 487
for horizontal return tubular boilers, 102
for pipe, 474, 475
reducing, 478
screwed, 475 to 480
space required by, 478, 479
Flanges, for wrought pipe, 485, 488 to 491
methods of facing, 488, 489
Flash point, 61
Flight conveyors for coal with scrapers, 590, 591
Flooded ammonia condenser, 705
Flow of steam in pipes, 37
of water in pipes, 18, 385
Flue gas analysis and composition, 68 to 71
calculations, 71
heat lost in, 69
temperatures, 159, 160
weight of, 69
Flywheels for steam engines, 244
Foaming in boilers, 224
Foot-pound-second system, 3
Foot valve for pumps, 378
Force, 4
Forced draft for large plants, 200, 201
Foster automatic non-return valve, 535
Foundation for self-supporting steel stack, 171, 174 to 176
Foundations for brick chimneys, 179, 180
Four-valve engines, simple, 276, 277
Frame walls, insulation, 654, 656
Frank, E., 371
Freeman, J. R., 346
Freezing mixtures, 670
Freezing tank plate ice plant, 731, 733
sizes, 733, 741, 742
tanks, insulation, 654
time, can ice plant, 747
Friction head due to flow of water, 18, 22
in surface condensers, 419
loss in pipe lines, 385
in flues and stacks, 160 to 164
loss in brine piping, 710
in cast-iron pipes, 343, 345
in elbows, 344, 345, 346
in fittings and valves, 346
pressure loss chart for flow of water, 23, 24
Fuel consumption for heating service, 65
in steam power plants, 285 to 287
Fuels, 52
all kinds, average heat values, 128
Furnace design for smokeless combustion, 88
volume, 86
Furnaces, boiler, 88 to 94
Fusible plug, 103
plugs, type and location, 131, 132

Gages, pressure, vacuum and draft, 5
steam, 132
Gas engines with producers compared with steam engines and turbines, 638
Gaseous fuels, 63, 64
Gases, density of, 65
specific heat of, 45
thermal properties of, 46
Gas power plant equipment, 630 to 633
temperatures in boiler practice, 75
Gate valves, 492, 493
Gates for spouts to stokers, 585
Gear teeth, 611
Gearing calculations, 612 to 614
layout, 613
Gears, 610, 611
Gebhardt steam flow meter, 42
Generating sets with four-valve engines, 294
units, size and division, 628
Generator for absorption plant, 721
Generators, alternating and direct current, speeds, 256, 257
Globe valves, 494
Golden-Anderson stop valves, 532, 535
Goulds centrifugal pumps, 377 to 379
Governor, throttling, 230, 233
Governors, steam engine, 233 to 242
Grashof's formula, 410
Grate area, 74, 84

Grate bars, 84
Grates, hand-fired, 85, 86
rocking, 84
Green chain grate stoker, 146, 147
fuel economizer, 150
Greene, A. H., 666
Guaranteed performance of steam engines, 290
Gueth, O., 667
Gulfport and Mississippi Traction Co. plant, 156
Guyed stacks, 169

Hangers, pipe, 514 to 520
adjustable, 517 to 519
Hale, R. T., 142
Hardness, feed-water, 220
Hausbrand, E., 666
Hawkins, G. C., 551
Hazen-Williams formula, 385
Heads, exhaust, 522
static, pressure, velocity and total, 339 to 342
Headers, steam, 526 to 532, 540
Heat, 7
content of steam, 30
drop in Curtis turbine, 316
exchange diagram, 445
exchanger, coefficients for refrigeration, 666
measurement, 9
of absorption, 719
of combustion for coals used in the United States, 129
of a fuel, 56
for various fuels, 128
transfer in ammonia absorption plant, 720 to 724
in boiler tubes, 74, 75
in condenser tubes, 411, 412
transmission calculations for cold storage walls, 647 to 650
coefficients for insulated walls, 652
of cold storage walls, 643, 651
of pipe, coefficients for all services, 667
of refrigeration piping, 665 to 669
tests, 650, 651
value based on fixed carbon, 59, 60
of anthracite coals, 57
of bituminous coals, 58
of fuels, high and low, 58
of gaseous fuels, 60, 61
of Illinois coals, 59
Heating surface and steam generated, 77
boiler, 74, 81
return tubular boilers, 82
Heine boiler, 111, 112, 116, 117
superheater, 149
Helander barometric condenser, 404
Herter, C. H., 667
Holly steam loop, 550, 551
Hook gage, flow of water, 26
Hoppers, ash. *See* Ash-pits.
Horsepower, 4
boiler, 75
Hotel equipment, mechanical and electrical, 622, 623
Humidity records in various cities, 450, 451
relative and absolute, 441
Hydrostatic pressure tests for boilers, 134

Ice cans, sizes, 733
cost per ton to manufacture, 735
handling and storage, 743
-making capacity of refrigerating machines, 639
manufacturing plants, 729 to 747
plants, dimensions, 745
plants, brake-horsepower per ton capacity, 738
fuel consumption, 737
storage room, 735
Impulse turbines, 301
-reaction turbines, 318, 322
turbines with single pressure and three velocity stages, 311
with velocity stages, 310
Indicated horsepower, 252
Indicator card from an Atlas engine, 251
diagrams, combined, 259
for steam engines, 247
Induced draft, 205 to 207
Inertia governor, 235
Initial pressures for steam engines, 257
Inspections, boiler, 133, 134
Insulation of floors and ceilings, 655
Internally fired boiler, 103, 104, 109
Isolated power plant data, 615 to 629

Jacksonville municipal electric light plant, 578, 579
Jacobus, D. S., 82
Jeffrey coal-handling equipment, 604, 605
Jelinck, 666
Jenkins Bros. automatic valve, 532, 535

Jet condensers, 390 to 405
Johnson, J. E., Jr., 51
Johnson's formula for compressed air, 51
Joints, riveted, efficiency, 134 to 141
Jones underfeed stoker, 143, 144
Joule, 11

Kellog copper bellows expansion joint, 473
Kellogg, M. W., Co., 182 to 188
  radial brick chimneys, 177 to 188
Kent, Wm., 165
Kerr turbine, 328
Kilowatt, 12
Kindling temperatures, 65
Koerting eductor condensers, 397 to 399; 434

Lamphrey fronts, 132
Lap, steam and exhaust, in steam engines, 231 to 233
La Salle Hotel power plant, 565
Latent heat, 12
Layout, boiler and engine room, 560 to 563
Leads, boiler and engine, 531 to 538
Leblanc air and condensation pump, 421, 422
Levey, J., 703
Lichty, L. C., 645
Lignite, 54
Lime process for feed-water, 221
Line shafting, 609
Link Belt Co., coal-handling machinery, 585 to 598
Liquor to be circulated in absorption machines, 719
Load curves for typical plants, 618 to 619
  factor, 615
  variation for an office building, 629
  variations for boilers, 99
Locomobile steam plants, 285, 291, 293
Loop header system, 528, 534
Loss of head, flow of steam, 38
  flow of water, 25
Lumber Exchange Building power plant, 566

Machine or mechanical efficiency, 253
MacIntire, H. J., 713, 714 to 717
Mahler-Bomb calorimeter, 56, 57
Mains, steam, size based on velocity, 538, 539
Malleable iron fittings, 478
Manning vertical fire-tube boiler, 115, 121
Masonry walls, insulation, 653
McAlpin Hotel equipment, 622
McCormick Building power plant, 564
Mean effective pressure, theoretical and actual, 247 to 250
  pressures for compound engines, 261
Mechanical draft, 196 to 207
  equivalent of heat, 11
Mechanism of the reciprocating engine, 229 to 233
Melting points, 13
Meter, steam, specification, 558
Miller, E. F., 160
Mixed, pressure turbines, 334 to 338
Mixtures of air and saturated water vapor, tables, 446 to 449
  of superheated ammonia and water vapor, 719, 720
Mollier chart, 302
Mollier, H., 713, 714 to 717
Monnett, Osborn, 88, 101
Motor efficiencies, 254
Mullen vacuum pump, 421
Multi-jet condensers, 440

Napier's formula, 40
National Board of Fire Underwriters, 653
Natural gas, 64
Non-return valve, 103, 535
Nordberg uniflow engine, 289
Nozzle loss curve for steam turbines, 309
  for steam turbines, 302

Office building equipment, 620, 621
  load curve, 618
  power requirements and equipment, 626, 627
Oil fuel, 61
Open heaters, 209
Orrok, G. A., 409, 423
Orsat apparatus, 69, 70
Otis closed feed-water heater, 214, 215
Outside packed pumps, 351
Overload capacities for steam engines, 257

Packed piston pumps, 351
Parker down-flow boiler, 112, 120, 121
Parsons type turbines, dimensions, 324
Peabody, C. H., 40
  oil burner, 62, 63
Peak loads in boiler practice, 99
Peat, 55
Peck carriers for coal, 594 to 598, 602
Peclet, 643

Penn Central Power and Transmission Co. power plant, 568 to 571
Perfect gases, laws of, 44, 47
Petroleum, 61, 62
Physical units, 3
Piezometer, 18
Pipe bends, 470 to 472
  bursting pressure, 467
  commercial classification of, 465, 466
  extra strong, 466
  hangers, 514 to 520
  outside diameter, 466
  tests of, 467, 468
  threading, 467
Piping details, 541
  expansion, 469, 470
    for brine tanks, 735
  specifications, 551 to 559
  systems, high pressure, 525
Piston speeds for steam engines, 246
Pitot tube for measurement of flow of water, 18, 28
Pittsburgh pipe hangers, 516
Plant tests of steam engines, 291, 292
Plate system, ice plant, 729, 731
Plugs for pipe, 474
Ponds, cooling, 450 to 456
Potential efficiency, 267, 268
Potter, A. A., 630
Power, 4
  factor, 255
  itemized costs, 617
  of a steam engine, 252, 253
  plant costs in detail, 634 to 637
    design, economic principles, 616
    equipment, 570, 577
    piping, 525 to 559
  plants, arrangement, 560 to 579
    comparative costs of three types, 637 to 638
    installation data, 570, 577
  pumps, 349
  requirements and division of units, 623
  transmission, 617
Prat system of induced draft, 206, 207
Pressed fuels, 55
Pressure, 5
  equivalents, pumps, 339
Priming in boilers, 224
  centrifugal pumps, 383
Prony brake, 252
Proximate analysis of a fuel, 55
Psychrometer, 444
Psychrometric chart, 445
Pumping water, cost, 385
Pumps, 339 to 385
  boiler-feed, 352
    with Terry turbine, 380
  brake-horsepower, 355
  brine, dimensions, 711
  centrifugal, 359 to 376
    efficiency, 360, 361, 370
    electric drive, 383
    rating, 374, 375
    tests, 371 to 376
    theory, 363 to 370
    turbine type, 361
  circulating for condenser practice, 416 to 419, 431
  foot valve and strainer, 378
  foundation, 376, 380
  installation data, 376 to 384
  loss in head through same, 345
  method of packing, 351
  piping in general, 376, 382
  power, 349
    Goulds, dimensions, 381
    mechanical efficiency, 351
  pressure loss in connections, 343 to 346
  reciprocating, 350
    installation data, 376
  steam, compound direct-acting, 355 to 359
    direct-acting, 347
    duplex, 348, 349
      dimensions, 358, 359, 360
    duty, 357
    percentage of steam used, 353, 354
    simplex, 347
    size of steam cylinders, 355
    tests, 353
  suction pipe, 377, 382
  turbine, steam consumption, 376
  vacuum chamber, 378
  volumetric efficiency, 350
Pyrometers, 8

Quality of steam, 30

Radial brick chimneys, 176 to 188
Radiating power, 14, 15
Radiation, 643 to 645
  constants, 644
  of heat, 14, 15

Radiation, test from surface of cooling reservoir, 454
Railroad Commission of Wisconsin, 615
Rankine cycle, 263
Rateau mixed-pressure turbine, 333
regenerator for turbines, 337
turbine, 311, 313
Rating, boilers, 81
of boilers for classification, 133
Ratio of expansion in steam engines, 245
of heating surface to grate area, 85, 86
Raw water ice plants, 733, 735
Reaumur thermometer, 7, 8
Reboilers for ice plants, 744
Rectifier for ammonia absorption plant, 721, 723
Refrigerating effect, 639
load, 640, 657
Refrigeration, 639
dense air machines, 672 to 674
methods in use, 670, 671
system, typical installation, 690
Refrigerator prices, 664
tests, 661
Refrigerators, small, 660 to 664
Regenerators for steam turbines, 335, 337, 338
Regina municipal power plant, 575 to 577
Regulation of engine speed, 236
Regulator for feed pump, 544
Reinforced-concrete chimney design, 189 to 192
Relation between efficiency and capacity, 80, 81, 91
gas temperature and heating surface, 77
of engine parts to piston, 243
Release in steam engines, 229
Releasing valve gear, 239 to 242
Requisites for high rates of evaporation, 83
Restaurant equipment, 624, 625
Return tubular boilers, 101, 105
boilers, heating surface, 82, 84
Rice & Sargent engine performance, 331
Rites inertia governor, 236
Riveted boiler joints, 134 to 141
Rivets for steam boilers, 124
Rollers for pipe, 514, 516
Roney overfeed stoker, 143, 144
Rope drives, 607
Rules for construction and installation of steam boilers, 122 to 141

Safety valve, 103
valves, size and capacity, 125 to 130
Salt brine, 709
Saturated air, formula, 441
steam, 28, 30, 78
vapor, 441
Sawdust grate, 85
Schuette and Koerting Co. condenser, operation, 430
-Koerting spray nozzles, 452 to 454
Scotch marine boiler, 103, 109
Self-supporting stacks, 169 to 176
Separators, steam and oil, 520, 522
Settings, boiler, smokeless, 101
for chain grates, 88
for double-inclined stokers, 89
for front-feed stokers, 90
for hand-fired stokers, 91
for heating boilers, 93
for horizontal return tubular boilers, 108
for underfeed stokers, 91
for water-tube boilers, special, 87, 88
Shafting, 607 to 609
Shaving grate, 85
Shipley flooded ammonia condenser, 705
Shipley, T., 735
Shop tests of engines, 290
Simplex steam pump, 347
Single header system, 533
Skinner unaflow engine, 284 to 287
Sling psychrometer, 445
Smoke prevention, 101
Smokeless combustion, 125
Soda process for feed-water, 221
Solutions of ammonia and water, properties, 714 to 717
Speakman, E. M., 318
Specific heat, 10
of food products, 640
of steam, 34
of various subjects, 11
pressure, 6
Specifications for steam boilers, 122 to 141
Speed of gears, 612
variation in steam engines, 236
Spider system of piping, 529, 531
Spouts for coal to stokers, 584, 585
Spray nozzles for cooling ponds, 452
Stacks for horizontal return tubular boilers, 102
Stand pipe, 340
Stanwood, J. B., 243
Station load factor, 615
Steam consumption of engines, ideal and theoretical, 268 to 271

Steam, dry, saturated, and superheated, 78
engine diagrams, 244 to 251
indicator, 246, 247
proportions, 243
engines, piston speed and revolutions, 255, 256
pressures and capacities, 257, 258
standard of performance, 263 to 265
equipment, cost, 630 to 638
flow chart, 40, 41
through orifices, 40
velocities, 538
generation of, 29
headers, 526 to 532, 540
lines, specifications, 552, 555, 556
measurement of flow, 42
properties of, 28
superheated, specific heat of, 31, 34
tables of properties, 31 to 33
used by boiler feed pumps, 353
Steel chimneys or stacks, 169 to 176
Stefan-Boltzman radiation law, 644
Stephens-Adamson Mfg. Co., 589, 592, 603
Stirling water-tube boiler, 114, 118, 119
Stoker classification, 143
Stokers, mechanical, 142
cost, 147
Storage for coal, 580 to 582
Strainer for pumps, 378
Strauss, H. A., 436
Sturtevant, B. F. Co., simple engines, 273, 274
turbine, 324
under-grate blower, 198, 199
Submerged type ammonia condensers, 703
Suction lift, pumps, 342
pressures for brine temperatures, 733
for can ice plants, 746
Superheated steam, 28, 31, 78
Superheaters, 148, 158
net saving, 149
surface required, 148
Surface condensers, 405 to 416

Tandem compound engines, 279, 294
Tanks, brine, 706 to 709
Taylor stoker, 145
Tees, screwed, 476, 479
Temperature of a flue gas, 159, 160
intensity and degree, 7
range in steam engine cylinders, 263
Temperatures, average, as basis for fuel consumption, 65, 66
Temperatures in various cities, 450, 451
Terminal pressures for steam engines, 255
Tests, boiler, 80
Terry turbine, 311, 312
Theory of centrifugal pumps, 363 to 370
Thermal efficiency of engines and turbines, 265 to 268
Thermofeed regulator for boiler feed pump, 544
Thermometers, 7
Thompson, N. S., 629
Threading pipe, 467
Throttle governing, 233, 234
Thyssen entrainment vacuum pump, 422 to 424
Time for freezing with can ice plant, 747
Tomlison barometric condenser, 403
Tonnage of refrigerating machines, 639
required for cold storage rooms, 668, 669
Total head produced by chimney, 161
on a pump, 340 to 342
heat of steam, 78
Towers, cooling, 456 to 464
Track hopper for coal elevator system, 586
Traps, steam, high pressure, 519
Triumph double-acting ammonia compressor, dimensions, 693
ice tank, 734
Tubes, boiler, dimensions,
heat transfer, 75
layout, 138, 139
lap-welded steel, 466
Tupper grate, 85
Turbine or multi-stage pump, 361, 362
Turbines, steam, 295 to 338
dimensions, 324, 327 to 329
loss in blades and guide vanes, 311
low-pressure, 330
mixed pressure, 334 to 338
multi-pressure, multi-velocity stage, 320
reheat factor, 314
theory, 296 to 300
vane speeds, 320
velocity diagrams, 314, 317
water rate, 296, 297

Ultimate analysis of a fuel, 55, 56
Unaflow engines, 283
Unions, screwed, 477
Unit system of piping, 530, 532
Unwin's formula, flow of steam, 37
U. S. Military Academy power plant, 575
Treasury Department specifications, 557

Vacuum machines for refrigeration, 695 to 699
obtainable with condensers, 387, 415
Valve design for steam engines, 231, 232
gear for Skinner engine, 286
Valves, 491 to 506
automatic, 532
blow-off, 549
pressure limitations, 491
safety, 549
stop, 132
Vanstone flange joint, 533
flanges, 486 to 491
Velocity, 4
diagram for steam turbines, 306, 307
head in flues and chimneys, 162, 165
Venturi tube, flow of water, 26
Volute type centrifugal pump, 361, 362

Wainwright closed feed-water heaters, 217
Walworth Mfg. Co., piping specifications, 552 to 559
Water, allowable velocity in pipes, 346, 347
boiling points, 17
column, 103
ejectors or drainers, 523
glass and gage cocks, 132
heat content, 16
horsepower, 353
measurement of flow, 25
piping, specifications, 554
properties of, 16
rate of various types of engines, 268 to 271, 276
relief valve for pumps, 379
softening plant, 225
specific heat, 17
-tube boilers, 103
Water, weight of, 16
Webster Building power plant, 572
Weighton, R. L., 416
Weir, V-notch, 25, 27
Weisbach's formula, flow of water, 22
Weiss counter-current condensers, 432, 433
Wells, J. H., 628
Westinghouse-Leblanc condensers, jet type, 395, 415, 438, 439
vacuum refrigeration machine, 697 to 699
-Parsons turbine, 319
steam turbine, 297, 298
surface condenser installation, 410, 415
condensers, dimensions, 437
two-stage impulse turbine, 322, 327
Wet-air pump capacity, 426
and dry bulb thermometer, 444
-vacuum condenser pump, 408
Wheeler, C. H., Mfg. Co., curves, 414
cooling tower, 458, 459
low-level type jet condenser, 392, 394
surface condenser installation, 409
Willans line, 267
Wolf, F. W., Jr., 669
Work diagram for steam engines, 245
performed in the cylinders of compound engines, 262
Working pressures for steam boilers, 122
Wort, W. E., 355
Worthington fan-draft cooling tower, 460

York absorption machine, 718
Mfg. Co., table of horsepower required for ice making, 738
tests of single-acting ammonia compressors, 687

89088904065

B89088904065A

This book m

RESERVED BOOK FROM
ENGINEERING LIBRARY